State of Oklahoma
Department of Transportation
Procurement Division

Solicitation Cover Page

1. **Solicitation #:** 3450004902 / 20-3-0144

2. **Solicitation Issue Date:** 01/27/20

3. **Brief Description of Requirement:**

Scope of Work: Vendor to manufacture two (2) PEMB bold together Equipment Sheds. ODOT will assemble the structures. Fork lift available at both locations

Vendors shall include a Bill of Materials and Specifications for each equipment shed kit priced.

Location: Delivery to the following locations: 1. Pontotoc County Maintenance Yard - 12844 State Highway 3W, Ada, OK 74820; and 2. Okfuskee County Maintenance Yard, 104 W. Coplin Street, Okemah, OK 74859.

See Attached Scope of Work. Questions may be submitted no later than February 5, 2020, 3:00 P.M.

The Solicitation is in accordance with Oklahoma Statute, Title 74, Section 85.12.B.3.

4. **Response Due Date**[1]**:** 02/19/20 **Time**: 4:00PM CST/CDT

5. **Issued By and Return Sealed Bid To**[2]**:**

U.S. Postal Delivery Address: 200 NE 21st
Room 3C6
Oklahoma City, OK 73105

Common Carrier Delivery Address: Same as above

Electronic Submission Address: N/A

6. **Solicitation Type** (type "X" at one below)**:**

- ☐ Invitation to Bid
- ☒ Request for Proposal
- ☐ Request for Quote

7. **Contracting Officer**:

Name: Cheryl Emerson, CPO
Phone: 405-522-3209
Email: cemerson@odot.org

[1] Amendments to solicitation may change the Response Due Date (read GENERAL PROVISIONS, section 3, "Solicitation Amendments").
[2] If "U.S. Postal Delivery" differs from "Carrier Delivery, use "Carrier Delivery" for courier or personal deliveries.

Responding Bidder Information

"Certification for Competitive Bid and Contract" ***MUST*** *be submitted along with the response to the Solicitation.*

1. **RE: Solicitation #** 3450004902 / 20-3-0144

2. **Bidder General Information:**

FEI / SSN : _____ Supplier ID: _____

Company Name: _____

3. **Bidder Contact Information:**

Address: _____

City: _____ State: ____ Zip Code: _____

Contact Name: _____

Contact Title: _____

Phone #: _____ Fax #: _____

Email: _____ Website: _____

4. **Oklahoma Sales Tax Permit[3]:**

☐ YES – Permit #: _____

☐ NO – Exempt pursuant to Oklahoma Laws or Rules – Attach an explanation of exemption

5. **Registration with the Oklahoma Secretary of State:**

☐ YES - Filing Number: _____

☐ NO - Prior to the contract award, the successful bidder will be required to register with the Secretary of State or must attach a signed statement that provides specific details supporting the exemption the supplier is claiming (www.sos.ok.gov or 405-521-3911).

6. **Workers' Compensation Insurance Coverage:**

Bidder is required to provide with the bid a certificate of insurance showing proof of compliance with the Oklahoma Workers' Compensation Act.

☐ YES – Include with the bid a certificate of insurance.

☐ NO – Exempt from the Workers' Compensation Act pursuant to 85A O.S. § 2(18)(b)(1-11) – Attach a written, signed, and dated statement on letterhead stating the reason for the exempt status.[4]

[3] For frequently asked questions concerning Oklahoma Sales Tax Permit, see https://www.ok.gov/tax/Businesses/index.html

[4] **For frequently asked questions concerning workers' compensation insurance, see https://www.ok.gov/wcc/Insurance/index.html**

7. Disabled Veteran Business Enterprise Act

☐ YES – I am a service-disabled veteran business as defined in 74 O.S. §85.44E. Include with the bid response 1) certification of service-disabled veteran status as verified by the appropriate federal agency, and 2) verification of not less than 51% ownership by one or more service-disabled veterans, and 3) verification of the control of the management and daily business operations by one or more service-disabled veterans.

☐ NO – Do not meet the criteria as a service-disabled veteran business.

Authorized Signature	Date
Printed Name	Title

Certification for Competitive Bid and/or Contract
(Non-Collusion Certification)

NOTE: *A certification shall be included with any competitive bid and/or contract exceeding $5,000.00 submitted to the State for goods or services.*

Agency Name: *Oklahoma Department of Transportation* Agency Number: *34500*

Solicitation or Purchase Order #: 3450004902 / 20-3-0144

Supplier Legal Name: _____

SECTION I [74 O.S. § 85.22]:

A. For purposes of competitive bid,

1. I am the duly authorized agent of the above named bidder submitting the competitive bid herewith, for the purpose of certifying the facts pertaining to the existence of collusion among bidders and between bidders and state officials or employees, as well as facts pertaining to the giving or offering of things of value to government personnel in return for special consideration in the letting of any contract pursuant to said bid;
2. I am fully aware of the facts and circumstances surrounding the making of the bid to which this statement is attached and have been personally and directly involved in the proceedings leading to the submission of such bid; and
3. Neither the bidder nor anyone subject to the bidder's direction or control has been a party:
   a. to any collusion among bidders in restraint of freedom of competition by agreement to bid at a fixed price or to refrain from bidding,
   b. to any collusion with any state official or employee as to quantity, quality or price in the prospective contract, or as to any other terms of such prospective contract, nor
   c. in any discussions between bidders and any state official concerning exchange of money or other thing of value for special consideration in the letting of a contract, nor
   d. to any collusion with any state agency or political subdivision official or employee as to create a sole-source acquisition in contradiction to Section 85.45j.1. of this title.

B. I certify, if awarded the contract, whether competitively bid or not, neither the contractor nor anyone subject to the contractor's direction or control has paid, given or donated or agreed to pay, give or donate to any officer or employee of the State of Oklahoma any money or other thing of value, either directly or indirectly, in procuring this contract herein.

SECTION II [74 O.S. § 85.42]:

For the purpose of a contract for services, the supplier also certifies that no person who has been involved in any manner in the development of this contract while employed by the State of Oklahoma shall be employed by the supplier to fulfill any of the services provided for under said contract.

The undersigned, duly authorized agent for the above named supplier, by signing below acknowledges this certification statement is executed for the purposes of:

☐ the competitive bid attached herewith and contract, if awarded to said supplier;

OR

☐ the contract attached herewith, which was not competitively bid and awarded by the agency pursuant to applicable Oklahoma statutes.

Supplier Authorized Signature	Certified This Date
Printed Name	Title
Phone Number	Email
Fax Number	

A. GENERAL PROVISIONS

A.1. Definitions

As used herein, the following terms shall have the following meaning unless the context clearly indicates otherwise:

A.1.1. "Acquisition" means items, products, materials, supplies, services, and equipment an entity acquires by purchase, lease purchase, lease with option to purchase, or rental;

A.1.2. "Addendum" means a written restatement of or modification to a Contract Document executed by the Supplier and State.

A.1.3. "Bid" means an offer in the form of a bid, proposal, or quote a bidder submits in response to a solicitation;

A.1.4. "Bidder" means an individual or business entity that submits a bid in response to a solicitation;

A.1.5. "Solicitation" means a request or invitation by the State Purchasing Director or a state agency for a supplier to submit a priced offer to sell acquisitions to the state. A solicitation may be an invitation to bid, request for proposal, or a request for quotation; and

A.1.6. "Supplier" or "vendor" means an individual or business entity that sells or desires to sell acquisitions to state agencies.

A.2. Bid Submission

A.2.1. Submitted bids shall be in strict conformity with the instructions to bidders and shall be submitted with a completed Responding Bidder Information, OMES-FORM-CP-076, and any other forms required by the solicitation.

A.2.2. Bids shall be submitted to the procuring agency in a single envelope, package, or container and shall be sealed, unless otherwise detailed in the solicitation. The name and address of the bidder shall be inserted in the upper left corner of the single envelope, package, or container. SOLICITATION NUMBER AND SOLICITATION RESPONSE DUE DATE AND TIME MUST APPEAR ON THE FACE OF THE SINGLE ENVELOPE, PACKAGE, OR CONTAINER.

A.2.3. The required certification statement, "Certification for Competitive Bid and/or Contract (Non-Collusion Certification)", OMES-FORM-CP-004, must be made out in the name of the bidder and must be properly executed by an authorized person, with full knowledge and acceptance of all its provisions.

A.2.4. All bids shall be legible and completed in ink or with electronic printer or other similar office equipment. Any corrections to bids shall be identified and initialed in ink by the bidder. Penciled bids and penciled corrections shall NOT be accepted and will be rejected as non-responsive. All bids submitted shall be subject to the Oklahoma Central Purchasing Act, Central Purchasing Rules, and other statutory regulations as applicable, these General Provisions, any Special Provisions, solicitation specifications, required certification statement, and all other terms and conditions listed or attached herein—all of which are made part of this solicitation.

A.3. Solicitation Amendments

A.3.1. If an "Amendment of Solicitation", OMES-FORM-CP-011, is issued, the bidder shall acknowledge receipt of any/all amendment(s) to solicitations by signing and returning the solicitation amendment(s). Amendment acknowledgement(s) may be submitted with the bid or may be forwarded separately. If forwarded separately, amendment acknowledgement(s) must contain the solicitation number and response due date and time on the front of the envelope. The procuring agency must receive the amendment acknowledgement(s) by the response due date and time specified for receipt of bids for the bid to be deemed responsive. Failure to acknowledge solicitation amendments may be grounds for rejection.

A.3.2. No oral statement of any person shall modify or otherwise affect the terms, conditions, or specifications stated in the solicitation. All amendments to the solicitation shall be made in writing by the procuring agency.

A.3.3. It is the bidder's responsibility to check frequently for any possible amendments that may be issued. The procuring agency is not responsible for a bidder's failure to download any amendment documents required to complete a solicitation.

A.4. Bid Change

If the bidder needs to change a bid prior to the solicitation response due date, a new bid shall be submitted to the procuring agency with the following statement "This bid supersedes the bid previously submitted" in a single envelope, package, or container and shall be sealed, unless otherwise detailed in the solicitation. The name and address of the bidder shall be inserted in the upper left corner of the single envelope, package, or container. SOLICITATION NUMBER AND SOLICITATION RESPONSE DUE DATE AND TIME MUST APPEAR ON THE FACE OF THE SINGLE ENVELOPE, PACKAGE, OR CONTAINER.

A.5. Certification Regarding Debarment, Suspension, and Other Responsibility Matters

By submitting a response to this solicitation:

A.5.1. The prospective primary participant and any subcontractor certifies to the best of their knowledge and belief, that they and their principals or participants:

A.5.1.1. Are not presently debarred, suspended, proposed for debarment, declared ineligible, or voluntarily excluded by any Federal, State or local department or agency;

A.5.1.2. Have not within a three-year period preceding this proposal been convicted of or pled guilty or had a civil judgment rendered against them for commission of fraud or a criminal offense in connection with obtaining, attempting to obtain, or performing a public (Federal, State or local) contract; or for violation of Federal or State antitrust statutes or commission of embezzlement, theft, forgery, bribery, falsification or destruction of records, making false statements, or receiving stolen property;

A.5.1.3. Are not presently indicted for or otherwise criminally or civilly charged by a governmental entity (Federal, State, or local) with commission of any of the offenses enumerated in paragraph A.5.1.2. of this certification; and

A.5.1.4. Have not within a three-year period preceding this application/proposal had one or more public (Federal, State, or local) contracts terminated for cause or default.

A.5.2. Where the prospective primary participant is unable to certify to any of the statements in this certification, such prospective participant shall attach an explanation to its solicitation response.

A.6. Bid Opening

Sealed bids shall be opened by the **ODOT Procurement Division** located at **200 NE 21st, Room 3C6** Oklahoma City, OK 73105 at the time and date specified in the solicitation as the Response Due Date and Time.

A.7. Open Bid / Open Record

Pursuant to the Oklahoma Public Open Records Act, a public bid opening does not make the bid(s) immediately accessible to the public. The procurement or contracting agency shall keep the bid(s) confidential, and provide prompt and reasonable access to the records only after a contract is awarded or the solicitation is cancelled. This practice protects the integrity of the competitive bid process and prevents excessive disruption to the procurement process. The interest of achieving the best value for the State of Oklahoma outweighs the interest of vendors immediately knowing the contents of competitor's bids. [51 O.S. § 24A.5(5)]

Additionally, financial or proprietary information submitted by a bidder may be designated by the ODOT Procurement Division Manager as confidential and the procurement entity may reject all requests to disclose information designated as confidential pursuant to 62 O.S. (2012) § 34.11.1(H)(2) and 74 O.S. (2011) § 85.10. Bidders claiming any portion of their bid as proprietary or confidential must specifically identify what documents or portions of documents they consider confidential and identify applicable law supporting their claim of confidentiality. The State Purchasing Director shall make the final decision as to whether the documentation or information is confidential pursuant to 74 O.S. § 85.10. Otherwise, documents and information a bidder submits as part of or in connection with a bid are public records and subject to disclosure after contract award or the solicitation is cancelled.

A.8. Late Bids

Bids received by the ODOT Procurement Division after the response due date and time shall be deemed non-responsive and shall NOT be considered for any resultant award.

A.9. Legal Contract

A.9.1. Submitted bids are rendered as a legal offer and any bid, when accepted by the Procurement Division, shall constitute a contract.

A.9.2. The Contract resulting from this solicitation may consist of the following documents in the following order of precedence:

A.9.2.1. Any Addendum to the Contract;

A.9.2.2. Purchase order, as amended by Change Order (if applicable);

A.9.2.3. Solicitation, as amended (if applicable); and

A.9.2.4. Successful bid (including required certifications), to the extent the bid does not conflict with the requirements of the solicitation or applicable law.

A.9.3. Any contract(s) awarded pursuant to the solicitation shall be legibly written or typed.

A.10. Pricing

A.10.1. Bids shall remain firm for a minimum of sixty (60) days from the solicitation closing date.

A.10.2. Bidders guarantee unit prices to be correct.

A.10.3. In accordance with 74 O.S. §85.40, ALL travel expenses to be incurred by the supplier in performance of the Contract shall be included in the total bid price/contract amount.

A.11. Manufacturers' Name and Approved Equivalents

Unless otherwise specified in the solicitation, manufacturers' names, brand names, information and/or catalog numbers listed in a specification are for information and not intended to limit competition. Bidder may offer any brand for which they are an authorized representative, and which meets or exceeds the specification for any item(s). However, if bids are based on equivalent products, indicate on the bid form the manufacturer's name and number. Bidder shall submit sketches, descriptive literature, and/or complete specifications with their bid. Reference to literature submitted with a previous bid will not satisfy this provision. The bidder shall also explain in detail the reason(s) why the proposed equivalent will meet the specifications and not be considered an exception thereto. Bids that do not comply with these requirements are subject to rejection.

A.12. Clarification of Solicitation

A.12.1. Clarification pertaining to the contents of this solicitation shall be directed in writing to the Contracting Officer specified in the solicitation, and must be prior to the closing date of the solicitation.

A.12.2. If a bidder fails to notify the State of an error, ambiguity, conflict, discrepancy, omission or other error in the SOLICITATION, known to the bidder, or that reasonably should have been known by the bidder, the bidder shall submit a bid at its own risk; and if awarded the contract, the bidder shall not be entitled to additional compensation, relief, or time, by reason of the error or its later correction. If a bidder takes exception to any requirement or specification contained in the SOLICITATION, these exceptions must be clearly and prominently stated in their response.

A.12.3. Bidders who believe proposal requirements or specifications are unnecessarily restrictive or limit competition may submit a written request for administrative review to the contracting officer listed on the solicitation. This request must be made prior to the closing date of the solicitation.

A.13. Negotiations

A.13.1. In accordance with Title 74 §85.5, the Oklahoma Department of Transportation reserves the right to negotiate with one, selected, all or none of the vendors responding to this solicitation to obtain the best value for the State. Negotiations could entail discussions on products, services, pricing, contract terminology or any other issue that may mitigate the State's risks. The Department shall consider all issues negotiable and not artificially constrained by internal corporate policies. Negotiation may be with one or more vendors, for any and all items in the vendor's offer.

A.13.2. Firms that contend that they lack flexibility because of their corporate policy on a particular negotiation item shall face a significant disadvantage and may not be considered. If such negotiations are conducted, the following conditions shall apply:

A.13.3. Negotiations may be conducted in person, in writing, or by telephone.

A.13.4. Negotiations shall only be conducted with potentially acceptable offers. The State reserves the right to limit negotiations to those offers that received the highest rankings during the initial evaluation phase.

A.13.5. Terms, conditions, prices, methodology, or other features of the bidders offer may be subject to negotiations and subsequent revision. As part of the negotiations, the bidder may be required to submit supporting financial, pricing, and other data in order to allow a detailed evaluation of the feasibility, reasonableness, and acceptability of the offer.

A.13.6. The requirements of the Request for Proposal shall not be negotiable and shall remain unchanged unless the State determines that a change in such requirements is in the best interest of the State Of Oklahoma.

A.14. Rejection of Bid

The State reserves the right to reject any bids that do not comply with the requirements and specifications of the solicitation. A bid may be rejected when the bidder imposes terms or conditions that would modify requirements of the

solicitation or limit the bidder's liability to the State. Other possible reasons for rejection of bids are listed in OAC 260:115-7-32.

A.15. Award of Contract

A.15.1. The ODOT Procurement Division Manager may award the Contract to more than one bidder by awarding the Contract(s) by item or groups of items, or may award the Contract on an ALL OR NONE basis, whichever is deemed by the ODOT Procurement Division Manager to be in the best interest of the State of Oklahoma.

A.15.2. Contract awards will be made to the lowest and best bidder(s) unless the solicitation specifies that best value criteria is being used.

A.15.3. In order to receive an award or payments from the State of Oklahoma, suppliers must be registered. The vendor registration process can be completed electronically through the OMES website at the following link: https://www.ok.gov/dcs/vendors/index.php .

A.16. Contract Modification

A.16.1. The Contract is issued under the authority of the ODOT Procurement Division Manager who signs the Contract. The Contract may be modified only through a written Addendum, signed by the ODOT Procurement Division Manager and the supplier .

A.16.2. Any change to the Contract, including but not limited to the addition of work or materials, the revision of payment terms, or the substitution of work or materials, directed by a person who is not specifically authorized by the procuring agency in writing, or made unilaterally by the supplier, is a breach of the Contract. Unless otherwise specified by applicable law or rules, such changes, including unauthorized written Addendums, shall be void and without effect, and the supplier shall not be entitled to any claim under this Contract based on those changes. No oral statement of any person shall modify or otherwise affect the terms, conditions, or specifications stated in the resultant Contract.

A.17. Delivery, Inspection and Acceptance

A.17.1. Unless otherwise specified in the solicitation or awarding documents, all deliveries shall be F.O.B. Destination. The supplier(s) awarded the Contract shall prepay all packaging, handling, shipping and delivery charges and firm prices quoted in the bid shall include all such charges. All products and/or services to be delivered pursuant to the Contract shall be subject to final inspection and acceptance by the State at destination. "Destination" shall mean delivered to the receiving dock or other point specified in the purchase order. The State assumes no responsibility for goods until accepted by the State at the receiving point in good condition. Title and risk of loss or damage to all items shall be the responsibility of the supplier until accepted by the receiving agency. The supplier(s) awarded the Contract shall be responsible for filing, processing, and collecting any and all damage claims accruing prior to acceptance.

A.17.2. Supplier(s) awarded the Contract shall be required to deliver products and services as bid on or before the required date. Deviations, substitutions or changes in products and services shall not be made unless expressly authorized in writing by the procuring agency.

A.18. Invoicing and Payment

A.18.1. Upon submission of an accurate and proper invoice, the invoice shall be paid in arrears after products have been delivered or services provided and in accordance with applicable law. Invoices shall contain the purchase order number, a description of the products delivered or services provided, and the dates of such delivery or provision of services. An invoice is considered proper if sent to the proper recipient and goods or services have been received.

A.18.2. State Acquisitions are exempt from sales taxes and federal excise taxes.

A.18.3. Pursuant to 74 O.S. §85.44(B), invoices will be paid in arrears after products have been delivered or services provided.

A.18.4. Payment terms will be net 45. Interest on late payments made by the State of Oklahoma is governed by 62 O.S. § 34.72.

A.18.5. Additional terms which provide discounts for earlier payment may be evaluated when making an award. Any such additional terms shall be no less than ten (10) days increasing in five (5) day increments up to thirty (30) days. The date from which the discount time is calculated shall be the date of a proper invoice.

A.19. Tax Exemption

State agency acquisitions are exempt from sales taxes and federal excise taxes. Bidders shall not include these taxes in price quotes.

A.20. Audit and Records Clause

A.20.1. As used in this clause, “records" includes books, documents, accounting procedures and practices, and other data, regardless of type and regardless of whether such items are in written form, in the form of computer data, or in any other form. In accepting any Contract with the State, the successful bidder(s) agree any pertinent State or Federal agency will have the right to examine and audit all records relevant to execution and performance of the resultant Contract.

A.20.2. The successful supplier(s) awarded the Contract(s) is required to retain records relative to the Contract for the duration of the Contract and for a period of seven (7) years following completion and/or termination of the Contract. If an audit, litigation, or other action involving such records is started before the end of the seven (7) year period, the records are required to be maintained for two (2) years from the date that all issues arising out of the action are resolved, or until the end of the seven (7) year retention period, whichever is later.

A.21. Non-Appropriation Clause

The terms of any Contract resulting from the solicitation and any Purchase Order issued for multiple years under the Contract are contingent upon sufficient appropriations being made by the Legislature or other appropriate government entity. Notwithstanding any language to the contrary in the solicitation, purchase order, or any other Contract document, the procuring agency may terminate its obligations under the Contract if sufficient appropriations are not made by the Legislature or other appropriate governing entity to pay amounts due for multiple year agreements. The Requesting (procuring) Agency's decisions as to whether sufficient appropriations are available shall be accepted by the supplier and shall be final and binding.

A.22. Choice of Law

Any claims, disputes, or litigation relating to the solicitation, or the execution, interpretation, performance, or enforcement of the Contract shall be governed by the laws of the State of Oklahoma.

A.23. Choice of Venue

Venue for any action, claim, dispute or litigation relating in any way to the Contract shall be in Oklahoma County, Oklahoma.

A.24. Termination for Cause

A.24.1. The supplier may terminate the Contract for default or other just cause with a 30-day written request and upon written approval from the procuring agency. The State may terminate the Contract for default or any other just cause upon a 30-day written notification to the supplier.

A.24.2. The State may terminate the Contract immediately, without a 30-day written notice to the supplier, when violations are found to be an impediment to the function of an agency and detrimental to its cause, when conditions preclude the 30-day notice, or when the State Purchasing Director determines that an administrative error occurred prior to Contract performance.

A.24.3. If the Contract is terminated, the State shall be liable only for payment for products and/or services delivered and accepted.

A.25. Termination for Convenience

A.25.1. The State may terminate the Contract, in whole or in part, for convenience if the State Purchasing Director determines that termination is in the State's best interest. The State Purchasing Director shall terminate the contract by delivering to the supplier a Notice of Termination for Convenience specifying the terms and effective date of Contract termination. The Contract termination date shall be a minimum of 60 days from the date the Notice of Termination for Convenience is issued by the State Purchasing Director.

A.25.2. If the Contract is terminated, the State shall be liable only for products and/or services delivered and accepted, and for costs and expenses (exclusive of profit) reasonably incurred prior to the date upon which the Notice of Termination for Convenience was received by the supplier.

A.26. Insurance

The successful supplier(s) awarded the Contract shall obtain and retain insurance, including workers' compensation, automobile insurance, medical malpractice, and general liability, as applicable, or as required by State or Federal law,

prior to commencement of any work in connection with the Contract. The supplier awarded the Contract shall timely renew the policies to be carried pursuant to this section throughout the term of the Contract and shall provide the procuring agency with evidence of such insurance and renewals.

A.27. Employment Relationship

The Contract does not create an employment relationship. Individuals performing services required by this Contract are not employees of the State of Oklahoma or the procuring agency. The supplier's employees shall not be considered employees of the State of Oklahoma nor of the procuring agency for any purpose, and accordingly shall not be eligible for rights or benefits accruing to state employees.

A.28. Compliance with the Oklahoma Taxpayer and Citizen Protection Act of 2007

By submitting a bid for services, the bidder certifies that they, and any proposed subcontractors, are in compliance with 25 O.S. §1313 and participate in the Status Verification System. The Status Verification System is defined in 25 O.S. §1312 and includes but is not limited to the free Employment Verification Program (E-Verify) through the Department of Homeland Security and available at www.dhs.gov/E-Verify .

A.29. Compliance with Applicable Laws

The products and services supplied under the Contract shall comply with all applicable Federal, State, and local laws, and the supplier shall maintain all applicable licenses and permit requirements.

A.30. Special Provisions

Special Provisions set forth in SECTION B apply with the same force and effect as these General Provisions. However, conflicts or inconsistencies shall be resolved in favor of the Special Provisions.

SOLICITATION REQUEST

☐ Request for Quote ☒ Request for Proposal ☐ Request for Bid **Dispatch via Print**

Request Quote ID.	Date	Buyer	Page
3450004902	11/04/2019	Cheryl Emerson	1
Payment Terms	**DateTime Quote Open**	**Closing**	
0 Days	01/27/2020 11:01 AM	02/19/2020 04:00 PM	

Requisition Number Reference: From Req ID - 3450032076

Department of Transportation

Dept of Transportation
Procurement Branch
200 NE 21st Street
Oklahoma City OK 73105

Company Information

Supplier: NAME
Address:_____
Address:_____
City:_____ST:____ ZIP:_____

Ship To: DEPT OF TRANSPORTATION
SEE BELOW
OK

Bill To: Dept of Transportation
Div 3 HQ
PO Box 549
Ada OK 74821

Supplier Responses

Line	Cat CD / Item # - Descr		Qty.	UOM	Unit Cost	Ext. Cost
1	95121504 /	Bolt Together Loafing Shed	2	EA	_____	_____

Vendor to manufacture Two (2) PEMB bolt together Equipment Sheds.
ODOT will assemble the structures.
Fork lift available at both locations.

NOTE: Vendors shall include a Bill of Materials and Specifications for each equipment shed kit that they provide pricing for.

See attached Scope of Work

Delivery to the following locations:
1. Pontotoc County Maintenance Yard - 12844 State Highway 3W, Ada, OK 74820; and
2. Okfuskee County Maintenance Yard, 104 W. Coplin Street, Okemah, OK 74859.
(See Attached Google Earth images).

Freight Terms: FOB DEST **Ship Via:** COMMON

Lead Time: _____

Supplier Remarks:

COMMENTS:
The Solicitation is in accordance with Oklahoma Statute, Title 74, Section 85.12.B.3.

Fund: 310
ODOT Expense Account: 712300
Object Code: 462100
Project #: B-J3-4630(004)
JP #: 34630(04)
.

Bill To: 03000B
Department of Transportation
Division 3 Headquarters
PO Box 549
Ada, OK 74820

Ref Agy Req: 20-3-0144
Requisition: 3450032076
.
Approved by Secretary of Transportation Tim J. Gatz 11/12/19

This is NOT AN ORDER
All returned quotes and related documents must be identified with our request for quote Number.

Authorized Signature

Sign Here

Scope of Project:

Manufacture 2 PEMB bolt together Equipment sheds. Price is to include Shop drawings, any design and all necessary hardware, brackets, braces and materials.

Delivery to the following locations:

Pontotoc County Maintenance Yard - 12844 St Hwy 3W, Ada, OK 74820

Okfuskee County Maintenance Yard - 104 W. Coplin Street, Okemah, OK 74859.

(See attached google earth image)

Dimensions of Loafing Shed:

Front- 96' long with 4- 24’ openings.

Back - 96' long.

Sides - 32' deep

Roof- 14'-8" tall at front and 12' tall at back.

Colors of Metal:

Exterior sides and back walls - Colony Green.

Top, trim and interior walls - White.

Guttering along back wall with 5 down spouts - White

Scope of Work:

ODOT will assembly structures.

Fork lift available at both locations.

GENERAL NOTES

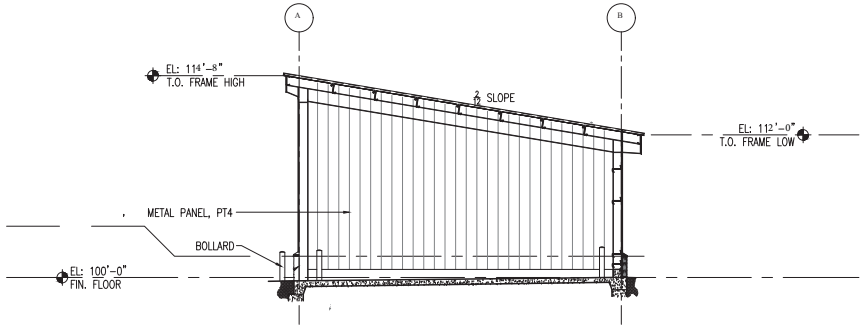

2 **BUILDING SECTION**

1/8"=1'-0"

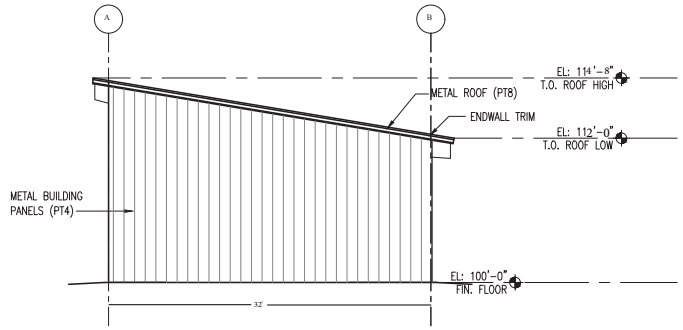

1 **EXTERIOR ELEVATION**

1/8"=1'-0"

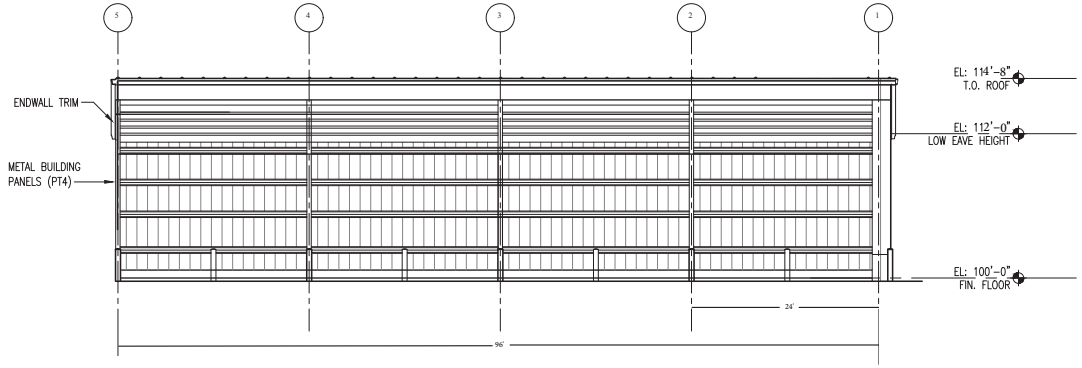

3 **EXTERIOR ELEVATION**

1/8"=1'-0"

PLOT DATE: 9/13/2018

REVISION HISTORY

NO.	DESCRIPTION	DATE

SUBMITTAL:	CONSTRUCTION DOCUMENTS
DATE:	11/18/19
PROJECT NO.	13010
DESIGNED BY:	MBR
DRAWN BY:	MBR
APPROVED BY:	CHOWARD
SCALE:	AS SHOWN

MAINTENANCE FACILITY

DIVISION 03 - PONTOTOC COUNTY

OKLAHOMA DEPARTMENT OF TRANSPORTATION

ADA, OKLAHOMA

SHEET NAME

EQUIPMENT SHED ELEV./SECTIONS

SHEET

001

Division 3 Equip Shed

Okfuskee County Oklahoma
104 W. Coplin, Okemah, Okla 74859

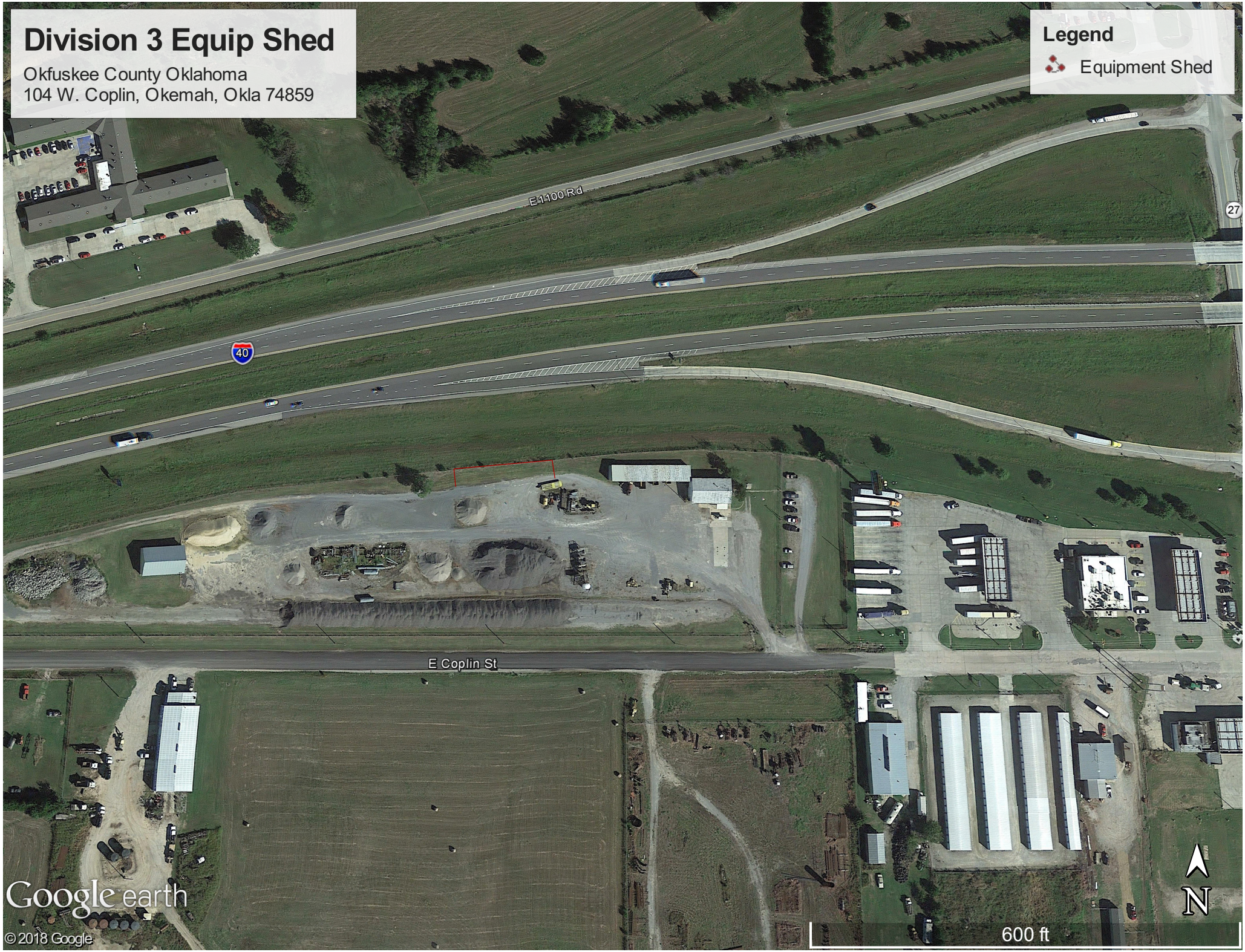

Division 3 Equip Shed

Pontotoc County Oklahoma
12844 St Hwy 3W, Ada, Okla 74820