ADDENDUM A
SOLICITATION #3450004900 / 20-FM-0042
01/31/2020

ODOT DIVISION V
BECKHAM COUNTY MAINTENANCE YARD
(SAYRE, OK)

This addendum contains corrections to the project specifications and plans.

Addendum A

PROJECT SPECIFICATIONS

((See attached Architectural Addendum A for revisions to architectural specifications))

SECTION 26 6125 Replace with attached; MC cable allowed in specific applications.

SECTION 26 6140 Replace with attached; all wiring devices shall be grey with stainless steel coverplates.

PROJECT PLANS:

TITLE Replace sheet with attached; added 2 sheets & updated sheet index

SHEETS C2.1, C2.3, C2.4, & C3.1 Replace sheets with attached; revised parking lot layout to remove west curb, widen stalls, & allow for fire-truck pull-through; narrowed entry gate; changed trickle channel to flexamat

SHEETS C3.2 & C3.3 Replace sheets with attached; revised/added grading labels at fuel tank & salt/mix shed; changed several rip-rap areas to Flexamat

SHEETS C4.0, C4.1, C4.2, & C4.3 Replace sheets with attached; revised waterline sizes & added fill hydrant at hopper rack; revised electric pathways

SHEET C4.4 Replace sheet with attached; additional bollards to meet OCC regulations

SHEETS C7.0, C7.1, C7.2, C7.3 Replace sheets with attached; added details for flexamat, fillet reinforcing, gore stripe, sidewalk expansion joint, & fill hydrant; revised details for mix pad inlet & tank pad

SHEET C7.6 New sheet added to set – **"Flexamat Detail"**

((See attached Architectural Addendum A for revisions to architectural plans))

SHEET MM1.1	Replace sheet with attached; revised duct sizes & air flow quantities
SHEET MM2.1	Replace sheet with attached; airflow quantity and static pressure reduced on the air handler
SHEET ME0.2	Replace sheet with attached; added panel PB for brine tank pad; clarified electric utility responsibility; changed breakers for fuel pump
SHEET ME0.3	Replace sheet with attached; clarified mounting of fixtures BA & BB; no pre-approval required (during bidding) on equal light fixture packages
SHEET ME1.1	Replace sheet with attached; added panel PB for brine tank pad; clarified shunt/control for fuel pump power; changed fuel pump power to 208V
SHEET ME2.1	Replace sheet with attached; clarified environment rating & conduit type in equipment shed; removed ceiling-mounted occupancy sensors
SHEET ME3.1	Replace sheet with attached; clarified shunt/control for fuel pump power; reduced communications conduits to 2in
SHEET MP1.1	Replace sheet with attached; shifted floor sink near furnace & domestic water entry to avoid building foundations
SHEET VS1.1	Replace sheet with attached; refer to sheet CS1.1 for catwalk details
SHEET VP1.1	Replace sheet with attached; added backflow preventer detail & non-potable water piping, extended for Civil continuation on site
SHEET CS1.1	Replace sheet with attached; whole sheet revisions – catwalk is no longer pre-manufactured.
SHEETS HS1.1 & HS1.2	Replace sheets with attached; modified soil subgrade requirements at slab-on-grade; refer to sheet CS2.1 for catwalk details
SHEET CS2.1	New sheet added to set – **"Catwalk Details"**

END OF ADDENDUM A

ADDENDUM A

Project: Oklahoma Department of Transportation – Beckham County Maintenance Facility
Location: Sayre, Oklahoma
Issued Date: 30 January 2020

This Addendum is hereby made a part on the Contract Documents Dated September 21st, 2020 on the subject work as though originally included therein. The following amendments, additions and/or corrections shall govern this work.

The Addendum is in three parts as follows:
Part 1 – Pertaining to Project Manual
Part 2 – Pertaining to Drawings
Part 3 – Pertaining to Questions Received and Answers Given,
(Verbal responses are not part of this addendum or the Contract Documents. If responses given in this addendum do not match your understanding of responses given verbally, notify Studio Architecture promptly.)

PART 1 - Project Manual:

1.1 Delete the following Sections:
- A. None.

1.2 Add the following Sections:
- A. None.

1.3 Modify the following Sections:
- A. 00 0110 – Table of Contents
  - 1. Added sections 06 1640, 07 2500, 09 6723, 12 2413.
- B. 04 2000 – Split Face Masonry
  - 1. Modify Section 2.01.A.1 for 4" deep CMU instead of 8" deep.

PART 2 - DRAWINGS:

2.1 Add the following Sheets:
- A. None added.

2.2 Modify the following Sheets:
- A. G1.0 – Added clarification to the code plan and legend, enlarging some symbols, and adding indications of locations of egress door panic hardware.
- B. MA2.0 – Added dimensions and notes to enlarged floor plan.
- C. MA3.0 – Added roof plan legend.

D. MA4.0 – Added elevation legend, added information on the roof snow guard spec. section, added information on roof type, added paint color for downspouts, clarified mechanical and electrical references.
E. MA5.0 – Clarified mechanical and electrical references.
F. MA7.0 – Updated details 4, 10, and 15 to show a hemmed edge for the counterflashing rather than a drip edge.
G. MA10.0 – Changed unisex restroom signs to gendered restroom signs, updated sizes of other room signs.
H. MA11.0 – Changed window detail references.
I. MA11.1 – Updated details 7 and 15 to include a note indicating the inside closure set in sealant.
J. MA11.2 – Updated details 5 and 6 to include a note indicating end dams and that the weather barrier needs to be wrapped into the opening.
K. MA12.0 – Removed legend note indicating which fixtures have emergency battery backups. Added notes referencing electrical and mechanical in the legend.
L. VA2.0 – Added PT9 to the Material Schedule and note 9 to the Material Schedule Notes.
M. VA6.1 – Added notes to details 8 and 9 indicating the inside closure set in sealant and that the bottom of the metal panel should remain 2" above grade.

2.3 Delete the following Sheets:
A. None.

PART 3 - Questions & Answers

A. None.

END OF ADDENDUM A

SECTION 00 01 10

TABLE OF CONTENTS

SPECIFICATIONS

1.01 DIVISION 01 -- GENERAL REQUIREMENTS

A. 01 10 00 - Summary
B. 01 22 00 - Unit Prices
C. 01 29 00 - Payment Procedures
D. 01 31 00 - Project Management and Coordination
E. 01 32 00 - Construction Progress Documentation
F. 01 33 00 - Submittal Procedures
G. 01 40 00 - Quality Requirements
H. 01 60 00 - Product Requirements
I. 01 73 00 - Execution
J. 01 77 00 - Closeout Procedures
K. 01 78 23 - Operation and Maintenance Data
L. 01 79 00 - Demonstration and Training

1.02 DIVISION 03 -- CONCRETE

A. 03 30 20 - Concrete Sealer/Hardener

1.03 DIVISION 04 -- MASONRY

A. 04 20 00 - Split Face Unit Masonry

1.04 DIVISION 05 -- METALS

A. 05 40 00 - Cold-Formed Metal Framing

1.05 DIVISION 06 -- WOOD, PLASTICS, AND COMPOSITES

A. 06 10 00 - Rough Carpentry
B. 06 16 40 - Gypsum Sheathing
C. 06 41 00 - Architectural Wood Casework

1.06 DIVISION 07 -- THERMAL AND MOISTURE PROTECTION

A. 07 21 30 - Pre-Engineered Building Insulation
B. 07 25 00 - Weather Barriers
C. 07 62 00 - Sheet Metal Flashing and Trim
D. 07 92 00 - Joint Sealants

1.07 DIVISION 08 -- OPENINGS

A. 08 11 13 - Hollow Metal Doors and Frames
B. 08 17 43 - FRP Flush Doors
C. 08 31 00 - Access Doors and Panels
D. 08 36 13 - Sectional Doors
E. 08 43 13 - Aluminum-Framed Storefronts
F. 08 70 00 - Hardware
G. 08 80 00 - Glazing

1.08 DIVISION 09 -- FINISHES

A. 09 21 16 - Gypsum Board Assemblies

STATE OF OKLAHOMA
Joshua S. Hill
ad663
Oklahoma City, Oklahoma
LICENSED ARCHITECT
01/29/2020

B. 09 51 00 - Acoustical Ceilings
C. 09 65 00 - Resilient Flooring
D. 09 67 23 - Resinous Flooring
E. 09 77 33 - Glass Fiber Reinforced Plastic Panels
F. 09 90 00 - Painting and Coating

1.09 DIVISION 10 -- SPECIALTIES

A. 10 14 00 - Signage
B. 10 28 00 - Toilet, Bath, and Laundry Accessories
C. 10 44 00 - Fire Protection Specialties
1. Red Line Hand Portable Extinguisher Cut Sheet
2. Sentry Dry Chemical Hand Portable Extinguisher Cut Sheet

1.10 DIVISION 12 -- FURNISHINGS

A. 12 24 13 - Roller Window Shades

1.11 DIVISION 13 -- SPECIAL CONSTRUCTION

A. 13 31 00 - Fabric Structures
B. 13 34 19 - Metal Building Systems

1.12 DIVISION 31 -- EARTHWORK

A. 31 31 16 - Termite Control

END OF SECTION

SECTION 04 20 00
SPLIT-FACE UNIT MASONRY

PART 1 GENERAL

1.01 SECTION INCLUDES

A. Split-Face Concrete Block.

B. Mortar and Grout.

C. Reinforcement and Anchorage.

D. Flashings.

E. Accessories.

1.02 RELATED REQUIREMENTS

A. Section 07 62 00 - Sheet Metal Flashing and Trim: Through-wall masonry flashings.

B. Section 07 92 00 - Joint Sealants: Sealing control and expansion joints.

1.03 REFERENCE STANDARDS

A. ACI 530/530.1/ERTA - Building Code Requirements and Specification for Masonry Structures and Related Commentaries; 2011.

B. ACI 530.1/ASCE 6/TMS 602 - Specification For Masonry Structures; American Concrete Institute International; 2008.

C. ASTM A82/A82M - Standard Specification for Steel Wire, Plain, for Concrete Reinforcement; 2007.

D. ASTM A153/A153M - Standard Specification for Zinc Coating (Hot-Dip) on Iron and Steel Hardware; 2009.

E. ASTM A1064/A1064M - Standard Specification for Carbon-Steel Wire and Welded Wire Reinforcement, Plain and Deformed, for Concrete; 2015.

F. ASTM C91/C91M - Standard Specification for Masonry Cement; 2012.

G. ASTM C129 - Standard Specification for Nonloadbearing Concrete Masonry Units; 2011.

H. ASTM C144 - Standard Specification for Aggregate for Masonry Mortar; 2011.

I. ASTM C150/C150M - Standard Specification for Portland Cement; 2015.

J. ASTM C207 - Standard Specification for Hydrated Lime for Masonry Purposes; 2006 (Reapproved 2011).

K. ASTM C270 - Standard Specification for Mortar for Unit Masonry; 2014a.

L. ASTM C404 - Standard Specification for Aggregates for Masonry Grout; 2011.

M. ASTM C476 - Standard Specification for Grout for Masonry; 2010.

N. ASTM C979/C979M - Standard Specification for Pigments for Integrally Colored Concrete; 2010.

O. BIA Technical Notes No. 7 - Water Penetration Resistance - Design and Detailing; 2005.

P. BIA Technical Notes No. 28B - Brick Veneer/Steel Stud Walls; 2005.

Q. BIA Technical Notes No. 46 - Maintenance of Brick Masonry; 2005.

1.04 SUBMITTALS

A. See Section 01 30 00 - Administrative Requirements, for submittal procedures.

B. Product Data: Provide data for each type of product indicated.

C. Samples: Submit four samples of decorative block units to illustrate color, texture, and extremes of color range.

1.05 QUALITY ASSURANCE

A. Comply with provisions of ACI 530/530.1/ERTA, except where exceeded by requirements of the contract documents.
   1. Maintain one copy of each document on project site.

1.06 MOCK-UP

A. Build mockup of typical exterior wall as shown on the Drawings in size as directed by the Architect.

B. Approval of mockups is for color, texture, and blending of masonry units; relationship of mortar and sealant colors to masonry unit colors; tooling of joints; and aesthetic qualities of workmanship.

C. 8 feet long by 4 feet high; include mortar and accessories and structural backup in mock-up.

D. Locate where directed.

E. Mock-up may remain as part of the Work.

1.07 DELIVERY, STORAGE, AND HANDLING

A. Deliver, handle, and store masonry units by means that will prevent mechanical damage and contamination by other materials.

1.08 PROJECT CONDITIONS

A. Cold-Weather Requirements: Do not use frozen materials mixed or coated with ice or frost. Do not build on frozen substrates. Remove and replace unit masonry damaged by frost or by freezing conditions. Comply with cold-weather construction requirements contained in ACI 530.1/ASCE 6/TMS 602.

B. Hot-Weather Requirements: Comply with hot-weather construction requirements contained in ACI 503.1/ASCE 6/TMS 602.

PART 2 PRODUCTS

2.01 CONCRETE MASONRY UNITS

A. Split Face Concrete Block: Comply with referenced standards and as follows:
   1. Size: Standard units with nominal face dimensions of 16 by 8 inches and nominal depth of 4 inches.
   2. Non-Loadbearing Units: ASTM C129.
      a. Lightweight.
      b. Provide manufacturer's standard range of colors to select from.
   3. Unit Compressive Strength: Provide units with a minimum average net-area compressive strength of 1900 psi.

2.02 MORTAR AND GROUT MATERIALS

A. Masonry Cement: ASTM C91/C91M, Type N.

B. Portland Cement: ASTM C150/C150M, Type I; color as required to produce approved color sample.

C. Hydrated Lime: ASTM C207, Type S.

D. Mortar Aggregate: ASTM C144.

E. Grout Aggregate: ASTM C404.

F. Water: Clean and potable.

G. Moisture-Resistant Admixture: Water repellent compound designed to reduce capillarity.

2.03 REINFORCEMENT AND ANCHORAGE

A. Basis for design: Heckmann Anchors: Pos-I-Tie

B. Manufacturers of Joint Reinforcement and Anchors:

1. Dur-O-Wal: www.dur-o-wal.com.
2. Hohmann & Barnard, Inc: www.h-b.com.
3. WIRE-BOND: www.wirebond.com/#sle.
4. Substitutions: See Section 01 60 00 - Product Requirements.

C. Single Wythe Joint Reinforcement: Truss or ladder type; ASTM A1064/A1064M steel wire, mill galvanized to ASTM A641/A641M, Class 3; 0.1483 inch side rods with 0.1483 inch cross rods; width as required to provide not more than 1 inch and not less than 1/2 inch of mortar coverage on each exposure.

D. Space Single Wythe Joint Reinforcement at the top of the first split face block course and below the top split face block course.

E. Masonry Veneer Anchors: 2-piece anchors that permit differential movement between masonry veneer and structural backup, hot dip galvanized to ASTM A 153/A 153M, Class B.
1. Anchor plates: Not less than 0.075 inch thick, designed for fastening to structural backup through sheathing by two fasteners; provide design with legs that penetrate sheathing and insulation to provide positive anchorage.
2. Wire ties: Manufacturer's standard shape, 0.1875 inch thick.
3. Vertical adjustment: Not less than 3-1/2 inches.

F. Metal-to-Metal Fasteners: Self-drilling, self-tapping screws; corrosion resistant finish or hot dip galvanized to ASTM A153/A153M.

2.04 FLASHINGS

A. Flexible Flashing with Elvaloy KEE: Solid-phase plasticizer and flexibilizer added to membrane flashing.
1. Manufacturers:
a. Hohmann & Barnard, Inc; Flex-Flash Flashing: www.h-b.com/sle.
1) Provide: Pre-formed seamless corners and end dams.

2.05 ACCESSORIES

A. Preformed Control Joints: Rubber material. Provide with corner and tee accessories, fused joints.
1. Manufacturers:
a. Dur-O-Wal: www.dur-o-wal.com.
b. Hohmann & Barnard, Inc (including Dur-O-Wal brand); .: www.h-b.com.
c. Substitutions: See Section 01 60 00 - Product Requirements.

B. Cavity Mortar Control: Semi-rigid polyethylene or polyester mesh panels, sized to thickness of wall cavity, and designed to prevent mortar droppings from clogging weeps and cavity vents and allow proper cavity drainage.

C. Weeps:
1. Type: Molded PVC grilles, insect resistant.
2. Manufacturers:
a. Dur-O-Wal; Product DA 1006: www.dur-o-wal.com.
b. Hohmann & Barnard, Inc; QV- Quadro-Vent: www.h-b.com.
c. Substitutions: See Section 01 60 00 - Product Requirements.

D. Cleaning Solution: Non-acidic, not harmful to masonry work or adjacent materials.

2.06 MORTAR AND GROUT MIXES

A. Mortar for Unit Masonry: ASTM C270, using the Proportion Specification.
1. Masonry below grade and in contact with earth: Type S.
2. Exterior, loadbearing masonry: Type N.
3. Exterior, non-loadbearing masonry: Type N.

B. Grout: ASTM C476; consistency required to fill completely volumes indicated for grouting; fine grout for spaces with smallest horizontal dimension of 2 inches or less; coarse grout for spaces with smallest horizontal dimension greater than 2 inches.

PART 3 EXECUTION

3.01 EXAMINATION

A. Verify that field conditions are acceptable and are ready to receive masonry.

B. Verify that related items provided under other sections are properly sized and located.

C. Verify that built-in items are in proper location, and ready for roughing into masonry work.

3.02 PREPARATION

A. Direct and coordinate placement of metal anchors supplied for installation under other sections.

B. Provide temporary bracing during installation of masonry work. Maintain in place until building structure provides permanent bracing.

3.03 COLD AND HOT WEATHER REQUIREMENTS

A. Comply with requirements of ACI 530/530.1/ERTA or applicable building code, whichever is more stringent.

3.04 COURSING

A. Establish lines, levels, and coursing indicated. Protect from displacement.

B. Maintain masonry courses to uniform dimension. Form vertical and horizontal joints of uniform thickness.

C. Split-Face Concrete Masonry Units:
   1. Bond: Running.
   2. Mortar Joints: Concave.

3.05 WEEPS/CAVITY VENTS

A. Install weeps in veneer and cavity walls at 24 inches on center horizontally above through-wall flashing, above shelf angles and lintels, and at bottom of walls.

3.06 CAVITY MORTAR CONTROL

A. Do not permit mortar to drop or accumulate into cavity air space or to plug weep/cavity vents.

B. Install cavity mortar diverter at base of cavity and at other flashing locations as recommended by manufacturer to prevent mortar droppings from blocking weep/cavity vents.

3.07 REINFORCEMENT AND ANCHORAGE - GENERAL

A. Unless otherwise indicated on drawings or specified under specific wall type, install horizontal joint reinforcement 16 inches on center.

B. Place masonry joint reinforcement in first and second horizontal joints above and below openings. Extend minimum 16 inches each side of opening.

C. Reinforce stack bonded unit joint corners and intersections with strap anchors 16 inches on center.

D. Fasten anchors to structural framing and embed in masonry joints as masonry is laid. Unless otherwise indicated on drawings or closer spacing is indicated under specific wall type, space anchors at maximum of 24 inches horizontally and 16 inches vertically.

3.08 MASONRY FLASHINGS

A. Whether or not specifically indicated, install masonry flashing to divert water to exterior at all locations where downward flow of water will be interrupted.
   1. Extend flashings full width at such interruptions and at least 6 inches into adjacent masonry or turn up at least 8 inches to form watertight pan at non-masonry construction.
   2. Remove or cover protrusions or sharp edges that could puncture flashings.
   3. Seal lapped ends and penetrations of flashing before covering with mortar.

B. Extend plastic and laminated flashings to within 1/4 inch of exterior face of masonry.

C. Lap end joints of flashings at least 6 inches and seal watertight with flashing sealant/adhesive.

3.09 CONTROL AND EXPANSION JOINTS

A. Do not continue horizontal joint reinforcement through control or expansion joints.

B. Install preformed control joint device in continuous lengths. Seal butt and corner joints in accordance with manufacturer's instructions.

3.10 TOLERANCES

A. Maximum Variation From Unit to Adjacent Unit: 1/16 inch.

B. Maximum Variation from Plane of Wall: 1/4 inch in 10 ft and 1/2 inch in 20 ft or more.

C. Maximum Variation from Plumb: 1/4 inch per story non-cumulative; 1/2 inch in two stories or more.

D. Maximum Variation from Level Coursing: 1/8 inch in 3 ft and 1/4 inch in 10 ft; 1/2 inch in 30 ft.

E. Maximum Variation of Mortar Joint Thickness: Head joint, minus 1/4 inch, plus 3/8 inch.

3.11 CLEANING

A. Remove excess mortar and mortar droppings.

B. Replace defective mortar. Match adjacent work.

C. Clean soiled surfaces with cleaning solution.

3.12 PROTECTION

A. Without damaging completed work, provide protective boards at exposed external corners that are subject to damage by construction activities.

END OF SECTION

SECTION 26 6125
BUILDING WIRE AND CABLE

PART 1 GENERAL

1.1 SECTION INCLUDES

A. Building wire and cable.

B. Wiring connectors and connections.

1.2 RELATED SECTIONS

A. Section 16195 - Electrical Identification.

1.3 REFERENCES

A. Division 1 - Requirements for references and standards.

B. NECA Standard of Installation (National Electrical Contractors Association).

C. NETA ATS - Acceptance Testing Specifications for Electrical Power Distribution Equipment and Systems (International Electrical Testing Association).

D. NFPA 70 - National Electrical Code.

1.4 SUBMITTALS FOR REVIEW

A. Division 1 - Submittals: Procedures for submittals.

B. Product Data: Provide for each wire type.

1.5 SUBMITTALS FOR INFORMATION

A. Division 1 - Submittals: Procedures for submittals.

B. Test Reports: Indicate procedures and values obtained.

C. Manufacturer's Installation Instructions: Indicate application conditions and limitations of use stipulated by product testing agency specified under Regulatory Requirements.

1.6 SUBMITTALS AT PROJECT CLOSEOUT

A. Division 1 - Procedures for submittals.

B. Project Record Documents: Record actual locations of components and circuits.

1.7 QUALIFICATIONS

A. Manufacturer: Company specializing in manufacturing products specified in this Section with minimum three years documented experience.

1.8 REGULATORY REQUIREMENTS

A. Conform to NFPA 70.

B. Furnish products listed and classified by Underwriters Laboratories Inc., as suitable for the purpose specified and indicated.

1.9 FIELD SAMPLES

A. Provide under provisions of Division 1.

1.10 PROJECT CONDITIONS

A. Division 1 - Coordination and Meetings.

B. Verify that field measurements are as indicated.

C. Conductor sizes are based on copper unless indicated as aluminum or "AL".

D. Wire and cable routing indicated is approximate unless dimensioned.

1.11 COORDINATION

A. Coordinate Work under provisions of Division 1.

B. Where wire and cable destination is indicated and routing is not shown, determine exact routing and lengths required.

PART 2 PRODUCTS

2.1 BUILDING WIRE

A. Manufacturers:
1. Southwire
2. Encore Wire
3. Superior Essex
4. Substitutions: Refer to Division 1 - Material and Equipment.

B. Description: Single conductor insulated wire.

C. Conductor: Copper.

D. Insulation Voltage Rating: 600 volts.

E. Insulation: NFPA 70, Type THW and THHN/THWN.

2.2 WIRING CONNECTORS

A. Branch Circuits – 8awg and larger – Mechanical, pre-insulated, approved for Copper and Aluminum conductors:
1. Burndy UNITAP.
2. Substitutions: Refer to Division 1 - Material and Equipment.

B. Branch Circuits – 10awg and smaller – Solderless Pressure Connectors:
   1. T&B.
   2. Substitutions: Refer to Division 1 - Material and Equipment.

C. Spring Wire Connectors:
   1. 3M.
   2. Substitutions: Refer to Division 1 - Material and Equipment.

D. Compression Connectors:
   1. T&B.
   2. Substitutions: Refer to Division 1 - Material and Equipment.

2.3 METAL CLAD (MC) CABLE

A. Manufacturers:
   1. AFC Cable Systems
   2. Southwire
   3. Encore Wire
   4. General Cable
   5. Substitutions: Refer to Division 1 - Material and Equipment.

B. Description: Galvanized Steel Armor. Multiconductor cable assembly.

C. Conductor: Copper unless noted otherwise.

PART 3 EXECUTION

3.1 EXAMINATION

A. Division 1 - Coordination and Meetings: Verification of existing conditions before starting work.

B Verify that interior of building has been protected from weather.

C. Verify that mechanical work likely to damage wire and cable has been completed.

D. Verify that raceway installation is complete and supported.

3.2 PREPARATION

A. Completely and thoroughly swab raceway before installing wire.

3.3 WIRING METHODS

A. Concealed Dry Interior Locations: Use only building wire Type THW and THHN/THWN insulation in raceway or MC cable as noted below.

B. Exposed Dry Interior Locations: Use only building wire Type THW and THHN/THWN insulation in raceway or MC cable as noted below.

C. Above Accessible Ceilings: Use only building wire Type THW and THHN/THWN insulation in raceway or MC cable as noted below.

D. Wet or Damp Interior Locations: Use only building wire Type THW and THHN/THWN insulation in raceway.

E. Exterior Locations: Use only building wire Type THW and THHN/THWN insulation in raceway.

F. Underground Installations: Use only building wire Type THW and THHN/THWN insulation in raceway.

G. MC cable shall be allowed in limited instances.
   1. Lighting whips (6ft or less)
   2. Between receptacles on the same circuit. No MC cable shall be visible to occupants.
   3. All circuits from panel to first device served shall be in conduit.

3.4 INSTALLATION

A. Do not share neutrals on branch circuit wiring. Each lighting and power circuit shall have a dedicated neutral.

B. Division 1 - Quality Control: Manufacturer's instructions.

C. Route wire and cable as required to meet Project Conditions.

D. Install cable in accordance with the NECA "Standard of Installation."

E. Use solid conductor for feeders and branch circuits 10 AWG and smaller.

F. Use stranded conductors for control circuits.

G. Use conductor not smaller than 12 AWG for power and lighting circuits.

H. Use conductor not smaller than 14 AWG for control circuits.

I. U.O.N. Use 10 AWG conductors for 20 ampere, 120 volt branch circuits longer than 75 feet.

J. U.O.N. Use 10 AWG conductors for 20 ampere, 277 volt branch circuits longer than 200 feet.

K. Pull all conductors into raceway at same time.

L. Use suitable wire pulling lubricant for building wire 4 AWG and larger.

M. Protect exposed cable from damage.

N. Neatly train and lace wiring inside boxes, equipment, and panelboards.

O. Clean conductor surfaces before installing lugs and connectors.

P. Make splices, taps, and terminations to carry full ampacity of conductors with no perceptible temperature rise.

Q. Use split bolt connectors for copper conductor splices and taps, 6 AWG and larger. Tape uninsulated conductors and connector with electrical tape to 150 percent of insulation rating of conductor.

R. Use solderless pressure connectors with insulating covers for copper conductor splices and taps, 8 AWG and smaller.

S. Use insulated spring wire connectors with plastic caps for copper conductor splices and taps, 10 AWG and smaller.

T. Identify and color code wire and cable under provisions of Section 16195. Identify each conductor with its circuit number or other designation indicated.

3.5 FIELD QUALITY CONTROL

A. Division 1 - Field inspection, testing and adjusting.

B. Inspect and test in accordance with NETA ATS, except Section 4.

C. Perform inspections and tests listed in NETA ATS, Section 7.3.1.

END OF SECTION

PAGE INTENTIONALLY LEFT BLANK

SECTION 26 6140
WIRING DEVICES

PART 1 GENERAL

1.1 SECTION INCLUDES

A. Wall switches.

B. Wall dimmers.

C. Receptacles.

D. Device coverplates.

1.2 RELATED SECTIONS

A. Section 26 6130 - Boxes.

1.3 REFERENCES

A. NECA - Standard of Installation.

B. NEMA WD 1 - General Requirements for Wiring Devices.

C. NEMA WD 6 - Wiring Device -- Dimensional Requirements.

D. NFPA 70 - National Electrical Code.

1.4 SUBMITTALS FOR REVIEW

A. Division 1 - Submittals: Procedures for submittals.

B. Product Data: Provide manufacturer's catalog information showing dimensions, colors, and configurations.

1.5 SUBMITTALS FOR INFORMATION

A. Division 1 - Submittals: Submittals for information.

B. Submit manufacturer's installation instructions.

1.6 QUALIFICATIONS

A. Manufacturer: Company specializing in manufacturing the Products specified in this section with minimum ten (10) years documented experience.

1.7 REGULATORY REQUIREMENTS

A. Conform to requirements of NFPA 70.

B. Provide Products listed and classified by Underwriters Laboratories, Inc., as suitable for the

purpose specified and indicated.

1.8 EXTRA MATERIALS

A. Division 1 - Contract Closeout and - Operation and Maintenance Data.

B. Furnish three (3) of each wiring device type, size, and finish coverplate.

PART 2 PRODUCTS

2.1 WALL SWITCHES

A. Manufacturers:
1. Hubbell HBL1221 Series.
2. Substitutions: Refer to Division 1.

B. The following switches shall be in color(s) specified hereinafter:

1.	Single pole:	HBL1221__
2.	Double pole:	HBL1222__
3.	Three way:	HBL1223__
4.	Four way:	HBL1224__
5.	Locking type:	HBL____L
6.	Key for locking type:	HBL1209
7.	Lighted toggle (on w/load OFF)	HBL____ILC
8.	Pilot light (on w/load ON)	HBL____PLC

C. Description: NEMA WD 1, Heavy-Duty, Industrial-Institutional, AC only general-use snap switch.

D. Body and Handle Color: WHITE thermoplastic with nylon toggle handle.

E. Indicator Light: Lighted handle type switch; clear polycarbonate handle.

F. Locator Light: Lighted handle type switch; clear polycarbonate handle.

G. Ratings:
1. Voltage: 120-277 volts, AC.
2. Current: 20 amperes.

2.2 WALL DIMMERS

A Manufacturers:
1. Lutron Nova-T Series.
2. Substitutions: Refer to Division 1.

B. Description: NEMA WD 1; Semiconductor dimmer with RFI filter for incandescent lamps, type as indicated on Drawings.

C. Body and Handle: WHITE thermoplastic with preset and linear slide.

D. Voltage: 120 volts, AC.

E. Power Rating: Match load indicated on Drawings; 600 watts minimum.

2.3 RECEPTACLES

A. Manufacturers:
1. Hubbell HBL5362 Series.
2. Substitutions: Refer to Division 1.

B. The following receptacles shall be the color(s) specified herein:
1. Duplex - normal power: HBL5362__
2. Duplex - emergency power (red): HBL5362R
3. GFCI - normal power: GF5362__
4. GFCI - emergency power (red): GF5362R
5. Corrosion resistant (yellow): HBL53CM62
6. Isolated ground type (orange): IG5362
7. Surge suppression type (blue): HBL5362S
8. Isolated/surge type (blue): IG5362S
9. Quadplex receptacles (all types): (Two duplex devices of the type indicated on the Drawings installed in a common two-gang outlet box with single wall plate)

C. Description: NEMA WD 1, Heavy-Duty, Specification Grade, flush, nylon face, back and side wired, general use receptacle with slotted screws.

D. Device Body Color: NORMAL power duplex and NORMAL power GFCI duplex - WHITE nylon face.

E. Configuration: NEMA WD 6, type as specified and indicated.

F. Convenience Receptacle: NEMA Type 5-20R.

G. GFCI Receptacle: Convenience receptacle with integral ground fault circuit interrupter (GFCI) to meet regulatory requirements. Provide as indicated on Drawings and where required by NEC and local codes.

2.3 WALL PLATES

A Decorative Cover Plate (shall be of the same manufacture as the wiring device):
1. Hubble
2. Substitutions: Refer to Division 1

B. Wall plates for all wiring devices shall be stainless steel.

C. Intermittent Use Weatherproof Cover Plate: Gasketed zinc die cast, commercial grade, with hinged gasketed device cover and UL listed for wet or damp locations with cover closed, in accordance with NEC Article 410-57 (a) and (b) (2). Provide for outdoor portable tools, gardening tools, radios, televisions, etc.
1 Hubbell Model CWP8H (duplex) or CWP26H (GFCI), both horizontally mounted.
2. Substitutions: Refer to Division 1.

D. Continuous Use Weatherproof Cover Plate: Weatherproof covers for receptacles located in wet locations likely to be unattended and in use for long periods of time shall meet NEC

Article 410-57 (b) (1). Constructed of metallic, NEMA 3R rated, lockout/tagout feature with 1/4" padlock hasp, and bottom openings for heavy gauge cords. Provide for outdoor sprinkler system controllers, vending machines, pump motors, landscape lighting, holiday lights, etc.

1. Hubbell MX3200, vertically mounted.
2. Substitutions: Refer to Division 1.

PART 3 EXECUTION

3.1 EXAMINATION

A. Division 1 - Coordination and Meetings: Verification of existing conditions prior to beginning work.

B. Verify that outlet boxes are installed at proper height.

C. Verify that wall openings are neatly cut and will be completely covered by wall plates.

D. Verify that floor boxes are adjusted properly.

E. Verify that branch circuit wiring installation is completed, tested, and ready for connection to wiring devices.

F. Verify that openings in access floor are in proper locations.

3.2 PREPARATION

A. Provide extension rings to bring outlet boxes flush with finished surface.

B. Clean debris from outlet boxes.

3.3 INSTALLATION

A. Install in accordance with NECA "Standard of Installation."

B. Install devices plumb and level.

C. Phase, neutral and ground conductors shall be terminated on wiring device posts only. Do NOT use back-wiring stab-ins.

D. Install switches with OFF position down.

E. Install wall dimmers to achieve full rating specified and indicated after derating for ganging as instructed by manufacturer.

F. Do not share neutral conductor on load side of dimmers.

G. Install receptacles with grounding pole on top.

H. Connect wiring device grounding terminal to branch circuit equipment grounding conductor.

I. Install decorative plates on switch, receptacle, and blank outlets in finished areas.

J. Connect wiring devices by wrapping conductor around screw terminal.

K. Use jumbo size plates for outlets installed in masonry walls.

L. Install galvanized steel plates on outlet boxes and junction boxes in unfinished areas, above accessible ceilings, and on surface mounted outlets.

3.4 INTERFACE WITH OTHER PRODUCTS

A. Coordinate locations of outlet boxes provided under Section 26 6130 to obtain mounting heights specified and indicated on drawings.

B. Install wall switch 48 inches above finished floor.

C. Install convenience receptacle 18 inches above finished floor.

D. Install convenience receptacle 6 inches above backsplash of counter, coordinate with Architectural Drawings.

E. Install dimmer 48 inches above finished floor.

F. Install telephone jack 18 inches above finished floor.

G. Install telephone jack for side-reach wall telephone to position top of telephone at 54 inches above finished floor.

H. Install telephone jack for forward-reach wall telephone to position top of telephone at 48 inches above finished floor.

3.4FIELD QUALITY CONTROL

A. Division 1 - Quality Control, Starting of Systems, Field inspection, testing, adjusting, and balancing.

B. Inspect each wiring device for defects.

C. Operate each wall switch with circuit energized and verify proper operation.

D. Verify that each receptacle device is energized.

E. Test each receptacle device for proper polarity.

F. Test each GFCI receptacle device for proper operation.

G. Verify that each telephone jack is properly connected and circuit is operational.

3.5 ADJUSTING

A. Division 1 - Contract Closeout and Starting of Systems: Adjusting installed work.

B. Adjust devices and wall plates to be flush and level.

3.6 CLEANING

A. Division 1 - Contract Closeout: Cleaning installed work.

B. Clean exposed surfaces to remove splatters and restore finish.

END OF SECTION

STATE OF OKLAHOMA
DEPARTMENT OF TRANSPORTATION

PLAN OF PROPOSED

BECKHAM COUNTY MAINTENANCE FACILITY

SAYRE, OKLAHOMA
DIVISION 05
BECKHAM COUNTY

J/P No.: 30884(04)
PROJECT No.: BSAP-205E(035)FM

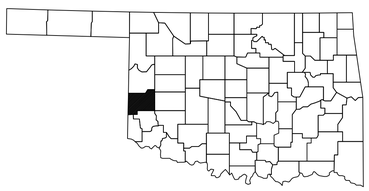

STATE MAP
N.T.S.

CALL OKIE
TWO WORKING DAYS
BEFORE YOU DIG
1-800-522-6543

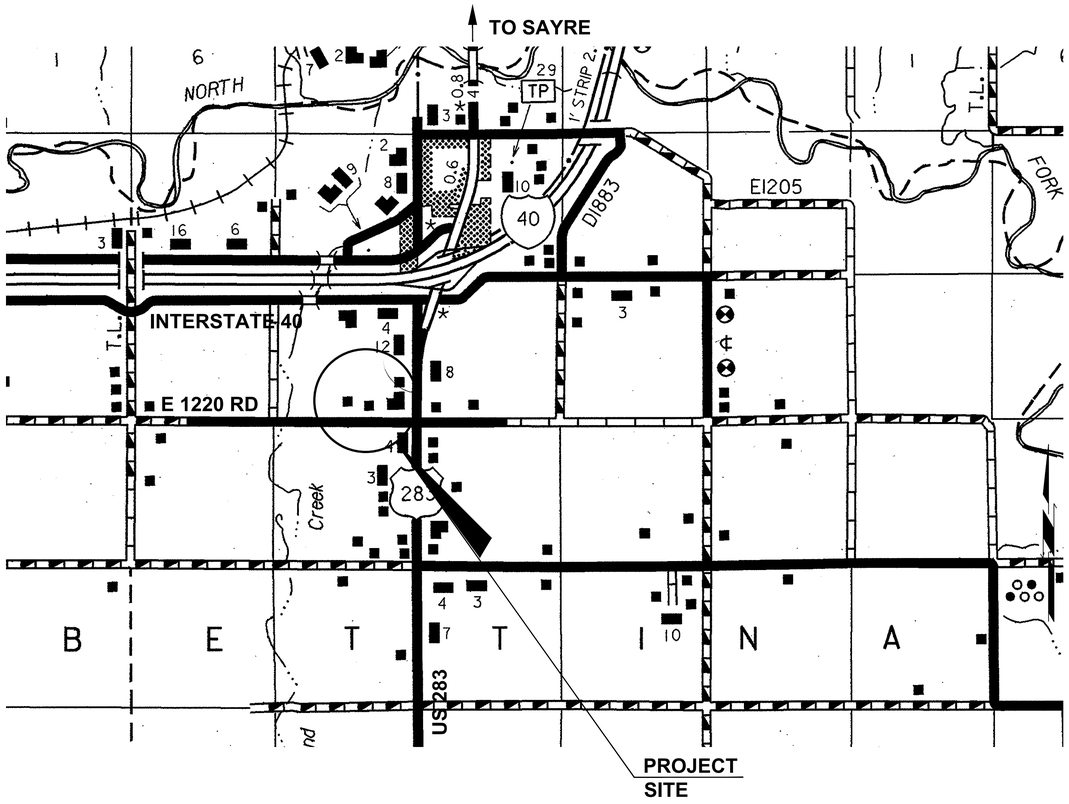

PROJECT LOCATION MAP
1" = 2640'

UTILITY COMPANIES SERVING OR CROSSING SITE:

WATER - CITY OF SAYRE, GUY HYLTON, (580) 928-2260
SEWER - CITY OF SAYRE, GUY HYLTON, (580) 928-2260
ELECTRIC - NORTHFORK ELECTRIC CO-OP, RICHARD BOWDRE, (580) 928-3366
NATURAL GAS - CENTERPOINT ENERGY, BRIAN OVERFIELD, (580) 482-2853
TELEPHONE - AT&T, (580) 225-3300

ALL CONSTRUCTION SHALL BE IN ACCORDANCE WITH THE OKLAHOMA DEPARTMENT OF TRANSPORTATION 2009 STANDARD SPECIFICATIONS FOR HIGHWAY CONSTRUCTION AND SPECIAL PROVISIONS. PROJECT SPECIFICATIONS GOVERN OVER STANDARD SPECIFICATIONS.

1 ADDENDUM NO. A - 01/30/2020

SHEET INDEX

CIVIL
C0.0 - TITLE SHEET
1 - SURVEY SHEET
C0.1 - NOTES & LEGEND
C1.0 - DEMOLITION PLAN
C2.0 - OVERALL SITE PLAN
C2.1 - SITE PLAN
C2.2 - SITE PLAN
C2.3 - SITE PLAN
C2.4 - COORDINATE PLAN
C2.5 - COORDINATE PLAN
C2.6 - COORDINATE PLAN
C3.0 - OVERALL GRADING PLAN
C3.1 - GRADING PLAN
C3.2 - GRADING PLAN
C3.3 - GRADING PLAN
C3.4 - STORM SEWER PLAN
C3.5 - STORM SEWER PLAN
C3.6 - STORM SEWER PLAN
C4.0 - OVERALL UTILITY PLAN
C4.1 - UTILITY PLAN
C4.2 - UTILITY PLAN
C4.3 - UTILITY PLAN
C4.4 - FUELING PLAN
C5.0 - EVAPORATION POND
C6.0 - EROSION CONTROL PLAN
C6.1 - EROSION CONTROL DETAILS
C7.0 - DETAILS
C7.1 - DETAILS
C7.2 - DETAILS
C7.3 - TANK PAD DETAILS
C7.4 - FENCE DETAILS
C7.5 - UTILITY DETAILS
C7.6 - FLEXAMAT DETAIL 1

MAINTENANCE BUILDING
G1.0 - CODE ANALYSIS PLAN
MA2.0 - FLOOR PLAN
MA3.0 - ROOF PLAN
MA4.0 - ELEVATIONS
MA5.0 - BUILDING SECTIONS
MA6.0 - WALL SECTIONS
MA6.1 - WALL SECTIONS
MA7.0 - SECTION DETAILS
MA9.0 - TOILET ELEVATIONS
MA10.0 - ROOM FINISH SCHEDULE
MA11.0 - DOOR SCHEDULE
MA11.1 - DOOR DETAILS
MA11.2 - DOOR DETAILS
MA12.0 - REFLECTED CEILING PLAN
S0.1 - GENERAL STRUCTURAL NOTES
S0.2 - SPECIAL INSPECTIONS
S0.3 - TYPICAL DETAILS
S0.4 - TYPICAL DETAILS
MS1.1 - FLOOR PLAN
MS2.1 - BUILDING DETAILS
MS3.1 - OVERHEAD HOIST DETAILS
M0.1 - MECHANICAL NOTES ,LEGEND & ABBREVIATIONS
M0.2 - MECHANICAL DETAILS
MM1.1 - MECHANICAL HVAC PLANS
MM2.1 - MECHANICAL SCHEDULES
ME0.1 - ELECTRICAL NOTES AND LEGEND
ME0.2 - ELECTRICAL RISER AND SCHEDULES
ME0.3 - ELECTRICAL SCHEDULES
ME1.1 - ELECTRICAL SITE PLAN
ME2.1 - ELECTRICAL LIGHTING PLAN
ME3.1 - ELECTRICAL POWER PLAN
ME4.1 - ELECTRICAL SYSTEMS PLAN
ME5.1 - ELECTRICAL DETAILS
P0.1 - PLUMBING NOTES, LEGEND AND SYMBOLS
P0.2 - PLUMBING DETAILS
MP1.1 - PLUMBING PLANS
MP2.1 - PLUMBING SCHEDULES

EQUIPMENT SHED
VA2.0 - FLOOR PLAN
VA4.0 - ELEVATIONS & SECTIONS
VA6.0 - WALL SECTIONS & DETAILS
VA6.1 - DETAILS
VS1.1 - FOUNDATION PLAN
VS2.1 - FOUNDATION PLAN
VS2.2 - FOUNDATION DETAILS
VM1.1 - MECHANICAL PLAN AND SCHEDULES
VP1.1 - PLUMBING PLAN AND SCHEDULES
CS1.1 - CATWALK DETAILS

SALT & MIX SHED
SA2.0 - PLAN, SECTION & ELEVATION
SA2.1 - PLAN, SECTION & ELEVATION
SS1.1 - FLOOR PLAN
SS2.1 - WALL AND FOOTING DETAILS

HOPPER STRUCTURE
HA2.0 - PLAN & ELEVATIONS
HS1.1 - FOUNDATION PLAN
HS1.2 - FRAMING PLAN
HS2.1 - FOUNDATION DETAILS
CS2.1 - CATWALK DETAILS 1

FUEL CANOPY
FA2.0 - PLAN & ELEVATIONS
FS1.1 - FRAMING PLAN
FS1.2 - FOUNDATION DETAILS
FS1.3 - FRAMING DETAILS

ODOT STANDARDS
PCES-4-1 - PREFORMED END SECTIONS
SMD-3-1 - STANDARD MEDIAN DRAINS
SPI-4-1 - STANDARD PIPE INSTALLATION
SPB-1-4 - STANDARD PIPE BEDDING
RWF3-2-2 - CHAIN LINK FENCE DETAIL
WCR-3-1 - WHEELCHAIR RAMPS

1 UPDATES TO SHEET INDEX

Note: These drawings and related design calculations were performed solely for the construction of the ODOT Division 5 Beckham County Maintenance Facility in Sayre, Oklahoma.

The layout and design shown is not intended to be utilized at any other site without site adaptation by the Engineer and Architectural firm responsible for its original design.

CEC

MATCHLINE (THIS SHEET)

PROPOSED CHAINLINK SLIDING GATE (28' CLEAR)(OPENS NORTH) (SEE C7.4)

PROPOSED 6' CHAINLINK FENCE W/ CLIMB BARRIER (SEE C7.4)

28.0'

R10

R40

R20

R30

PROPOSED 5' CURB TRANSITION (SEE C7.0)

PROPOSED ADA SYMBOL MARKING (SEE C7.1)

10.0' (TYP)

11.0'

5.0'

18.0' (TYP)

20.0'

R5

4

1

9

TF

PROPOSED 6" CURB & GUTTER (TYP) (SEE C7.0)

6.7'

6.0'

7.2'

PROPOSED STORM SHELTER (BY ODOT)

PROPOSED ADA RAMP (TYPE 'D', NO TACTILE) (SEE C7.0)

SLOPE @ 2.0% FOR 8.33' (TYP)

PROPOSED ADA SIGN (MOUNT FLUSH TO BUILDING W/ SCREWS COMPATIBLE W/ METAL BUILDING)

PROPOSED SIDEWALK (TYP) (SEE C7.1)

SLOPE @ 5.0% FOR 3.33' (TYP)

MAINTENANCE BUILDING (SEE ARCHITECTURAL & STRUCTURAL PLANS FOR DETAILS)

33.0'

55.2'

PROPOSED WASTE OIL TANK W/ 2 BOLLARDS (SEE MEP PLANS)

NOTE:

1. ALL RADIUS CALLOUTS ARE TO FACE OF CURB.

LEGEND

- LIGHT-DUTY CONCRETE
- HEAVY-DUTY CONCRETE
- SIDEWALK
- MILLINGS
- PROPOSED BUILDING

NORTH ARROW
SCALE 1"=10'
0 10' 20'

MATCHLINE (THIS SHEET)

PLOT DATE: 2/3/2020 12:38 PM

CEC

CEC CORPORATION
4555 W. MEMORIAL ROAD
OKLAHOMA CITY, OKLAHOMA 73142
P: 405.753.4200
WWW.CORNETCEC.COM

STATE OF OKLAHOMA CERTIFICATE OF AUTHORIZATION
CA 3873 EXPIRES JUNE 30, 2020

COPYRIGHT © 2019 CEC. ALL RIGHTS RESERVED.
THIS DRAWING IS PROPERTY OF CEC. ANY
REPRODUCTION OR USE OF THIS DRAWING
WITHOUT EXPRESS WRITTEN AUTHORIZATION OF
CEC IS PROHIBITED.

LICENSED PROFESSIONAL ENGINEER
AUSTIN C. BURTON
26508
01/30/2020
OKLAHOMA

REVISION HISTORY

NO.	DESCRIPTION	DATE
1	ADDENDUM A	01/30/2020

SUBMITTAL: CONSTRUCTION DOCUMENTS

DATE:	09/21/2018
PROJECT NO:	180131.0018.06
DESIGNED BY:	ACB
DRAWN BY:	JLP
APPROVED BY:	ACB
SCALE:	AS SHOWN

MAINTENANCE FACILITY

DIVISION 05 - BECKHAM COUNTY
OKLAHOMA DEPARTMENT OF TRANSPORTATION
SAYRE, OKLAHOMA

SHEET NAME
SITE PLAN

SHEET
C2.1

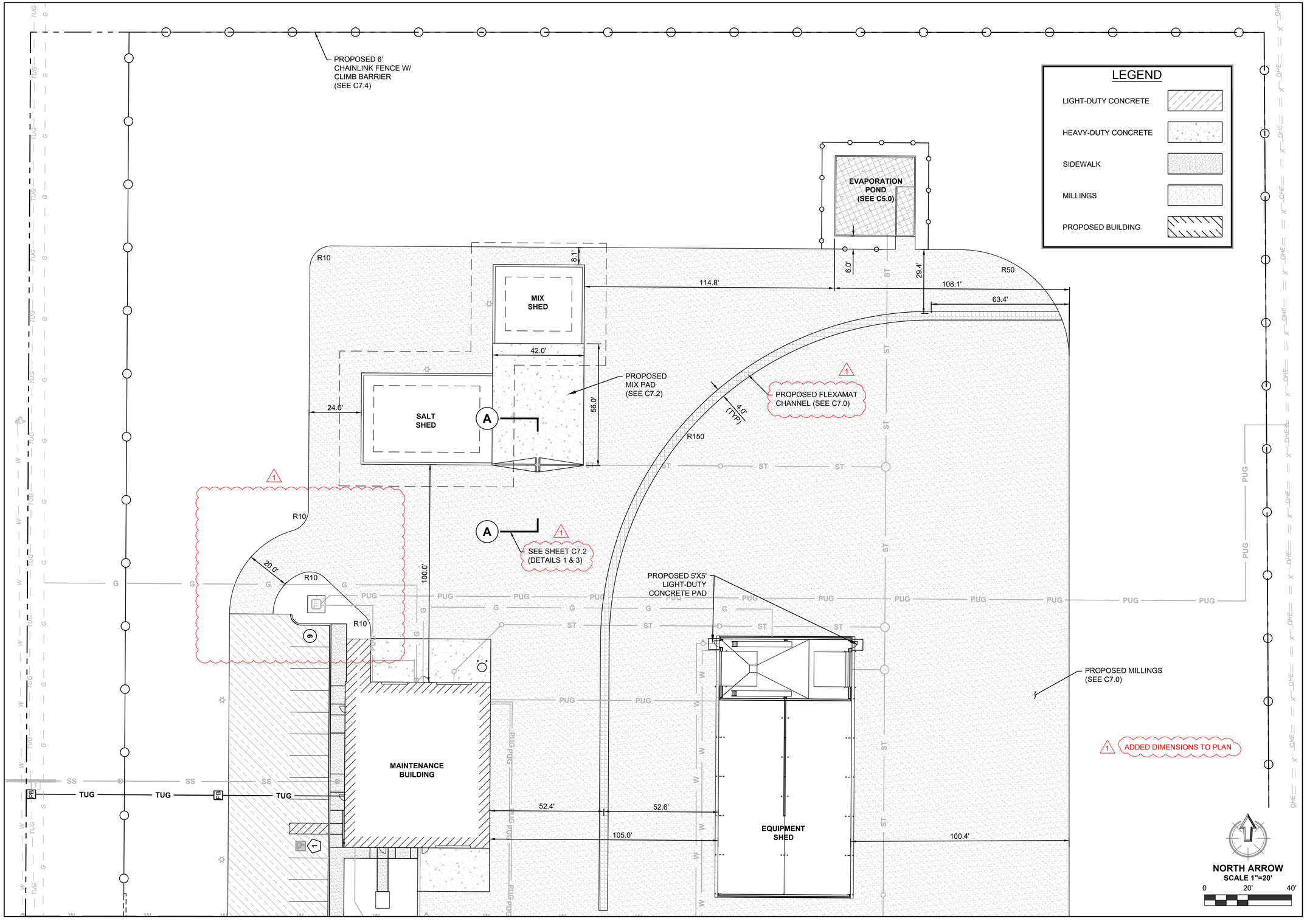

PLOT DATE: 2/3/2020 12:38 PM

CEC

CEC CORPORATION
4555 W. MEMORIAL ROAD
OKLAHOMA CITY, OKLAHOMA 73142
P: 405.753.4200
WWW.CORNETCEC.COM

STATE OF OKLAHOMA CERTIFICATE OF AUTHORIZATION
CA 1361 EXPIRES 06/30/2020

COPYRIGHT © 2019 CEC. ALL RIGHTS RESERVED.
THIS DRAWING IS PROPERTY OF CEC. ANY REPRODUCTION OR USE OF THIS DRAWING WITHOUT EXPRESS WRITTEN AUTHORIZATION OF CEC IS PROHIBITED.

LICENSED PROFESSIONAL ENGINEER
AUSTIN C. BURTON
01/30/2020
26508
OKLAHOMA

REVISION HISTORY

NO.	DESCRIPTION	DATE
1	ADDENDUM A	01/30/2020

SUBMITTAL: CONSTRUCTION DOCUMENTS
DATE: 09/21/2018
PROJECT NO: 190131.0018.06
DESIGNED BY: ACB
DRAWN BY: JLP
APPROVED BY: ACB
SCALE: AS SHOWN

MAINTENANCE FACILITY

DIVISION 05 - BECKHAM COUNTY
OKLAHOMA DEPARTMENT OF TRANSPORTATION
SAYRE, OKLAHOMA

SHEET NAME
SITE PLAN

SHEET
C2.3

MATCHLINE (THIS SHEET)

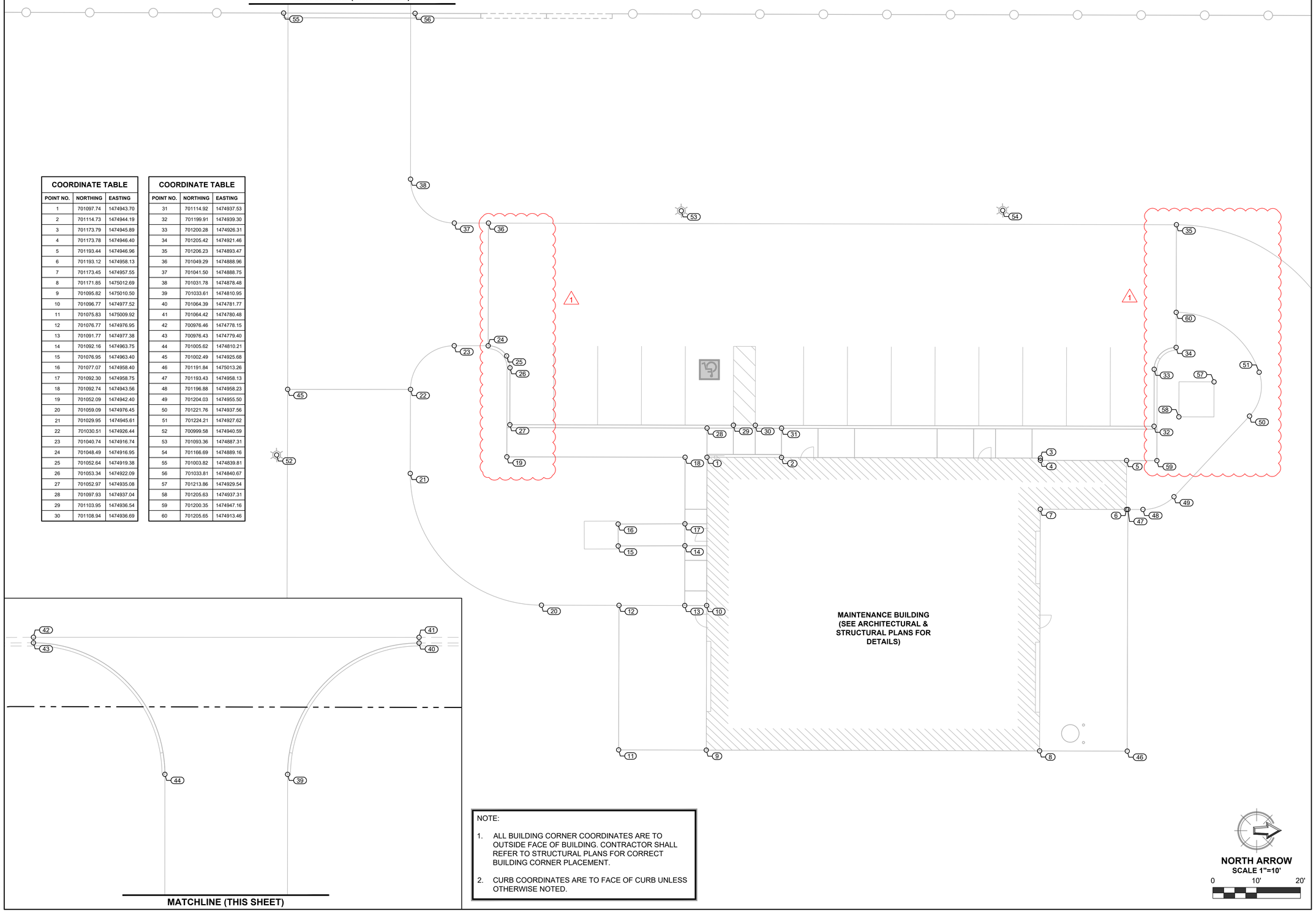

COORDINATE TABLE		
POINT NO.	NORTHING	EASTING
1	701097.74	1474943.70
2	701114.73	1474944.19
3	701173.79	1474945.89
4	701173.78	1474946.40
5	701193.44	1474946.96
6	701193.12	1474958.13
7	701173.45	1474957.55
8	701171.85	1475012.69
9	701095.82	1475010.50
10	701096.77	1474977.52
11	701075.83	1475009.92
12	701076.77	1474976.95
13	701091.77	1474977.38
14	701092.16	1474963.75
15	701076.95	1474963.40
16	701077.07	1474958.40
17	701092.30	1474958.75
18	701092.74	1474943.56
19	701052.09	1474942.40
20	701059.09	1474976.45
21	701029.95	1474945.61
22	701030.51	1474926.44
23	701040.74	1474916.74
24	701048.49	1474916.95
25	701052.64	1474919.38
26	701053.34	1474922.09
27	701052.97	1474935.08
28	701097.93	1474937.04
29	701103.95	1474936.54
30	701108.94	1474936.69

COORDINATE TABLE		
POINT NO.	NORTHING	EASTING
31	701114.92	1474937.53
32	701199.91	1474939.30
33	701200.28	1474926.31
34	701205.42	1474921.46
35	701206.23	1474893.47
36	701049.29	1474888.96
37	701041.50	1474888.75
38	701031.78	1474878.48
39	701033.61	1474810.95
40	701064.39	1474781.77
41	701064.42	1474780.48
42	700976.46	1474778.15
43	700976.43	1474779.40
44	701005.62	1474810.21
45	701002.49	1474925.68
46	701191.84	1475013.26
47	701193.43	1474958.13
48	701196.88	1474958.23
49	701204.03	1474955.50
50	701221.76	1474937.56
51	701224.21	1474927.62
52	700999.58	1474940.59
53	701093.36	1474887.31
54	701166.69	1474889.16
55	701003.82	1474839.81
56	701033.81	1474840.67
57	701213.86	1474929.54
58	701205.63	1474937.31
59	701200.35	1474947.16
60	701205.65	1474913.46

MATCHLINE (THIS SHEET)

NOTE:

1. ALL BUILDING CORNER COORDINATES ARE TO OUTSIDE FACE OF BUILDING. CONTRACTOR SHALL REFER TO STRUCTURAL PLANS FOR CORRECT BUILDING CORNER PLACEMENT.
2. CURB COORDINATES ARE TO FACE OF CURB UNLESS OTHERWISE NOTED.

PLOT DATE: 2/3/2020 12:38 PM

CEC

CEC CORPORATION
4555 W. MEMORIAL ROAD
OKLAHOMA CITY, OKLAHOMA 73142
P: 405.753.4200
WWW.CORPECTEC.COM

STATE OF OKLAHOMA
CA CERTIFICATE OF AUTHORIZATION
CA 3873 EXPIRES 06/30/2020

COPYRIGHT © 2019 CEC. ALL RIGHTS RESERVED.
THIS DRAWING IS PROPERTY OF CEC. ANY REPRODUCTION OR USE FOR OTHER WORK WITHOUT EXPRESS WRITTEN AUTHORIZATION OF CEC IS PROHIBITED.

LICENSED PROFESSIONAL ENGINEER
AUSTIN C. BURTON
01/30/2020
26508
OKLAHOMA

REVISION HISTORY

NO.	DESCRIPTION	DATE
1	ADDENDUM A	01/30/2020

SUBMITTAL: CONSTRUCTION DOCUMENTS
DATE: 09/21/2018
PROJECT NO. 180131.0018.06
DESIGNED BY: ACB
DRAWN BY: JLP
APPROVED BY: ACB
SCALE: AS SHOWN

MAINTENANCE FACILITY

DIVISION 05 - BECKHAM COUNTY
OKLAHOMA DEPARTMENT OF TRANSPORTATION

SAYRE, OKLAHOMA

SHEET NAME

COORDINATE PLAN

SHEET

C2.4

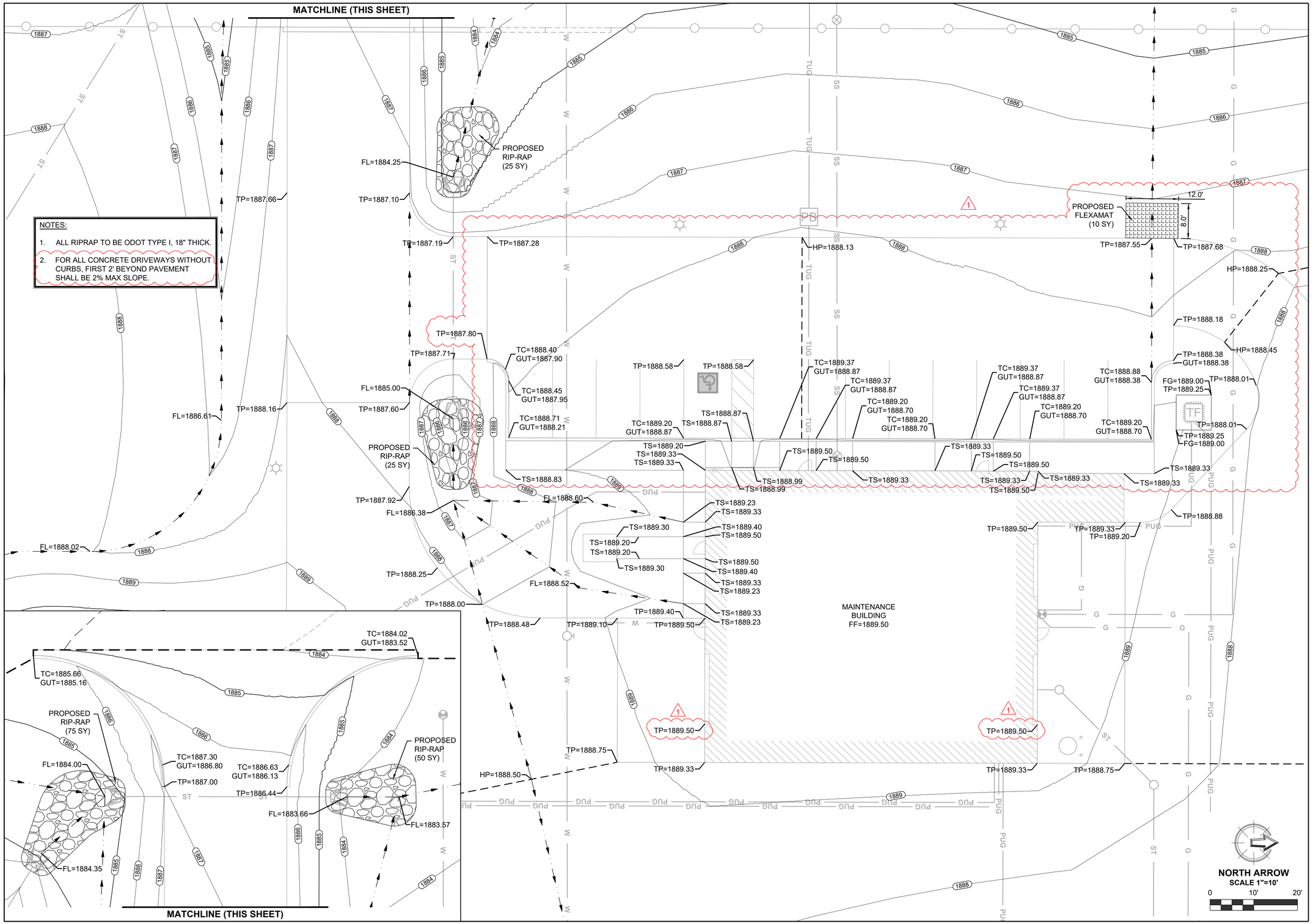

PLOT DATE: 2/3/2020 12:39 PM

CEC

CEC CORPORATION
4555 W. MEMORIAL ROAD
OKLAHOMA CITY, OKLAHOMA 73142
P: 405.753.4200
STATE OF OK CERTIFICATE OF AUTHORIZATION CA 1459 EXPIRES JUNE 30, 2020
WWW.CORPCTCEC.COM

COPYRIGHT © 2019 CEC. ALL RIGHTS RESERVED.
THIS DRAWING IS PROPERTY OF CEC. ANY REPRODUCTION OR USE OF THIS DRAWING WITHOUT EXPRESS WRITTEN AUTHORIZATION OF CEC IS PROHIBITED.

LICENSED PROFESSIONAL ENGINEER
AUSTIN C. BURTON
01/30/2020
26508
OKLAHOMA

REVISION HISTORY

NO.	DESCRIPTION	DATE
1	ADDENDUM A	01/30/2020

SUBMITTAL:	CONSTRUCTION DOCUMENTS
DATE:	09/21/2018
PROJECT NO.	180131.0018.06
DESIGNED BY:	ACB
DRAWN BY:	JLP
APPROVED BY:	ACB
SCALE:	AS SHOWN

MAINTENANCE FACILITY

DIVISION 05 - BECKHAM COUNTY
OKLAHOMA DEPARTMENT OF TRANSPORTATION
SAYRE, OKLAHOMA

SHEET NAME
GRADING PLAN

SHEET
C3.1

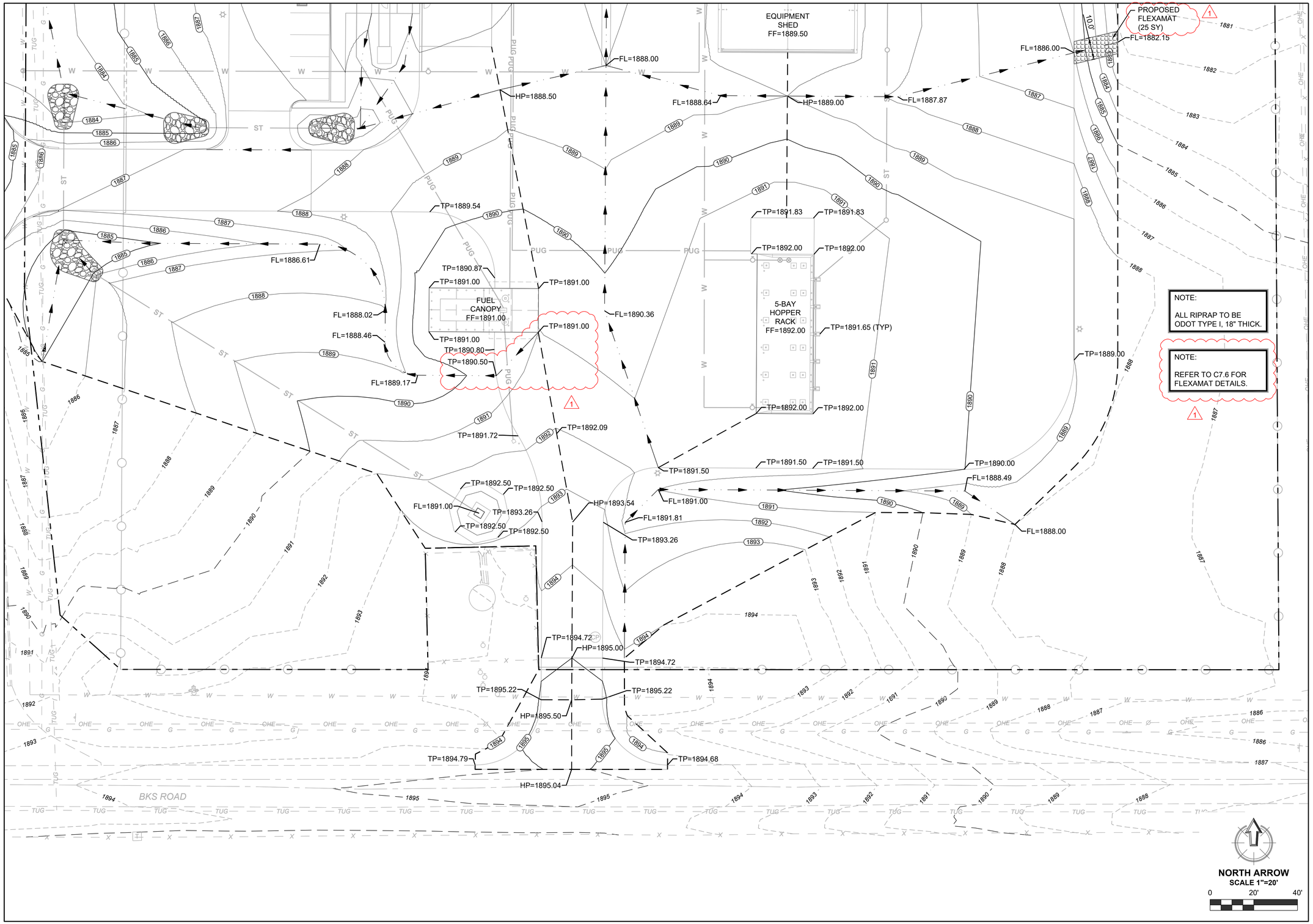

PLOT DATE: 2/3/2020 12:39 PM

CEC

CEC CORPORATION
4555 W. MEMORIAL ROAD
OKLAHOMA CITY, OKLAHOMA 73142
P: 405.753.4200
WWW.CORNETCEC.COM

STATE OF OKLAHOMA CERTIFICATE OF AUTHORIZATION
CA 3873 EXP. JUNE 30, 2020

COPYRIGHT © 2019 CEC. ALL RIGHTS RESERVED.
THIS DRAWING IS PROPERTY OF CEC. ANY REPRODUCTION OR USE OF THIS DRAWING WITHOUT EXPRESS WRITTEN AUTHORIZATION OF CEC IS PROHIBITED.

LICENSED PROFESSIONAL ENGINEER
AUSTIN C. BURTON
01/30/2020
26508
OKLAHOMA

REVISION HISTORY

NO.	DESCRIPTION	DATE
1	ADDENDUM A	01/30/2020

SUBMITTAL: CONSTRUCTION DOCUMENTS
DATE: 09/21/2018
PROJECT NO: 180131.0018.06
DESIGNED BY: ACB
DRAWN BY: JLP
APPROVED BY: ACB
SCALE: AS SHOWN

MAINTENANCE FACILITY

DIVISION 05 - BECKHAM COUNTY
OKLAHOMA DEPARTMENT OF TRANSPORTATION
SAYRE, OKLAHOMA

SHEET NAME
GRADING PLAN

SHEET
C3.2

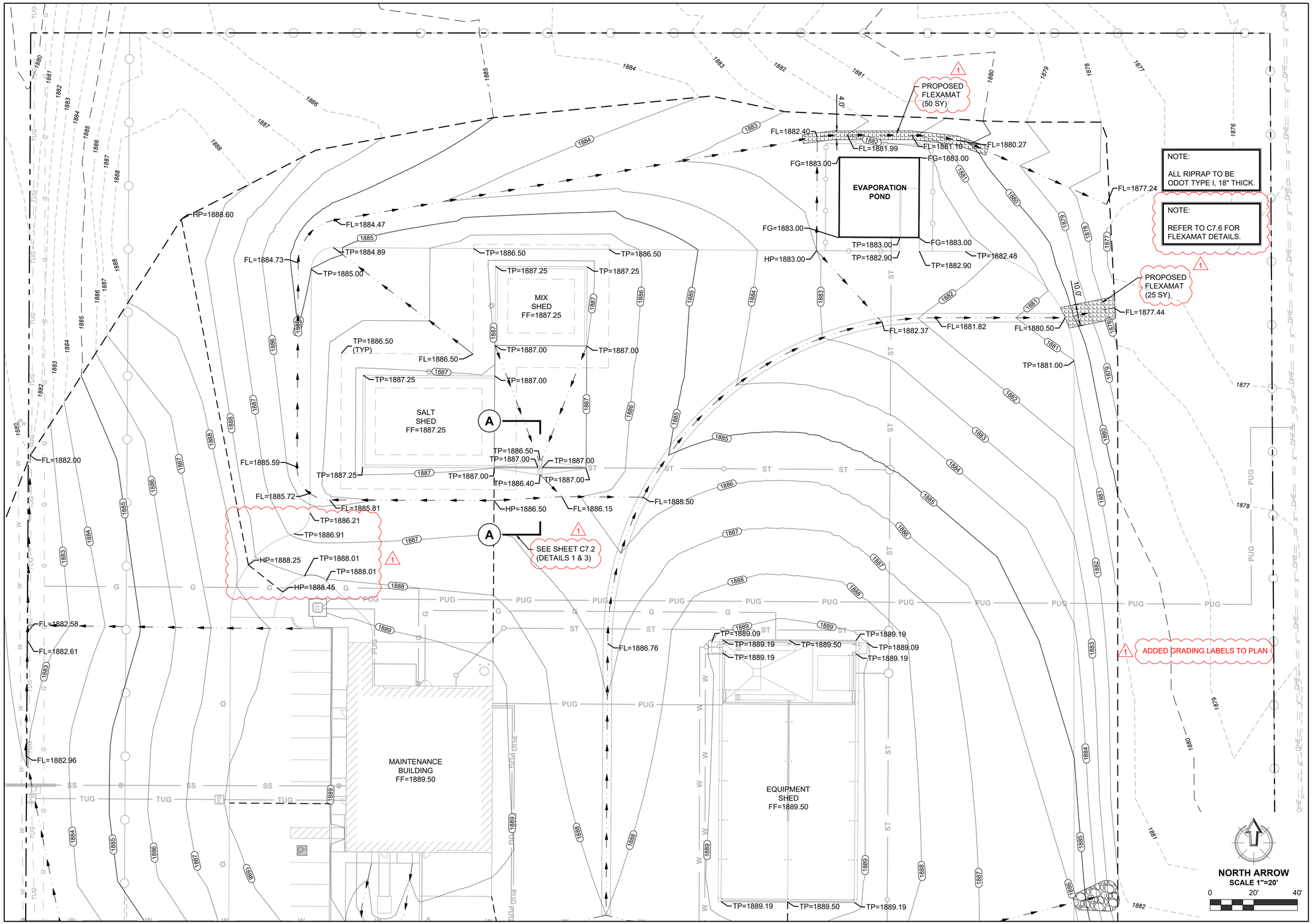

PLOT DATE: 2/3/2020 12:39 PM

CEC

CEC CORPORATION
4555 W. MEMORIAL ROAD
OKLAHOMA CITY, OKLAHOMA 73142
P: 405.753.4200
WWW.CORPCTEC.COM

STATE OF OKLAHOMA CERTIFICATE OF AUTHORIZATION NO. 2003-0001

COPYRIGHT © 2019 CEC. ALL RIGHTS RESERVED.
THIS DRAWING IS PROPERTY OF CEC. ANY REPRODUCTION OR USE IN WHOLE OR IN PART WITHOUT EXPRESS WRITTEN AUTHORIZATION OF CEC IS PROHIBITED.

LICENSED PROFESSIONAL ENGINEER
AUSTIN C. BURTON
26508
OKLAHOMA
01/30/2020

REVISION HISTORY

NO.	DESCRIPTION	DATE
1	ADDENDUM A	01/30/2020

SUBMITTAL:	CONSTRUCTION DOCUMENTS
DATE:	09/21/2018
PROJECT NO:	180131.0018.06
DESIGNED BY:	ACB
DRAWN BY:	JLP
APPROVED BY:	ACB
SCALE:	AS SHOWN

MAINTENANCE FACILITY

DIVISION 05 - BECKHAM COUNTY
OKLAHOMA DEPARTMENT OF TRANSPORTATION
SAYRE, OKLAHOMA

SHEET NAME
GRADING PLAN

SHEET
C3.3

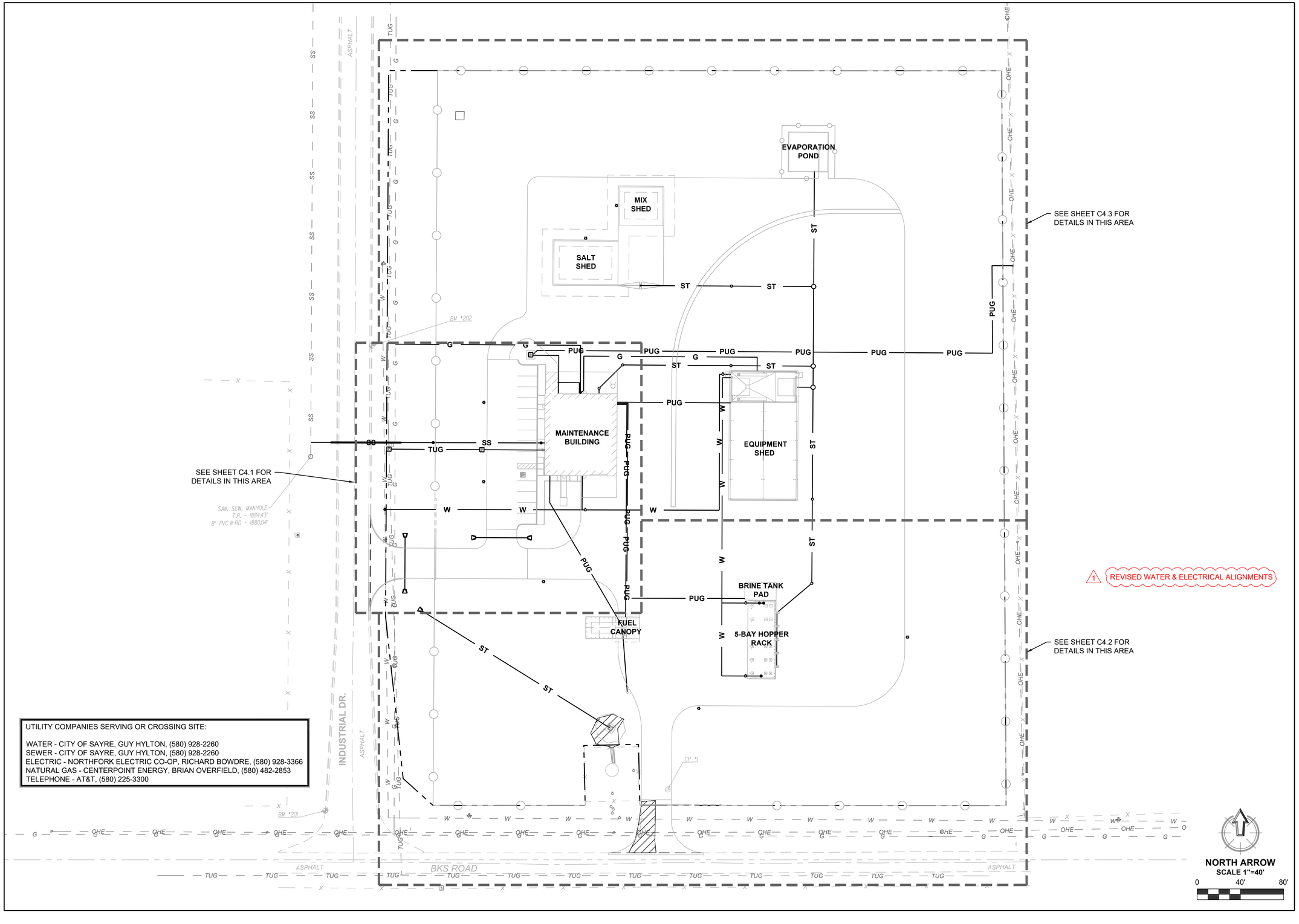

UTILITY COMPANIES SERVING OR CROSSING SITE:

WATER - CITY OF SAYRE, GUY HYLTON, (580) 928-2260
SEWER - CITY OF SAYRE, GUY HYLTON, (580) 928-2260
ELECTRIC - NORTHFORK ELECTRIC CO-OP, RICHARD BOWDRE, (580) 928-3366
NATURAL GAS - CENTERPOINT ENERGY, BRIAN OVERFIELD, (580) 482-2853
TELEPHONE - AT&T, (580) 225-3300

PLOT DATE: 2/3/2020 12:39 PM

CEC

CEC CORPORATION
4555 W. MEMORIAL ROAD
OKLAHOMA CITY, OKLAHOMA 73142
P: 405.753.4200
WWW.CORNETCEC.COM

STATE OF OKLAHOMA CERTIFICATE OF AUTHORIZATION
CA 3378 EXPIRES 06/30/2020

COPYRIGHT © 2019 CEC. ALL RIGHTS RESERVED.
THIS DRAWING IS PROPERTY OF CEC. ANY REPRODUCTION OR USE OF THIS DRAWING WITHOUT EXPRESS WRITTEN AUTHORIZATION OF CEC IS PROHIBITED.

LICENSED PROFESSIONAL ENGINEER
AUSTIN C. BURTON
01/30/2020
26508
OKLAHOMA

REVISION HISTORY

NO.	DESCRIPTION	DATE
1	ADDENDUM A	01/30/2020

SUBMITTAL: CONSTRUCTION DOCUMENTS
DATE: 09/21/2018
PROJECT NO: 180131.0018.06
DESIGNED BY: ACB
DRAWN BY: JLP
APPROVED BY: ACB
SCALE: AS SHOWN

MAINTENANCE FACILITY

DIVISION 05 - BECKHAM COUNTY
OKLAHOMA DEPARTMENT OF TRANSPORTATION
SAYRE, OKLAHOMA

SHEET NAME
OVERALL UTILITY PLAN

SHEET
C4.0

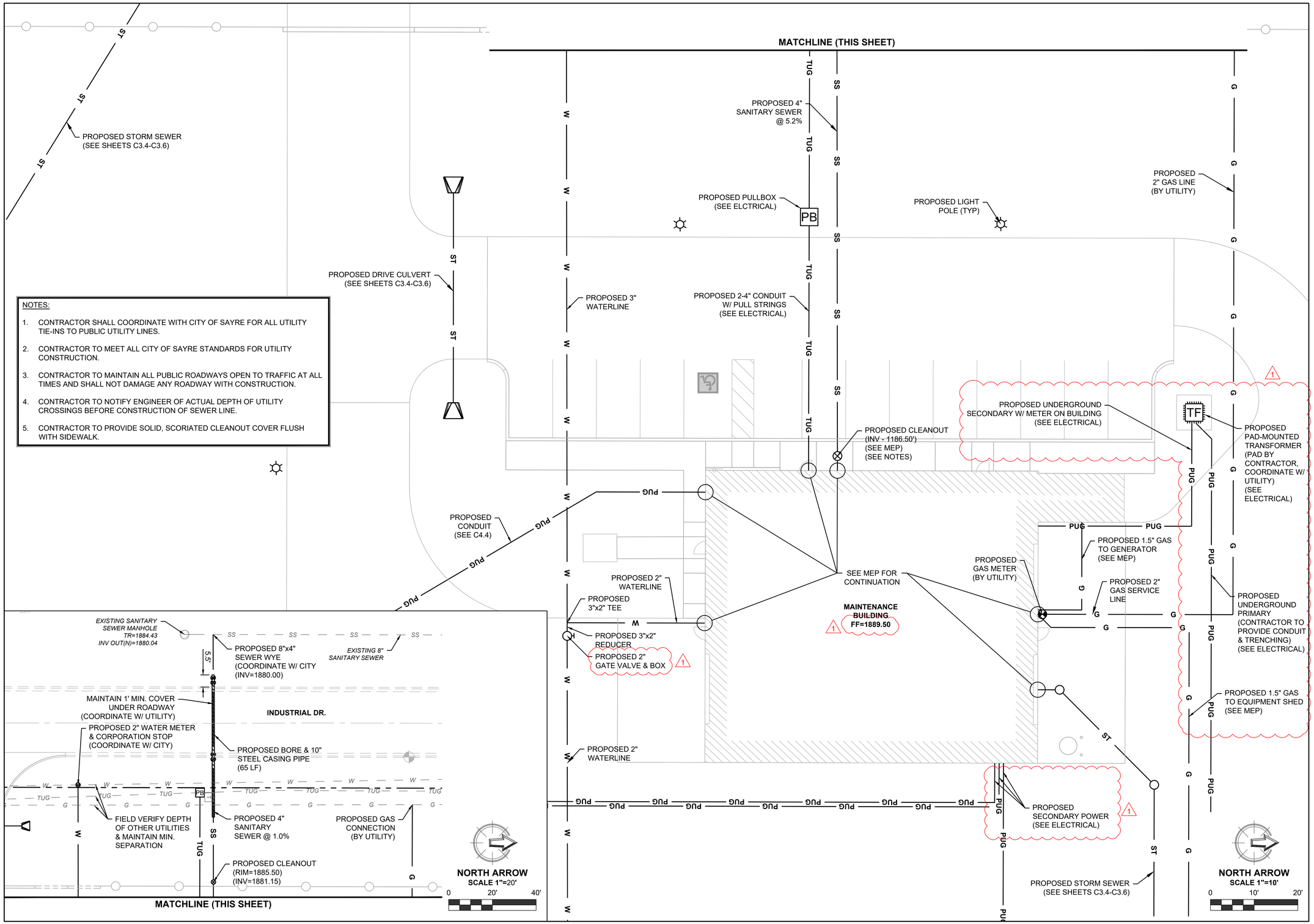

NOTES:

1. CONTRACTOR SHALL COORDINATE WITH CITY OF SAYRE FOR ALL UTILITY TIE-INS TO PUBLIC UTILITY LINES.
2. CONTRACTOR TO MEET ALL CITY OF SAYRE STANDARDS FOR UTILITY CONSTRUCTION.
3. CONTRACTOR TO MAINTAIN ALL PUBLIC ROADWAYS OPEN TO TRAFFIC AT ALL TIMES AND SHALL NOT DAMAGE ANY ROADWAY WITH CONSTRUCTION.
4. CONTRACTOR TO NOTIFY ENGINEER OF ACTUAL DEPTH OF UTILITY CROSSINGS BEFORE CONSTRUCTION OF SEWER LINE.
5. CONTRACTOR TO PROVIDE SOLID, SCORIATED CLEANOUT COVER FLUSH WITH SIDEWALK.

PLOT DATE: 2/3/2020 12:39 PM

CEC

CEC CORPORATION
4555 W. MEMORIAL ROAD
OKLAHOMA CITY, OKLAHOMA 73142
P: 405.753.4200
WWW.CORPECTEC.COM

STATE OF OKLAHOMA CERTIFICATE OF AUTHORIZATION
CA 1387 EXPIRES 06/30/2020

COPYRIGHT © 2019 CEC. ALL RIGHTS RESERVED.
THIS DRAWING IS PROPERTY OF CEC. ANY REPRODUCTION OR USE OF THIS DRAWING WITHOUT EXPRESS WRITTEN AUTHORIZATION OF CEC IS PROHIBITED.

LICENSED PROFESSIONAL ENGINEER
AUSTIN C. BURTON
01/30/2020
26508
OKLAHOMA

REVISION HISTORY

NO.	DESCRIPTION	DATE
1	ADDENDUM A	01/30/2020

SUBMITTAL: CONSTRUCTION DOCUMENTS
DATE: 09/21/2018
PROJECT NO: 190131.0018.06
DESIGNED BY: ACB
DRAWN BY: JLP
APPROVED BY: ACB
SCALE: AS SHOWN

MAINTENANCE FACILITY

DIVISION 05 - BECKHAM COUNTY
OKLAHOMA DEPARTMENT OF TRANSPORTATION
SAYRE, OKLAHOMA

SHEET NAME
UTILITY PLAN

SHEET
C4.1

PROPOSED 2" WATERLINE

PROPOSED STORM SEWER (SEE SHEETS C3.4-C3.6)

PROPOSED STORM SEWER (SEE SHEETS C3.4-C3.6)

PROPOSED SECONDARY POWER (SEE ELECTRICAL)

PROPOSED STORM SEWER (SEE SHEETS C3.4-C3.6)

PROPOSED CONDUIT (SEE C4.4)

PROPOSED 2" WATERLINE

PROPOSED 2" GATE VALVE & BOX

PROPOSED 1" FROST PROOF YARD HYDRANT (SET IN SLAB AT OUTSIDE EDGE OF CATWALK, FACING OUT)

PROPOSED 2" FROST-PROOF FILL HYDRANT (SEE C7.1) (SET IN SLAB, AT OUTSIDE EDGE OF CATWALK, FACING OUT)

PROPOSED 1" WATERLINE

EXISTING 8" WATERLINE

PROPOSED STORM SEWER (SEE SHEETS C3.4-C3.6)

PROPOSED CONDUIT (SEE C4.4)

PROPOSED 1" WATERLINE

PROPOSED 1" GATE VALVE & BOX

PROPOSED 1" FROST PROOF YARD HYDRANT (SET IN SLAB AT OUTSIDE EDGE OF CATWALK, FACING OUT)

PROPOSED LIGHTPOLE (TYP) (SEE ELECTRICAL)

EXISTING WATER TOWER (DO NOT DISTURB)

EXISTING WATER VALVES (DO NOT DISTURB)

EXISTING FIRE HYDRANT

EXISTING 8" WATERLINE

BKS ROAD

NORTH ARROW
SCALE 1"=20'
0 20' 40'

PLOT DATE: 2/3/2020 12:39 PM

CEC

CEC CORPORATION
4555 W. MEMORIAL ROAD
OKLAHOMA CITY, OKLAHOMA 73142
P: 405.753.4200
WWW.CORNETCEC.COM

STATE OF OK CERTIFICATE OF AUTHORIZATION
CA 3187 EXPIRES JUNE 30, 2020

COPYRIGHT © 2019 CEC. ALL RIGHTS RESERVED.
THIS DRAWING IS PROPERTY OF CEC. ANY REPRODUCTION IN PART OR WHOLE IS PROHIBITED WITHOUT EXPRESS WRITTEN AUTHORIZATION OF CEC'S PROPERTIES.

LICENSED PROFESSIONAL ENGINEER
AUSTIN C. BURTON
01/30/2020
26508
OKLAHOMA

REVISION HISTORY

NO.	DESCRIPTION	DATE
1	ADDENDUM A	01/30/2020

SUBMITTAL: CONSTRUCTION DOCUMENTS

DATE:	09/21/2018
PROJECT NO:	180131.0018.06
DESIGNED BY:	ACB
DRAWN BY:	JLP
APPROVED BY:	ACB
SCALE:	AS SHOWN

MAINTENANCE FACILITY

DIVISION 05 - BECKHAM COUNTY

OKLAHOMA DEPARTMENT OF TRANSPORTATION

SAYRE, OKLAHOMA

SHEET NAME

UTILITY PLAN

SHEET

C4.2

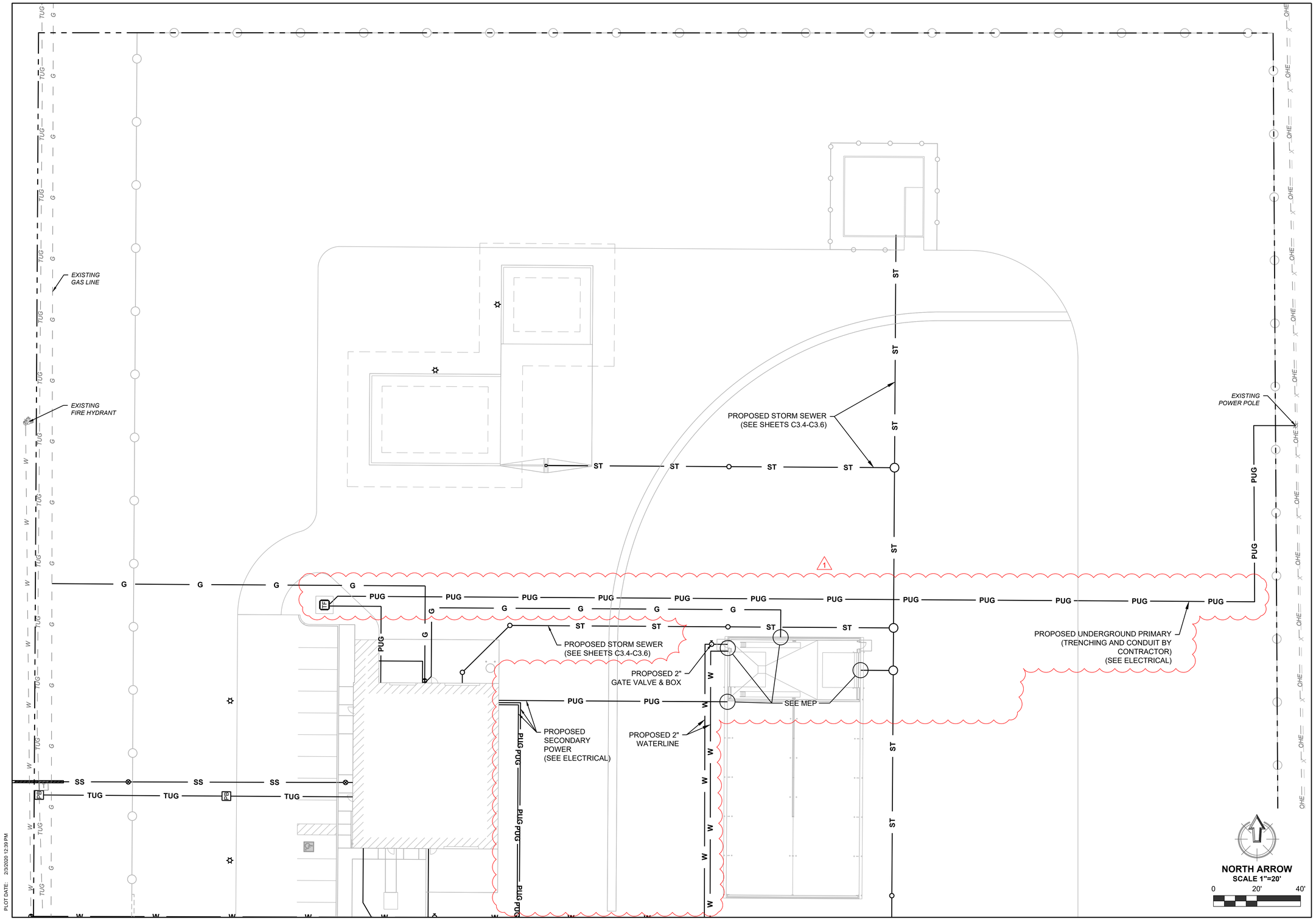

PLOT DATE: 2/3/2020 12:39 PM

CEC

CEC CORPORATION
4555 W. MEMORIAL ROAD
OKLAHOMA CITY, OKLAHOMA 73142
P: 405.753.4200
WWW.CORNETCEC.COM

STATE OF OK CERTIFICATE OF AUTHORIZATION
CA-2576 EXPIRES 06/30/2020

COPYRIGHT © 2019 CEC. ALL RIGHTS RESERVED.
THIS DRAWING IS PROPERTY OF CEC. ANY
REPRODUCTION OR USE FOR ANY PURPOSE
WITHOUT EXPRESS WRITTEN AUTHORIZATION OF
CEC IS PROHIBITED.

LICENSED PROFESSIONAL ENGINEER
AUSTIN C. BURTON
01/30/2020
26508
OKLAHOMA

REVISION HISTORY

NO.	DESCRIPTION	DATE
1	ADDENDUM A	01/30/2020

CONSTRUCTION DOCUMENTS

SUBMITTAL:	CONSTRUCTION DOCUMENTS
DATE:	09/21/2018
PROJECT NO:	180131.0018.06
DESIGNED BY:	ACB
DRAWN BY:	JLP
APPROVED BY:	ACB
SCALE:	AS SHOWN

MAINTENANCE FACILITY

DIVISION 05 - BECKHAM COUNTY
OKLAHOMA DEPARTMENT OF TRANSPORTATION
SAYRE, OKLAHOMA

SHEET NAME
UTILITY PLAN

SHEET
C4.3

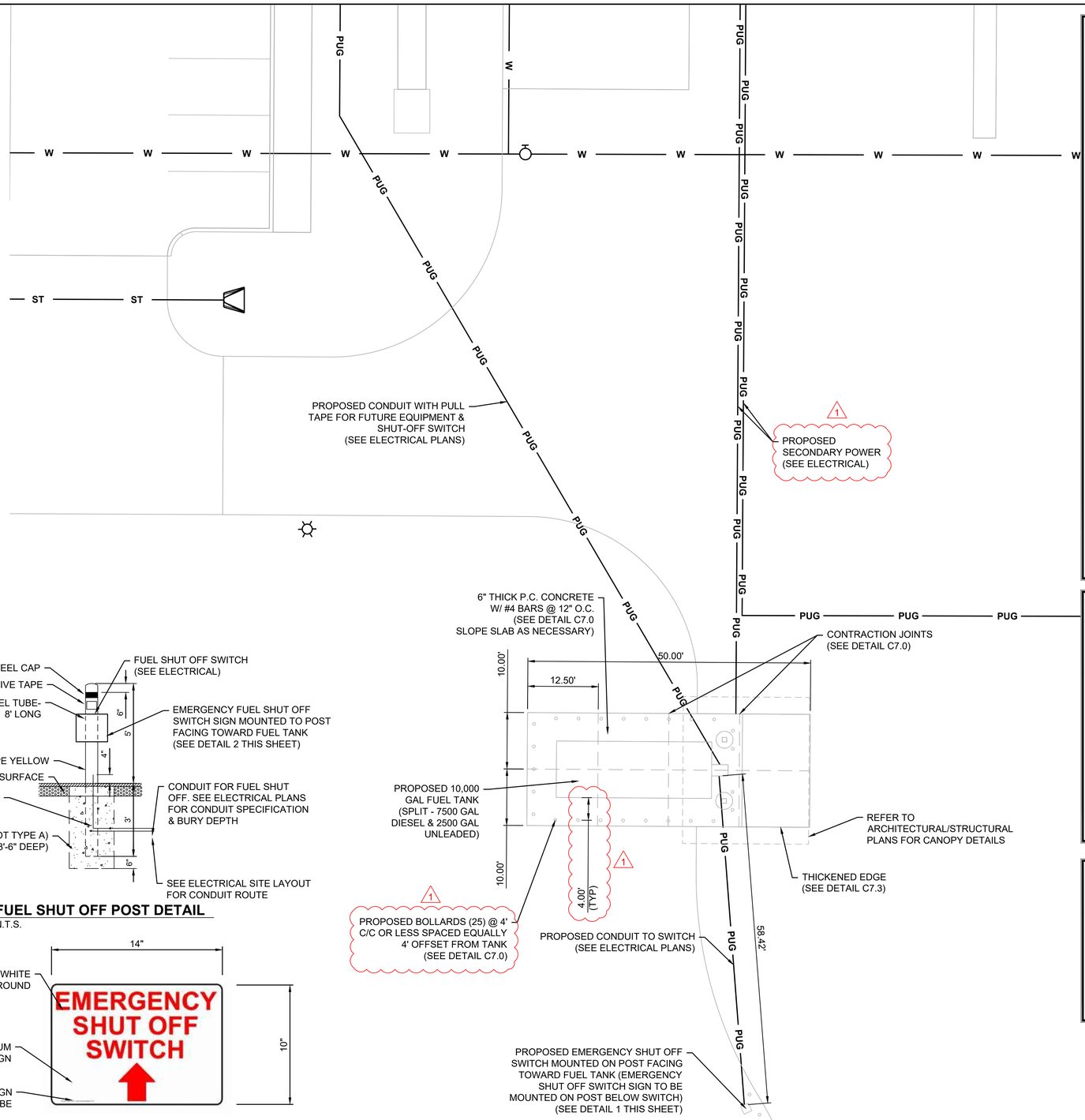

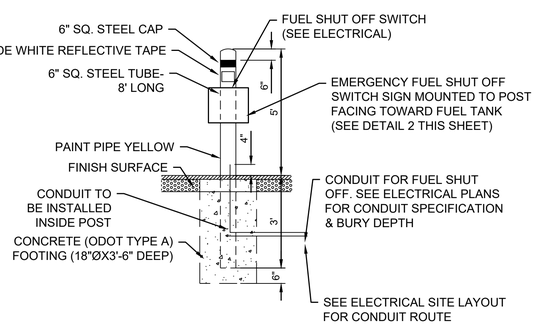

1 FUEL SHUT OFF POST DETAIL
N.T.S.

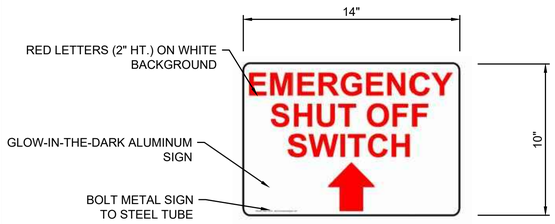

2 EMERGENCY FUEL SHUT OFF SWITCH SIGN DETAIL
N.T.S.

FUELING NOTES:

PETROLEUM EQUIPMENT FOR BECKHAM CO., SAYRE, OK

QTY:	DESCRIPTION:
1	DOUBLE WALL AST ON SKIDS 10,000 GAL (2 COMPARTMENTS)
1	GASBOY 9853KXTW2 DUAL PRODUCT DISPENSER
1	PULSE OPTION (FOR FUTURE USE)
1	RUBBER FOR TANK SKIDS
2	1"X18" HOSES, NOZZLES, SWIVELS, AND BREAKAWAYS
2	OPW 200TG AST MECHANICAL TANK GAUGE
4	4"X2" DT BUSHINGS
2	MORRISON 9095A OVERFILL TUBE
2	OPW SAFETY VALVES
2	MORRISON 922 PRESSURE VACUUM VENT WITH OVERFILL ALARM
2	MORRISON PRESSURE RELIEF VALVE 78DI
2	MORRISON 346DI EXTERNAL VALVE
4	MORRISON 2" BALL VALVE
2	MORRISON 246A 2" SWING CHECK VALVE
1	MORRISON 2" REMOTE SPILL CONTAINER DOUBLE PORT 515
2	MORRISON 800A MALE ADAPTER 2"
2	MORRISON 800DC DUST CAP 2"
2	MORRISON 710 2" SOLENOID VALVE
1	PUMP PEDESTAL W/ BRAVO B-8600-1P SECONDARY CONTAINMENT
1	MISC. 2" BLACK PIPE AND FITTINGS
4	DECAL PLACKARD
2	RED JACKET 3/4 HP SUB PUMP
2	RED JACKET CONTROL BOX
2	517 3 1/2 GALLON AST SPILL CONTAINER
1	OSHA COMPLIANT STAIR AND PLATFORM TO TOP OF TANK

CONTRACTOR TO FURNISH THE FOLLOWING:

ALL ELECTRICAL
ALL BOLLARDS
ANY NECESSARY ROCK
ALL CONCRETE AND INSTALLATION

FUELING SYSTEM NOTES:

1. CONTRACTOR SHALL PROVIDE ALL MATERIAL, EQUIPMENT, AND LABOR NECESSARY TO INSTALL A COMPLETE FUELING SYSTEM.
2. MATERIALS LIST INCLUDES ITEMS NECESSARY FOR INSTALLATION BUT NOT LIMITED TO LIST.
3. ALL FUELING SYSTEM TO MEET OKLAHOMA CORPORATION COMMISSION UST/AST.
4. SYSTEM INSTALLER TO BE UST/AST CERTIFIED INSTALLER.
5. TANKS TO HAVE 3' MINIMUM CLEARANCE.
6. THE CONTRACTOR IS RESPONSIBLE FOR SUPPLYING THE DESIGN OF THE FOUNDATION FOR THE ABOVE GROUND FUEL TANK(S). NO FUEL TANK(S) SHALL BE INSTALLED PRIOR TO STRUCTURAL ENGINEER'S REVIEW OF THE FOUNDATION DRAWINGS. THE FOUNDATION SHALL BE DESIGNED BY A PROFESSIONAL ENGINEER.

NOTE TO CONTRACTOR:

THE CONTRACTOR IS RESPONSIBLE FOR SUPPLYING THE DESIGN & CONSTRUCTION OF THE FOUNDATION FOR THE ABOVE GROUND FUEL TANK(S). THE CONTRACTOR MAY PLACE THE TANK DIRECTLY ON THE CONCRETE SLAB IF PROPER DOCUMENTATION IS PROVIDED FROM A PROFESSIONAL ENGINEER LICENSED IN THE STATE OF OKLAHOMA.

IF A TANK FOUNDATION IS REQUIRED, NO FUEL TANK(S) SHALL BE INSTALLED PRIOR TO STRUCTURAL ENGINEER'S REVIEW OF THE FOUNDATION DRAWINGS. THE TANK FOUNDATION SHALL BE DESIGNED BY A PROFESSIONAL ENGINEER IN THE STATE OF OKLAHOMA. FOUNDATION SHALL BE DESIGNED IN ACCORDANCE WITH GEOTECHNICAL REPORT PROVIDED FOR THIS SITE.

NORTH ARROW
SCALE 1"=10'
0 10' 20'

PLOT DATE: 2/3/2020 12:40 PM

CEC

CEC CORPORATION
4555 W. MEMORIAL ROAD
OKLAHOMA CITY, OKLAHOMA 73142
P: 405.753.4200
WWW.CORPECTEC.COM

STATE OF OKLAHOMA CERTIFICATE OF AUTHORIZATION
CA 3378 EXPIRES 06/30/2020

COPYRIGHT © 2019 CEC. ALL RIGHTS RESERVED.
THIS DRAWING IS PROPERTY OF CEC. ANY REPRODUCTION OR USE OF THIS DRAWING WITHOUT EXPRESS WRITTEN AUTHORIZATION OF CEC IS PROHIBITED.

LICENSED PROFESSIONAL ENGINEER
AUSTIN C. BURTON
01/30/2020
26508
OKLAHOMA

REVISION HISTORY

NO.	DESCRIPTION	DATE
1	ADDENDUM A	01/30/2020

CONSTRUCTION DOCUMENTS

SUBMITTAL:	CONSTRUCTION DOCUMENTS
DATE:	09/21/2018
PROJECT NO:	180131.0018.06
DESIGNED BY:	ACB
DRAWN BY:	JLP
APPROVED BY:	ACB
SCALE:	AS SHOWN

MAINTENANCE FACILITY
DIVISION 05 - BECKHAM COUNTY
OKLAHOMA DEPARTMENT OF TRANSPORTATION
SAYRE, OKLAHOMA

SHEET NAME
FUELING PLAN

SHEET
C4.4

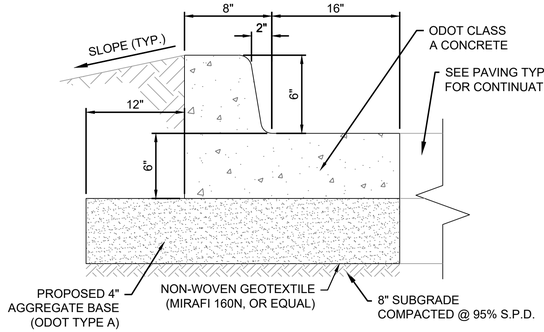

1 CONCRETE CURB DETAIL
NTS

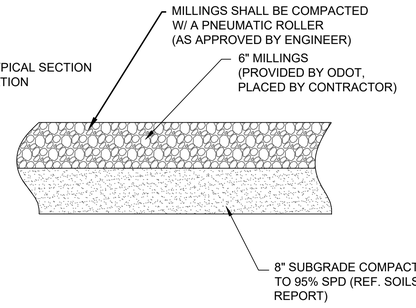

2 MILLINGS DETAIL
NTS

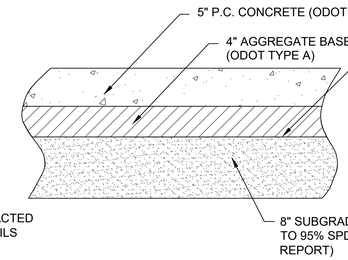

3 LIGHT-DUTY CONCRETE DETAIL
NTS

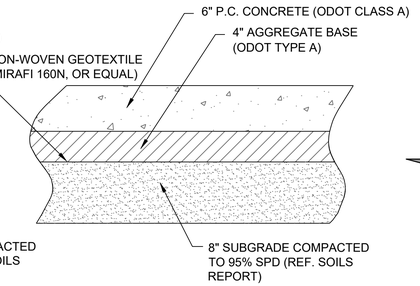

4 HEAVY-DUTY CONCRETE DETAIL
NTS

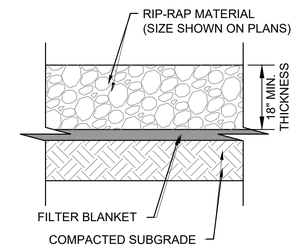

5 RIP-RAP DETAIL
NTS

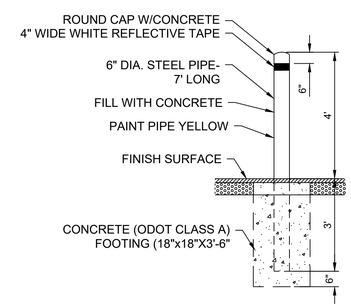

6 STANDARD BOLLARD DETAIL 'TYPE 1'
NTS

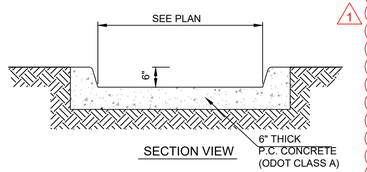

GENERAL NOTES

1. MAXIMUM SPACING OF 3/4" EXPANSION JOINTS TO BE 100' C/C WITH CONTRACTION JOINTS 12' APART.

7 CONCRETE FLUME DETAIL
NTS

1

NOTE:

SEE SHEET C7.6 FOR ADDITIONAL FLEXAMAT DETAILS.

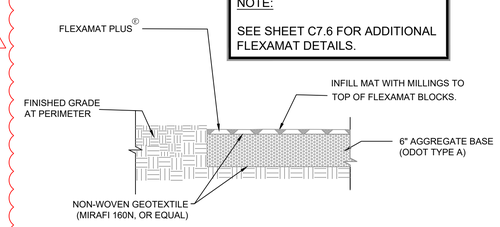

8 FLEXAMAT IN MILLINGS DETAIL
N.T.S.

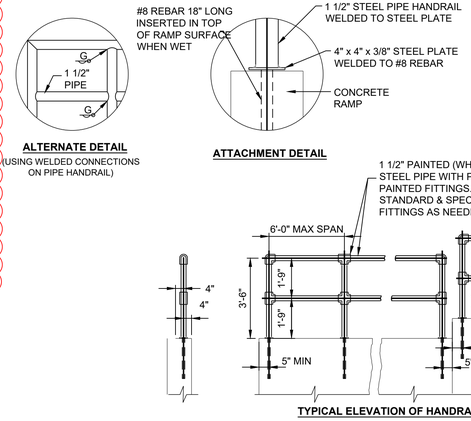

HANDRAIL NOTES:

1. PIPE HANDRAIL SHALL BE PLACED ON RAMPS ONLY WHEN CALLED FOR ON THE PLANS.

2. WELDED CONNECTIONS MAY BE USED FOR PIPE HANDRAILS. WELDED CONNECTIONS SHALL BE THOROUGHLY CLEANED OF ALL LOOSE SCALE, GROUND SMOOTH AND SPOT PAINTED WITH TWO COATS OF ALUMINUM PAINT.

9 HANDRAIL DETAIL
NTS

1

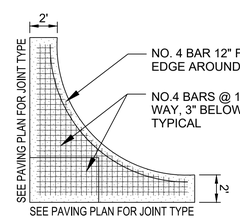

FILLET DETAIL TYPICAL STEEL PLAN FOR REINFORCED SLABS

10 FILLET DETAIL
NTS

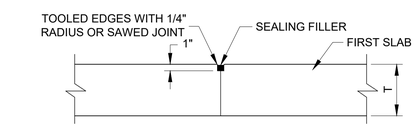

CONSTRUCTION JOINT

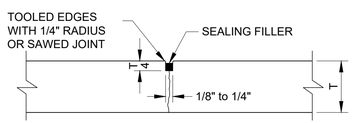

CONTRACTION JOINT

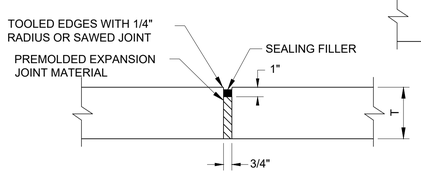

EXPANSION JOINT

JOINT LAYOUT NOTES:

1. CONTRACTOR SHALL SUBMIT JOINT LAYOUT AND POUR SCHEDULE FOR APPROVAL.
2. MAXIMUM JOINT SPACING SHALL NOT EXCEED 12.5' X 12.5'
3. MINIMUM LENGTH OF CONCRETE SHALL BE 2' (NO SINGLE POINTS)
4. PANEL DIMENSIONS RATIO SHALL BE LESS THAN 1.25:1 ALL ODD– SHAPED PANELS SHALL HAVE REINFORCING AS SHOWN IN FILLET DETAIL (THIS SHEET)

11 JOINT DETAILS - NO DOWELS
NTS

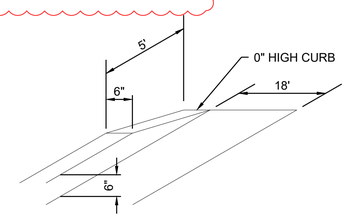

12 CURB TRANSITION 6" TO 0"
NTS

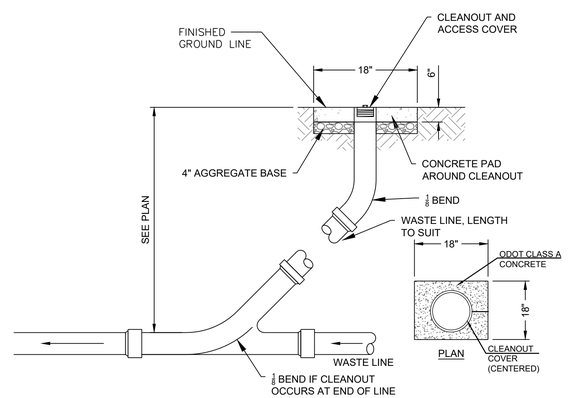

13 STORM SEWER CLEANOUT
NTS

PLOT DATE: 2/3/2020 12:40 PM

CEC

CEC CORPORATION
4555 W. MEMORIAL ROAD
OKLAHOMA CITY, OKLAHOMA 73142
P: 405.753.4200
WWW.CORPCTEC.COM

STATE OF OKLAHOMA CERTIFICATE OF AUTHORIZATION NO. 2000-0001 EXP. 06/30/2021

COPYRIGHT © 2019 CEC. ALL RIGHTS RESERVED.
THIS DRAWING IS PROPERTY OF CEC. ANY REPRODUCTION OR USE OF THIS DRAWING IS NOT AUTHORIZED WITHOUT EXPRESS WRITTEN AUTHORIZATION OF CEC'S PROPERTY.

LICENSED PROFESSIONAL ENGINEER
AUSTIN C. BURTON
01/30/2020
26508
OKLAHOMA

REVISION HISTORY

NO.	DESCRIPTION	DATE
1	ADDENDUM A	01/30/2020

SUBMITTAL: CONSTRUCTION DOCUMENTS
DATE: 09/21/2018
PROJECT NO: 190131.0018.06
DESIGNED BY: ACB
DRAWN BY: JLP
APPROVED BY: ACB
SCALE: AS SHOWN

MAINTENANCE FACILITY
DIVISION 05 - BECKHAM COUNTY
OKLAHOMA DEPARTMENT OF TRANSPORTATION
SAYRE, OKLAHOMA

SHEET NAME
DETAILS

SHEET
C7.0

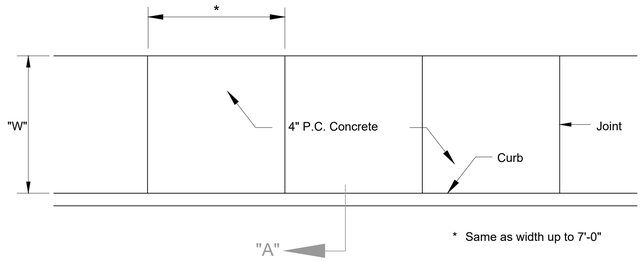

PLAN

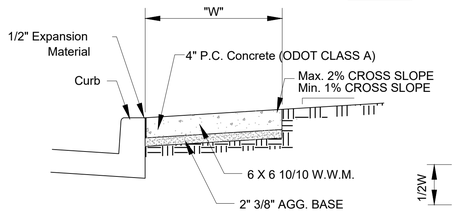

SECTION "A - A"

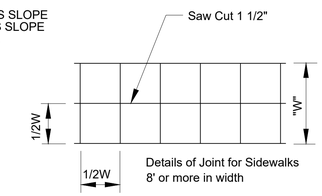

Details of Joint for Sidewalks 8' or more in width

NOTES:

1. 1/2" x 4" premoulded expansion material around structures in walk.
2. Expansion Joints maximum distance = 100', use 1/2" x 4" premoulded expansion material.
3. Contraction Joints maximum distance = 7', saw cut 1-1/2" deep and fill with hot poured sealer.
4. Saw cut joints within 24 hours.
5. Use 1/2" x 4" premoulded expansion joint at curb.
6. "W" = 60" MINIMUM-SEE PLAN

1 SIDEWALK DETAIL

NTS

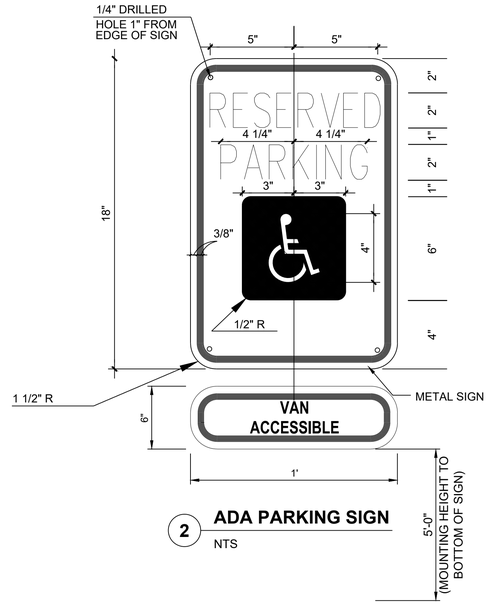

2 ADA PARKING SIGN

NTS

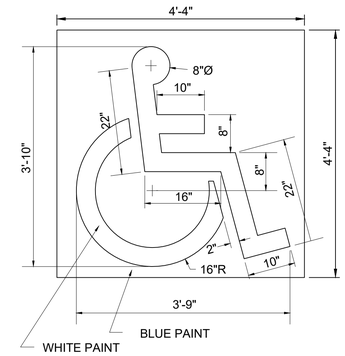

3 ADA PAVEMENT MARKING

N.T.S.

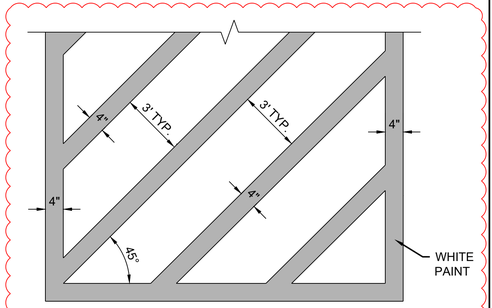

4 ADA GORE STRIPING DETAIL

N.T.S.

1

1

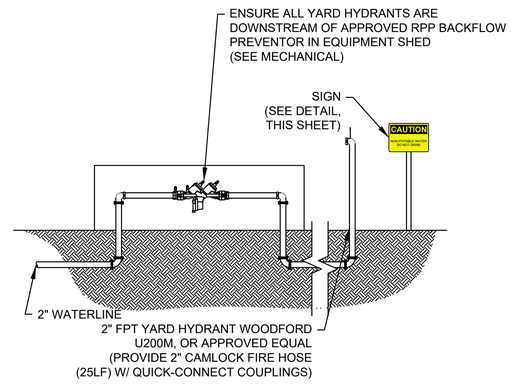

6 FILL HYDRANT DETAIL

SCALE = NTS

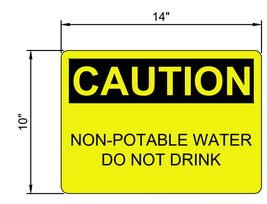

7 NON-POTABLE WATER SIGN DETAIL

SCALE = NTS

NOTE:

1. PROVIDE 1 SIGN AT EACH YARD HYDRANT LOCATION.

1

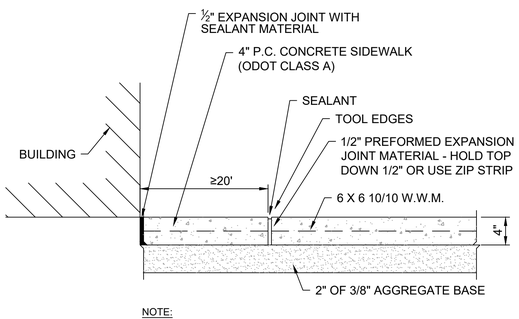

NOTE:
LOCATE EXPANSION JOINTS 20' O.C. FOR WALKS EXTENDING MORE THAN 20' FROM BUILDING.

5 SIDEWALK EXPANSION JOINT

N.T.S.

CEC

CEC CORPORATION
4555 W. MEMORIAL ROAD
OKLAHOMA CITY, OKLAHOMA 73142
P: 405.753.4200
WWW.CORPCTEC.COM

STATE OF OKLAHOMA CERTIFICATE OF AUTHORIZATION CA 3E EXPIRES 06/30/2020

COPYRIGHT © 2019 CEC. ALL RIGHTS RESERVED.
THIS DRAWING IS PROPERTY OF CEC. ANY REPRODUCTION OR USE OF THIS DRAWING WITHOUT EXPRESS WRITTEN AUTHORIZATION OF CEC IS PROHIBITED.

LICENSED PROFESSIONAL ENGINEER
AUSTIN C. BURTON
01/30/2020
26508
OKLAHOMA

REVISION HISTORY

NO.	DESCRIPTION	DATE
1	ADDENDUM A	01/30/2020

SUBMITTAL: CONSTRUCTION DOCUMENTS

DATE:	09/21/2018
PROJECT NO:	180131.0018.06
DESIGNED BY:	ACB
DRAWN BY:	JLP
APPROVED BY:	ACB
SCALE:	AS SHOWN

MAINTENANCE FACILITY
DIVISION 05 - BECKHAM COUNTY
OKLAHOMA DEPARTMENT OF TRANSPORTATION
SAYRE, OKLAHOMA

SHEET NAME
DETAILS

SHEET
C7.1

PLOT DATE: 2/3/2020 12:40 PM

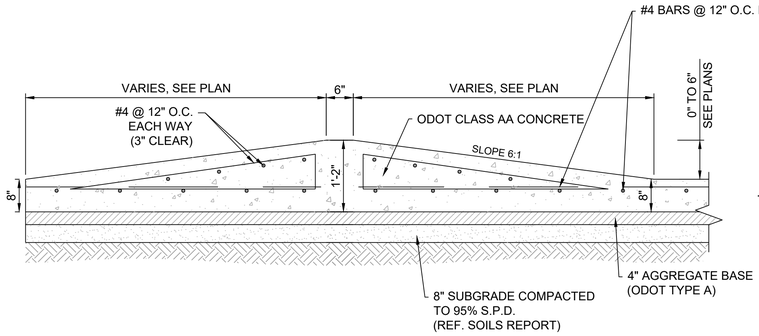

1 SALT/SAND MIX PAD CROSS SECTION

NTS

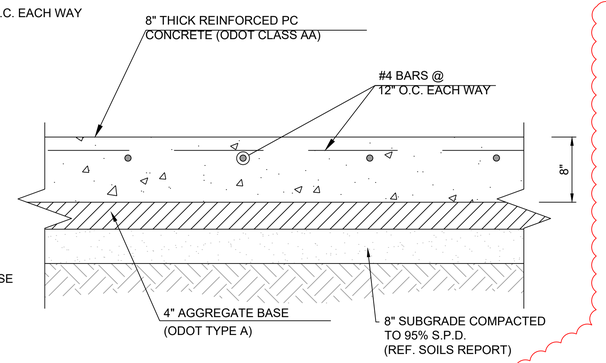

2 SALT/SAND MIX PAD DETAIL

NTS

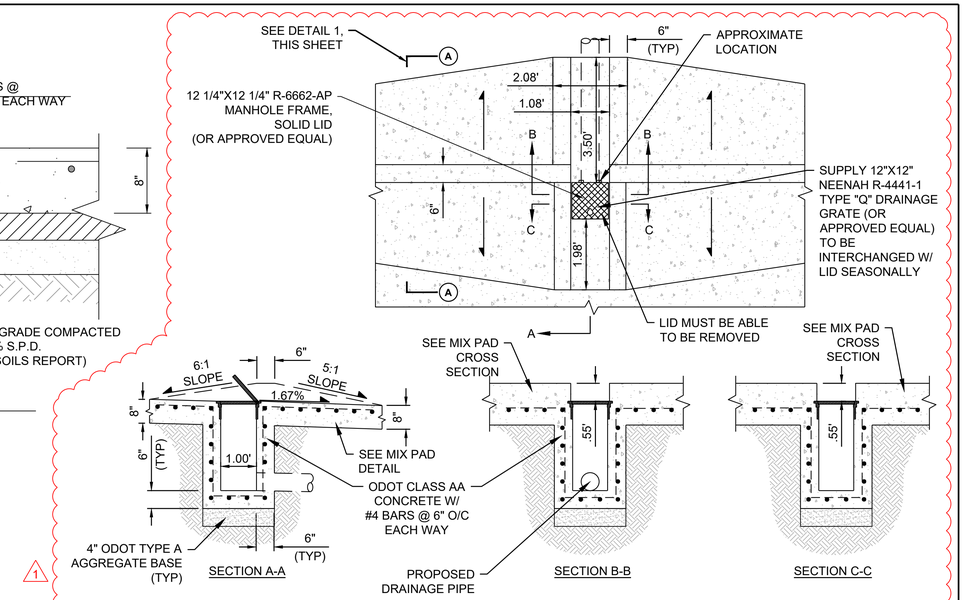

3 AREA INLET DETAIL (MIX PAD)

NTS

NYLOPLAST DRAIN BASIN WITH SOLID COVER

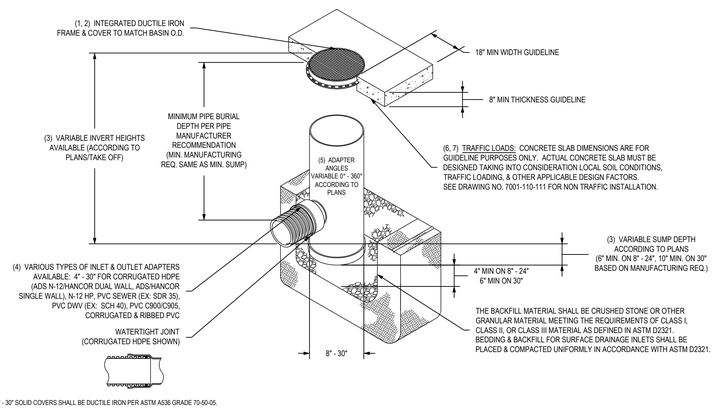

1 - 8" - 30" SOLID COVERS SHALL BE DUCTILE IRON PER ASTM A536 GRADE 70-50-05.
2 - 12" - 30" FRAMES SHALL BE DUCTILE IRON PER ASTM A536 GRADE 70-50-05. 8" & 10" SOLID COVERS FIT DIRECTLY ONTO DRAIN BASINS WITH THE USE OF A PVC BODY TOP. SEE DRAWING NO. 7001-110-045.
3 - DRAIN BASIN TO BE CUSTOM MANUFACTURED ACCORDING TO PLAN DETAILS. RISERS ARE NEEDED FOR BASINS OVER 84" DUE TO SHIPPING RESTRICTIONS. SEE DRAWING NO. 7001-110-065.
4 - DRAINAGE CONNECTION STUB JOINT TIGHTNESS SHALL CONFORM TO ASTM D3212 FOR CORRUGATED HDPE (ADS N-12/HANCOR DUAL WALL), N-12 HP, & PVC SEWER (4" - 24").
5 - ADAPTERS CAN BE MOUNTED ON ANY ANGLE 0° TO 360°. TO DETERMINE MINIMUM ANGLE BETWEEN ADAPTERS SEE DRAWING NO. 7001-110-012.
6 - 12" - 30" SOLID COVERS SHALL MEET H-20 LOAD RATING.
7 - 8" & 10" SOLID COVERS ARE RATED FOR LIGHT DUTY APPLICATIONS ONLY; NO CONCRETE COLLAR NEEDED FOR LIGHT DUTY RATING.

4 NYLOPLAST DRAIN BASIN WITH SOLID COVER

NTS

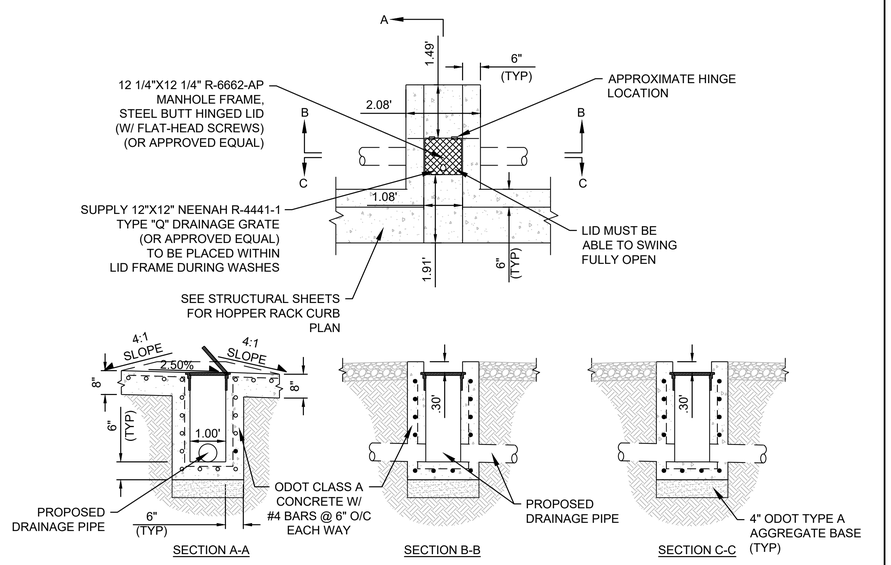

5 AREA INLET DETAIL (HOPPERS)

NTS

PLOT DATE: 2/3/2020 12:40 PM

CEC

CEC CORPORATION
4555 W. MEMORIAL ROAD
OKLAHOMA CITY, OKLAHOMA 73142
P: 405.755.4200
WWW.CORPCTCEC.COM

STATE OF OK CERTIFICATE OF AUTHORIZATION CA 1459 EXPIRES JUNE 30, 2020

COPYRIGHT © 2019 CEC. ALL RIGHTS RESERVED. THIS DRAWING IS PROPERTY OF CEC. ANY REPRODUCTION OR USE OF THIS DRAWING WITHOUT EXPRESS WRITTEN AUTHORIZATION OF CEC IS PROHIBITED.

LICENSED PROFESSIONAL ENGINEER
AUSTIN C. BURTON
01/30/2020
26508
OKLAHOMA

REVISION HISTORY

NO.	DESCRIPTION	DATE
1	ADDENDUM A	01/30/2020

SUBMITTAL: CONSTRUCTION DOCUMENTS
DATE: 09/21/2018
PROJECT NO: 180131.0018.06
DESIGNED BY: ACB
DRAWN BY: JLP
APPROVED BY: ACB
SCALE: AS SHOWN

MAINTENANCE FACILITY

DIVISION 05 - BECKHAM COUNTY
OKLAHOMA DEPARTMENT OF TRANSPORTATION
SAYRE, OKLAHOMA

SHEET NAME
DETAILS

SHEET
C7.2

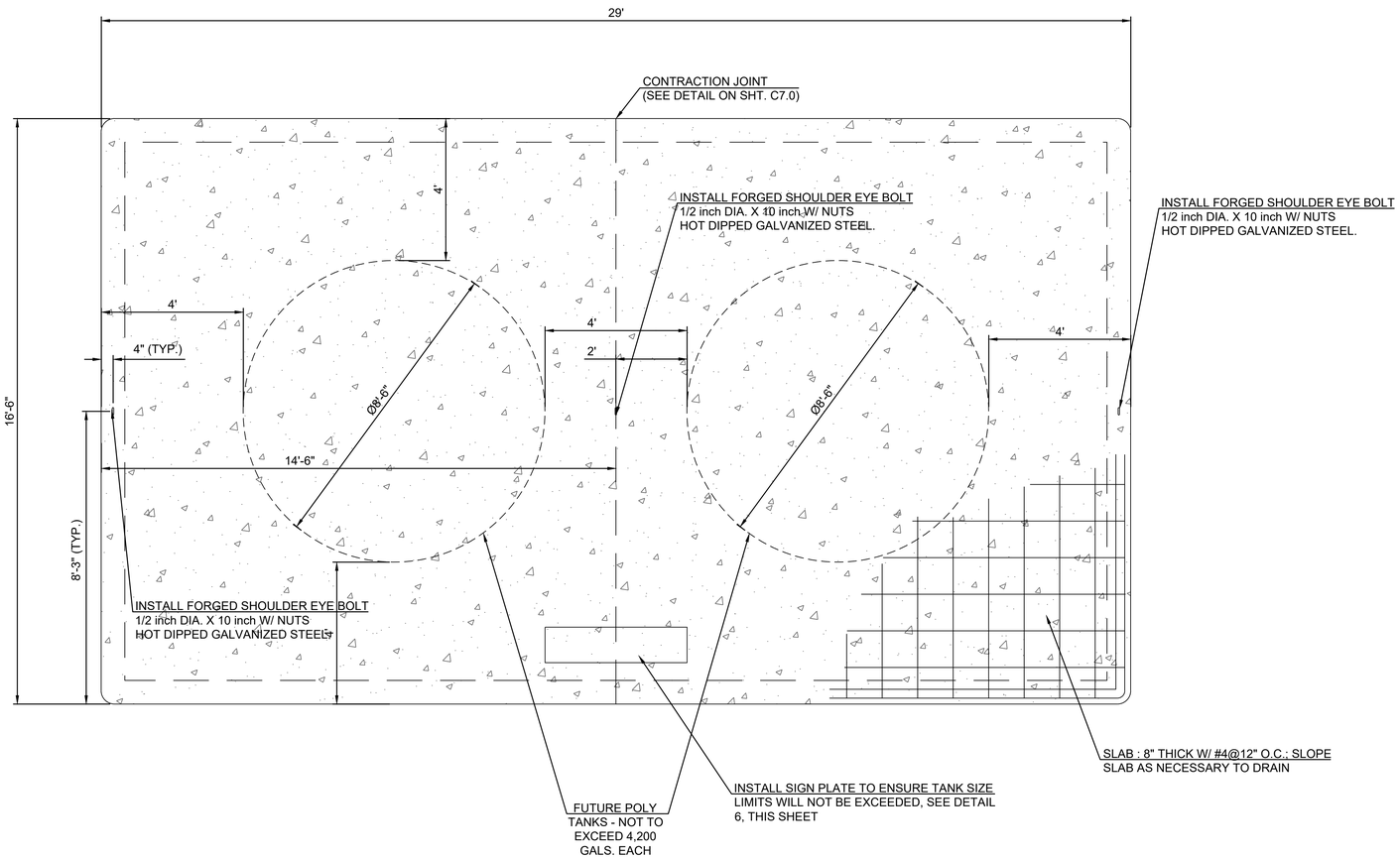

1 CONCRETE SLAB DETAIL
NTS

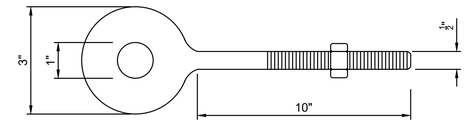

4 FORGED SHOULDER EYE BOLT DETAIL
NTS

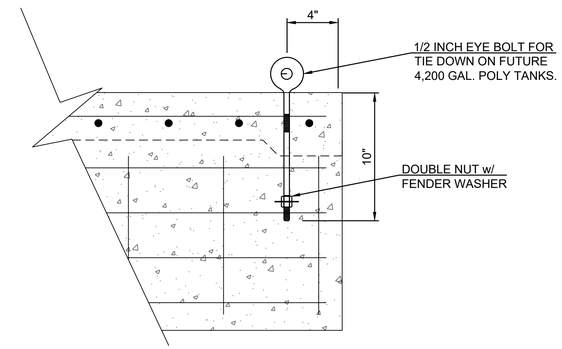

5 EYE BOLT SECTION DETAIL
NTS

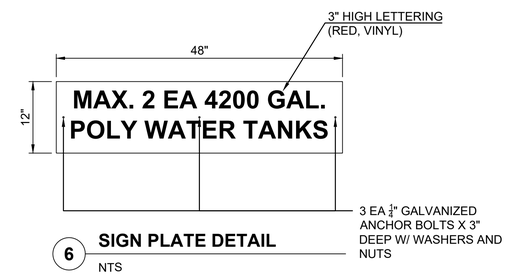

6 SIGN PLATE DETAIL
NTS

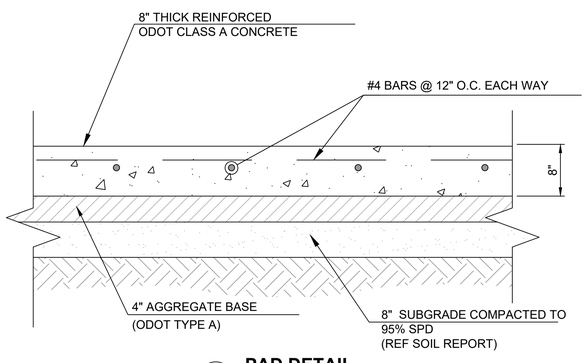

2 PAD DETAIL
NTS

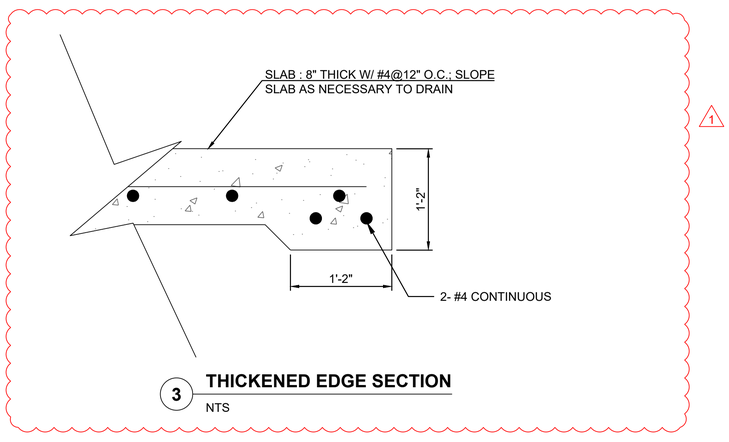

3 THICKENED EDGE SECTION
NTS

PLOT DATE: 2/3/2020 12:40 PM

CEC

CEC CORPORATION
4555 W. MEMORIAL ROAD
OKLAHOMA CITY, OKLAHOMA 73142
P: 405.755.4200
WWW.CORPCTEC.COM
STATE OF OKLAHOMA CERTIFICATE OF AUTHORIZATION
CA 3378 EXPIRES: 06/30/2020

COPYRIGHT © 2019 CEC. ALL RIGHTS RESERVED.
THIS DRAWING IS PROPERTY OF CEC. ANY
REPRODUCTION OR USE OF THIS DRAWING
WITHOUT EXPRESS WRITTEN AUTHORIZATION OF
CEC IS PROHIBITED.

LICENSED PROFESSIONAL ENGINEER
AUSTIN C. BURTON
01/30/2020
26508
OKLAHOMA

REVISION HISTORY

NO.	DESCRIPTION	DATE
1	ADDENDUM A	01/30/2020

SUBMITTAL:	CONSTRUCTION DOCUMENTS
DATE:	09/21/2018
PROJECT NO:	180131.0018.06
DESIGNED BY:	ACB
DRAWN BY:	JLP
APPROVED BY:	ACB
SCALE:	AS SHOWN

MAINTENANCE FACILITY
DIVISION 05 - BECKHAM COUNTY
OKLAHOMA DEPARTMENT OF TRANSPORTATION
SAYRE, OKLAHOMA

SHEET NAME
TANK PAD DETAILS

SHEET
C7.3

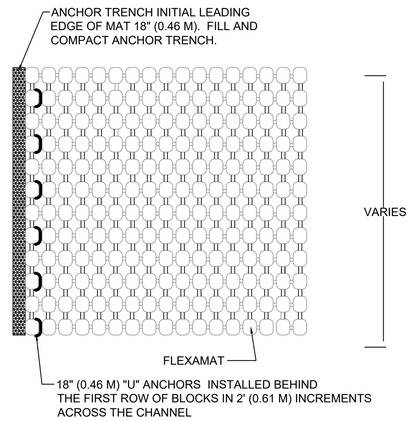

PROFILE VIEW
PERPENDICULAR OVERLAPS

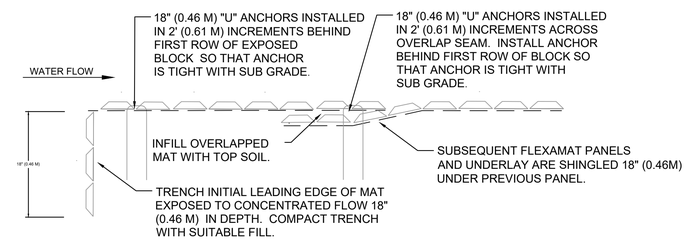

CROSS SECTION VIEW
METHOD FOR TREATING EDGES EXPOSED TO SURFACE SHEET FLOW

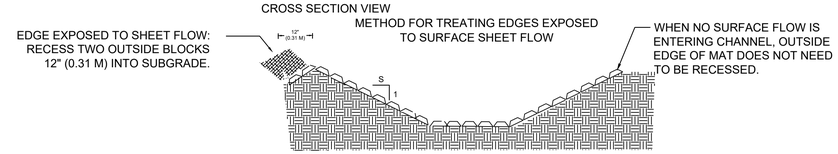

FLEXAMAT INFORMATION

Manufacturer:	Motz Enterprises, Inc.
Product Name:	Flexamat®
Address:	3153 Madison Road Cincinnati, Ohio 45209
Telephone:	513-772-MOTZ (6689)
Fax:	513-772-6690
Email:	Info@Flexamat.com
Website:	www.Flexamat.com

CONSTRUCTION NOTES:

1. GRADE CHANNEL SO THAT WATER WILL FLOW DOWN THE CENTER OF THE CHANNEL AND BE CONTAINED TO THE CHANNEL. ALL SUBGRADE SURFACES PREPARED FOR PLACEMENT OF MATS SHALL BE SMOOTH AND FREE OF ALL ROCKS, STICKS, ROOTS, OTHER PROTRUSIONS, OR DEBRIS OF ANY KIND. THE PREPARED SURFACE SHALL PROVIDE A FIRM UNYIELDING FOUNDATION FOR THE MATS.
2. APPLY SEED DIRECTLY TO THE PREPARED SOIL PRIOR TO FLEXAMAT INSTALLATION. USE SEED PER PROJECT SPECIFICATIONS. REFER TO DETAIL ON C7.0 FOR FLEXAMAT IN MILLINGS AREAS.
3. INSTALL FLEXAMAT ROLLS. AVAILABLE WIDTHS ARE 4', 5.5', 8', 10', 12', & 16' (1.22 M, 1.68 M, 2.44 M, 3.05 M, 3.66 M, 4.88 M) AVAILABLE IN CUSTOM LENGTHS. FOR WIDER WIDTHS, INSTALL MATS ADJACENT TO EACH OTHER. SEE CHANNEL DETAIL WIDER THAN 16' (4.88 M) FOR ADDRESSING LONGITUDINAL SEAMS.
4. AT THE TOP OF THE CHANNEL, THE INITIAL LEADING EDGE OF FLEXAMAT EXPOSED TO CONCENTRATED FLOWS SHALL BE EMBEDDED 18" (0.46 M) VERTICALLY INTO THE SUB GRADE TO SERVE AS AN ANCHOR TRENCH. THE TRENCH SHALL BE FILLED AND COMPACTED WITH SUITABLE FILL.
5. FOR ADDITIONAL SECTIONS OF MAT, OVERLAP THE DOWNSTREAM SECTION 18" (0.46 M)WITH UPSTREAM SECTION OF MAT. PRIOR TO INSTALLING OVERLAP, FLIP UPSTREAM MAT BACK 24" ((0.61 M). EXCAVATE 2.25" (0.057 M)OF SOIL 18" (0.46 M) FROM END OF UPSTREAM MAT. DOWNSTREAM SECTION IS LAID IN THE SHALLOW TRENCH. LIGHTLY SPREAD TOPSOIL OVER INITIAL EDGE. FLIP END OF UPSTREAM MAT OVER THE SOIL COVERED INITIAL LEADING EDGE OF DOWNSTREAM MAT.
6. INSTALL 18" (0.46 M) "U" ANCHORS IN 2' (0.46 M) INCREMENTS ACROSS THE OVERLAP. INSTALL ANCHORS DIRECTLY BEHIND FIRST ROW OF BLOCKS. "U" ANCHORS CONSIST OF #3 REBAR "U" ANCHOR WITH 18" (0.46 M) LEGS.
7. AT THE END OF THE ARMORED CHANNEL, EMBED THE MAT 18" (0.46 M) IN A TERMINATION TRENCH. FILL AND COMPACT TERMINATION TRENCH WITH SUITABLE FILL.

FLEXAMAT® CHANNEL INSTALLATION DETAIL

Flexamat

PLOT DATE:

CEC

CEC CORPORATION
4555 W. MEMORIAL ROAD
OKLAHOMA CITY, OKLAHOMA 73142
P: 405.753.4200
WWW.CORPECTEC.COM

STATE OF OKLAHOMA
CA: 3338 EXPIRES: 06/30/2020

COPYRIGHT © 2019 CEC. ALL RIGHTS RESERVED.
THIS DRAWING IS PROPERTY OF CEC. ANY REPRODUCTION OR USE FOR OTHERS IS PROHIBITED WITHOUT EXPRESS WRITTEN AUTHORIZATION OF CEC IS PROVIDED.

LICENSED PROFESSIONAL ENGINEER
AUSTIN C. BURTON
01/30/2020
26508
OKLAHOMA

REVISION HISTORY

NO.	DESCRIPTION	DATE
1	ADDENDUM A	01/30/2020

SUBMITTAL:	CONSTRUCTION DOCUMENTS
DATE:	09/21/2018
PROJECT NO:	180131.0018.06
DESIGNED BY:	ACB
DRAWN BY:	JLP
APPROVED BY:	ACB
SCALE:	AS SHOWN

MAINTENANCE FACILITY
DIVISION 05 - BECKHAM COUNTY
OKLAHOMA DEPARTMENT OF TRANSPORTATION
SAYRE, OKLAHOMA

SHEET NAME
FLEXAMAT DETAIL

SHEET
1
C7.6

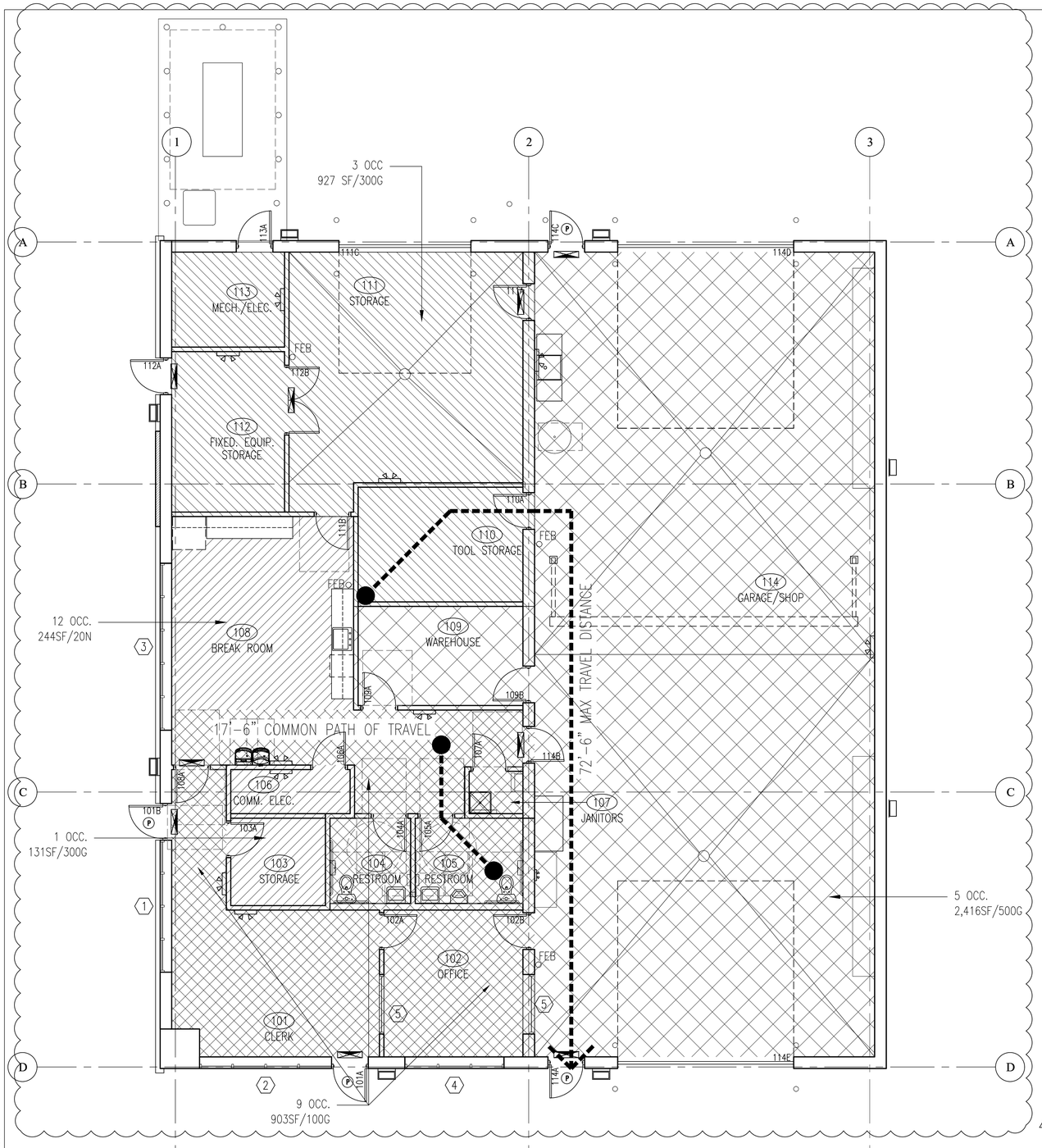

1 CODE PLAN
3/16"=1'-0"

CODE INFORMATION

APPLICABLE CODES:
INTERNATIONAL BUILDING CODE 2015
INTERNATIONAL EXISTING BUILDING CODE 2015
INTERNATIONAL FIRE CODE 2015
INTERNATIONAL FUEL GAS CODE 2015
INTERNATIONAL MECHANICAL CODE 2015
INTERNATIONAL PLUMBING CODE 2015
NATIONAL ELECTRICAL CODE 2014
AMERICAN WITH DISABILITIES ACT 2010

OCCUPANCY TYPE: 304, 311
S-1/B

SPECIAL USE AND OCCUPANCY REQUIREMENTS: 406.8 ; 903.2.9.1
MOTOR VEHICLE RELATED OCCUPANCY– SQUARE FOOTAGE LESS THAN 5,000 S.F. TO MEET MAX FIRE AREA REQUIREMENTS.

TOTAL SQUARE FOOTAGE:
NEW: S-1 3,583 S.F.; B 1,384 S.F.
ACTUAL AND ALLOWABLE BUILDING HEIGHTS AND AREAS: 504.4
S-1 1 STORIES; 28'-11" HEIGHT; 3,583 S.F. ACTUAL
B 1 STORY; 14'6" HEIGHT; 1,384 S.F. ACTUAL
S-1 2 STORIES; 55 FT. HEIGHT; 17,500 S.F. ALLOWABLE
B 3 STORIES; 55 FT.; 23,000 S.F.

FRONTAGE INCREASE: 506
N/A

FIRE SPRINKLER INCREASE: 506
N/A

UNLIMITED BUILDING AREA:
N/A

CONSTRUCTION TYPE: 602.2
II–B

FIRE RESISTANCE RATING REQUIREMENTS: 601
0 HR.

INTERIOR FINISHES: 803.11
B CLASS B
S-1 CLASS C

OCCUPANT LOAD: 1004.1.2
S-1 8 OCC.
B 22 OCC.

	USE	FLOOR AREA	FLOOR AREA PER OCCUPANT	OCCUPANT LOAD
AREA 1:	BUSINESS AREAS	903	100 GROSS	9
AREA 2:	ACCESSORY STORAGE AREAS, MECHANICAL, EQUIPMENT ROOM	1058	300 GROSS	4
AREA 3:	WAREHOUSES	2416	500 GROSS	5
AREA 3:	TRAINING (BREAK ROOM)	244	20 NET	12
	TOTAL OCCUPANT LOAD			30
	NO. OF EXITS REQUIRED, TABLE 1005 & 1006			1

TRAVEL DISTANCE: 1017.2
S-1/B 72 FEET 6 INCHES MAX

COMMON PATH OF TRAVEL: 1016.2.1
S-1/B 51 FEET 3 INCHES MAX

CORRIDOR RATINGS: 1020.1
0 HR.

ACCESSIBILITY:

ROOF ASSEMBLY CONSTRUCTION AND RATING: 601
0 HR.

PLUMBING FIXTURE COUNT: 2902.1
S-1 = 8 OCC.
B = 22 OCC.

USE GROUP	NO. OF OCCUPANTS	WATER CLOSETS			LAVATORIES			BATH OR SHOWER	DRINKING FOUNTAIN	SERVICE SINK
S-1	8	MALE	FEMALE	FAMILY	MALE	FEMALE	FAMILY	TOTAL	TOTAL	TOTAL
REQUIRED:	1/100	.04	.04	0	.04	.04	0	0	.008	1

GROUP USE	OCCUPANTS NO. OF	CLOSETS WATER			LAVATORIES			SHOWER BATH OR	FOUNTAIN DRINKING	SINK SERVICE
B	22	MALE	FEMALE	FAMILY	MALE	FEMALE	FAMILY	TOTAL	TOTAL	TOTAL
REQUIRED:	1/25	.88	.88	0	.55	.55	0	0	.22	1

USE GROUP	NO. OF OCCUPANTS	WATER CLOSETS			LAVATORIES			BATH OR SHOWER	DRINKING FOUNTAIN	SERVICE SINK
S-1/B	30	MALE	FEMALE	FAMILY	MALE	FEMALE	FAMILY	TOTAL	TOTAL	TOTAL
REQUIRED:	SUM OF EACH ABOVE	.92	.92	0	.59	.59	0	0	.23	1
PROVIDED:	ROUNDED TO NEAREST WHOLE	1	1	0	1	1	0	0	1	1

ELEVATOR: N/A
DIRECTIVES: N/A
ALTERNATES: N/A
FIRE WALLS, RATINGS, AND, UL DESIGN: N/A
FIRE BARRIERS AND RATINGS: N/A
FIRE PARTITIONS AND RATINGS: N/A
FIRE DOORS, RATINGS, AND UL DESIGN: N/A
OKLAHOMA UBC COMMISSION CHANGES APPLIED: N/A

CODE SUMMARY
BUILDING FUNCTION IS PRIMARILY SHOP SPACE FOR ROUTINE MAINTENANCE AND STORAGE OF ODOT MATERIALS AND EQUIPMENT, WITH ADMINISTRATIVE SUPPORT SPACE.

LEGEND

- BREAK / TRAINING
- ACCESSORY STORAGE AREAS, MECH. EQUIPMENT
- WAREHOUSE
- BUSINESS AREAS
- EXIT LIGHTS (BATTERY BACK-UP)
- EGRESS LIGHTS (BATTERY BACK-UP)
- EXTERIOR LIGHTS (BATTERY BACK-UP)
- (P) EGRESS DOOR WITH PANIC HARDWARE
- FEB FIRE EXTINGUISHER BRACKET

IDENTIFICATION OF PROPERTY

Beckham County, Sayre Oklahoma – South of I-40 & US-283.

ABBREVIATIONS

A.F.F.	ABOVE FINISHED FLOOR
ALUM.	ALUMININUM
BLK.	BLOCK
B.O.M.	BOTTOM OF MASONRY
B.O.S.	BOTTOM OF STEEL
B.O.T.	BOTTOM OF TRUSS
CLNG.	CEILING
CFMF	COLD FORMED METAL FRAMING
CONC.	CONCRETE
C.J.	CONSTRUCTION JOINT
C.M.U.	CONCRETE MASONRY UNIT
CONT.	CONTINUOUS
DET.	DETENTION
E.J.	EXPANSION JOINT
ELEC.	ELECTRICAL
ELEV.	ELEVATION
EXT.	EXTERIOR
F.E.	FIRE EXTINGUISHER
F.E.C.	FIRE EXTINGUISHER CABINET
F.F.	FINISHED FLOOR
F.D.	FLOOR DRAIN
FLR.	FLOOR
GALV.	GALVANIZED
GA.	GAUGE
GYP. BD.	GYPSUM BOARD
M.O.	MASONRY OPENING
MECH.	MECHANICAL
MTL.	METAL
N.T.S.	NOT TO SCALE
O.C.	ON CENTER
O.F.C.I.	OWNER FURNISHED CONTRACTOR INSTALLED
O.F.O.I.	OWNER FURNISHED OWNER INSTALLED
O.H.	OPPOSITE HAND
R.O.	ROUGH OPENING
SCHED.	SCHEDULE
SIM.	SIMILAR
STL.	STEEL
STRUCT.	STRUCTURE
SUSP.	SUSPENDED
THK.	THICK
T.O.C.	TOP OF CONCRETE
T.O.M.	TOP OF MASONRY
T.O.P.	TOP OF PARAPET
T.O.S.	TOP OF STEEL
TYP.	TYPICAL
W/	WITH

GENERAL NOTES

1. CONTRACTOR SHALL BE RESPONSIBLE FOR ALL PERMITS, LICENSES AND PAY REQUIRED FEES.
2. IN GENERAL, ALL WORK UNDER THIS CONTRACT INCLUDES FOUNDATIONS, STRUCTURAL WORK AS REQUIRED FOR MASONRY WALLS, FLOOR SLABS, INTERIOR PARTITIONS, INTERIOR FINISHES, WALL SECTIONS, MECHANICAL, ELECTRICAL, AND PLUMBING WORK, AS SPECIFIED ON THE DRAWINGS.
3. PRIOR TO COMMENCEMENT OF WORK, THE CONTRACTOR SHALL CONTACT ALL UTILITY COMPANIES HAVING JURISDICTION TO VERIFY LOCATION OF ALL EXISTING LINES AND ANY OTHER FEATURES UNIQUE TO THIS PROJECT.
4. DIMENSIONS: ALL PLAN DIMENSIONS ARE FROM FACE OF FINISH TO FACE OF FINISH/PLYWOOD OR FACE OF FINISH TO FACE OF MASONRY, UNLESS NOTED OTHERWISE.
5. NO EXPOSED STUDS WILL BE PERMITTED IN ACCESSIBLE AREAS REGARDLESS OF LOCATION.
6. ALL WOOD BLOCKING IN THE BUILDING SHALL BE FIRE TREATED LUMBER.
7. ALL GYPSUM BOARD SHALL BE TAPED, BEDDED, AND SANDED AND HAVE NO HOLES. AND VOIDS SEALED, UNLESS NOTED OTHERWISE ON THE DRAWINGS.
8. THERE SHALL BE NO EXPOSED PIPES , CONDUITS, DUCTS, VENTS, ETC. IN OFFICE AREA. ALL SUCH LINES SHALL BE CONCEALED OR FURRED AND FINISHED, UNLESS NOTED OTHERWISE.
9. ALL PENETRATIONS OF PIPES, CONDUITS, DUCTS, VENTS ETC., SHALL BE TIGHTLY SEALED TO PREVENT PASSAGE OF SMOKE AND FIRE COMMENSURATE WITH RATING OF THE PARTITION.
10. MATERIAL OR FINISHES NOTED ON DRAWINGS ARE FOR GENERAL INFORMATION AND TO FACILITATE INTERPRETATION OF THE DRAWINGS. THE CONTRACTOR SHALL FURNISH OTHER MATERIALS, ACCESSORIES AND OR FINISHES AS REQUIRED TO COMPLETE THE WORK.
11. CONTRACTOR SHALL, IN THE WORK OF ALL TRADES, PERFORM ANY AND ALL CUTTING, PATCHING, REPAIRING, RESTORING AND THE LIKE NECESSARY TO COMPLETE THE WORK AND TO RESTORE ANY DAMAGED OR AFFECTED SURFACES RESULTING FROM THE WORK OF THESE CONTRACTS TO THEIR ORIGINAL CONDITION TO THE SATISFACTION OF THE ARCHITECT.
12. ALL MATERIALS AND FINISHES INDICATED ON THE DRAWINGS SHALL BE NEW AND UNUSED.
13. CEILING HEIGHTS NOTED ON DRAWINGS ARE FROM FINISH FLOOR TO CEILING, UNLESS. OTHERWISE NOTED.
14. FOR SIZE AND LOCATION OF ALL OPENINGS FOR MECHANICAL DUCTWORK SEE MECHANICAL DRAWINGS.
15. WHERE FACTORY FINISHED OR FACTORY PRIMED ITEMS, SUCH AS GRILLES, DIFFUSERS, METAL TRIM, LOUVERS AND ACCESSORIES OCCUR, THEY SHALL BE PAINTED TO MATCH ADJACENT SURFACE OR AS DIRECTED BY THE ARCHITECT.
16. CONTRACTOR SHALL VERIFY AT THE JOBSITE, ALL EXISTING CONDITIONS AND DIMENSIONS WHICH MAY AFFECT THE WORK PRIOR TO STARTING OF THE WORK AND NOTIFY THE OWNER AND ARCHITECT OF ANY DISCREPENCIES IMMEDIATELY UPON DISCOVERY.
17. PROVIDE BLOCKING BEHIND ALL SIGNS, FIXTURES, PARTITIONS, ACCESSORIES, ETC., AND WHERE INDICATED OR REQUIRED TO INSURE PROPER AND SECURE INSTALLATION OF SUCH ITEMS.

CEC
Infrastructure solutions

CEC CORPORATION
4555 W. MEMORIAL ROAD
OKLAHOMA CITY, OKLAHOMA 73142
P: 405.733.4200
WWW.CONNECTCEC.COM
STATE OF OK CERTIFICATE OF AUTHORIZATION
CA 2433 EXP. DATE 06/30/2020

COPYRIGHT © 2019 CEC. ALL RIGHTS RESERVED.
THIS DRAWING IS PROPERTY OF CEC. ANY REPRODUCTION OR USE OF THIS DRAWING WITHOUT EXPRESS WRITTEN AUTHORIZATION OF CEC IS PROHIBITED.

STATE OF OKLAHOMA
JOSHUA S. HILL
21663
LICENSED ARCHITECT
1/30/20

REVISION HISTORY

NO.	DESCRIPTION	DATE
1	ADDENDUM A	01/30/2020

SUBMITTAL:	CONSTRUCTION DOCUMENTS
DATE:	09/21/2018
PROJECT NO:	–
DESIGNED BY:	KO
DRAWN BY:	KO
APPROVED BY:	JH
SCALE:	AS SHOWN

MAINTENANCE FACILITY

DIVISION 05 - BECKHAM COUNTY
OKLAHOMA DEPARTMENT OF TRANSPORTATION
SAYRE, OKLAHOMA

SHEET NAME
CODE ANALYSIS PLAN

SHEET
G1.0

PLOT DATE: 1/24/2020 8:40 AM

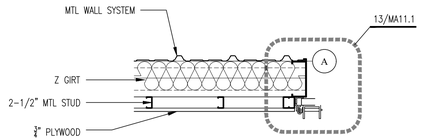

3 PLAN DETAIL
3/4"=1'-0"

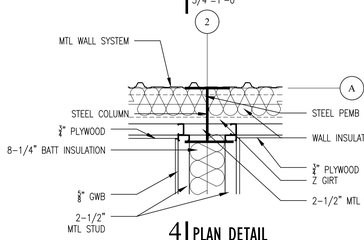

4 PLAN DETAIL
3/4"=1'-0"

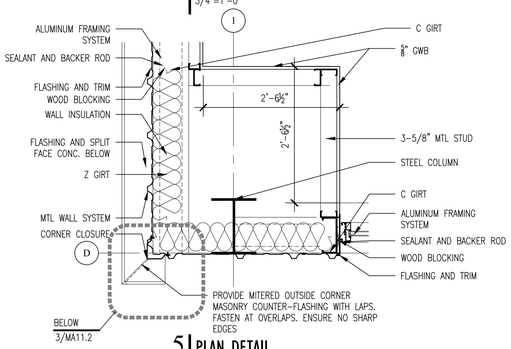

5 PLAN DETAIL
3/4"=1'-0"

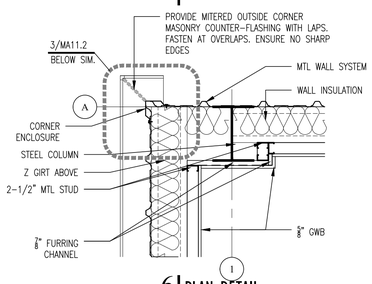

6 PLAN DETAIL
3/4"=1'-0"

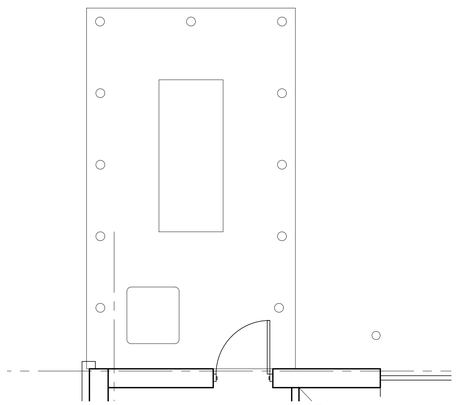

2 ENLARGED FLOOR PLAN
1/4"=1'-0"

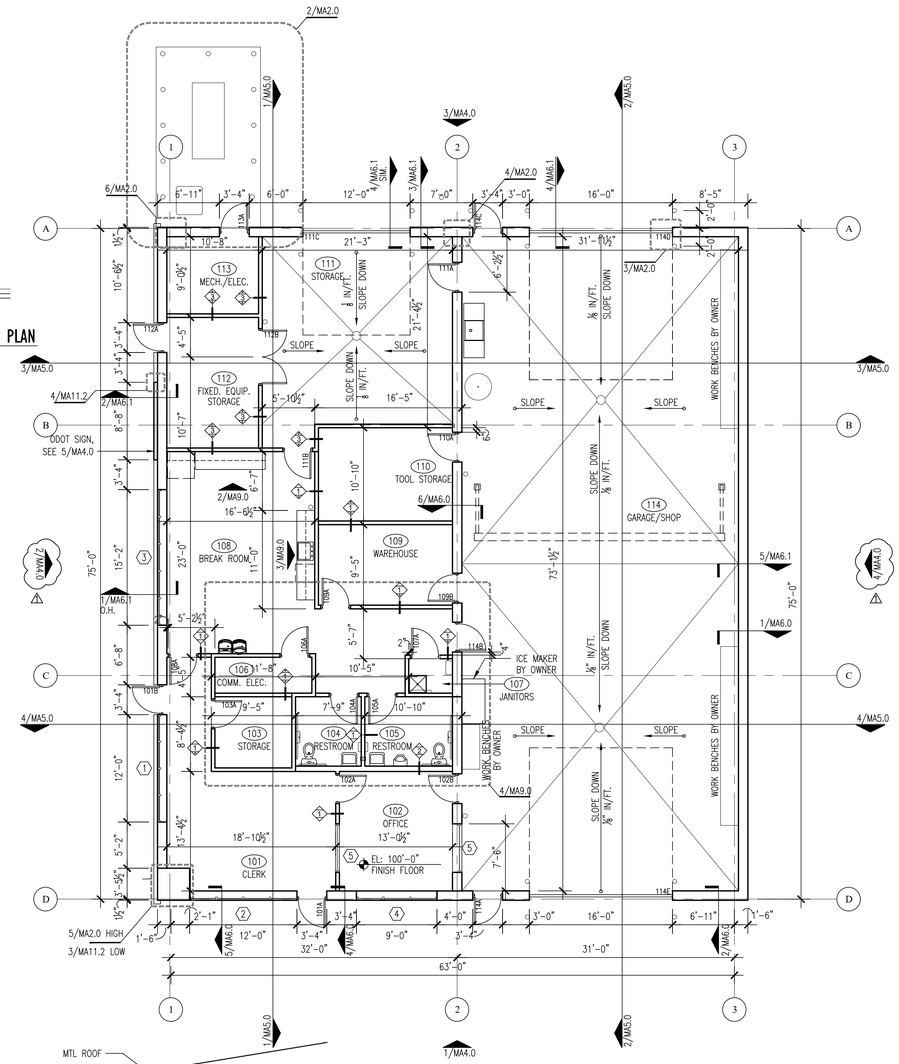

CONTRACTOR TO CONFIRM TRUE NORTH WITH CIVIL SITE PLAN

1 FLOOR PLAN
1/8"=1'-0"

GENERAL NOTES

1. ~~REFER TO SHEET MA9.0 FOR ENLARGED FLOOR PLANS.~~
2. REFER TO SHEET MA9.0 & MA10.0 FOR MILLWORK.
3. ALL FLOOR PLAN DIMENSIONS ARE TO THE FACE OF FINISH OR GYP. BD.
4. REFER TO SHEET MA10.0 FOR ROOM FINISH SCHEDULES & FINISH NOTES.
5. REFER TO SHEET MA11.0 FOR DOOR SCHEDULE & GLAZING ELEVATIONS.
6. REFER TO SHEET MA12.0 FOR REFLECTED CEILING PLAN.
7. SEE FLOOR PLAN FOR PARTITIONS MARKED WITH A NUMERIC LINE SYMBOL DENOTING WALL CONDITION ABOVE THE CEILING.

SYMBOLS LEGEND

- FIRE EXTINGUISHER BRACKET MOUNTED
- GLAZING ELEVATION
- 100A DOOR NUMBER

General Partition Notes

1. ALL PARTITIONS SHALL BE TYPE 1 AND EXTEND TO STRUCTURE UNLESS NOTED OTHERWISE (UNO).
2. STUDS AND FURRING STRIPS SHALL BE SPACED A MAXIMUM OF 16" O.C.
3. STUD SPACING OF PARTITION WALLS EXTENDING TO DECK TO BE 12" O.C. BASED ON MANUFACTURER'S RECOMMENDATIONS.
4. STUD SIZES SHALL CONFORM TO THE SIZES RECOMMENDED BY THE STUD MANUFACTURER FOR THE PARTITION HEIGHT AT EACH LOCATION.
5. PROVIDE DEFLECTION TRACK AT ALL PARTITIONS THAT EXTEND TO STRUCTURE. REFER TO DETAILS A THROUGH D ON SHEET MA2.0
6. ALL PARTITIONS WITH SOUND-ATTENUATION BLANKETS ARE TO BE CONSIDERED ACOUSTICAL PARTITIONS. SEAL TOP AND BOTTOM AND SEAL ALL PENETRATIONS TO INCLUDE DUCTWORK, PIPING AND CONDUIT.
7. REFER TO SPECIFICATION SECTION 092116 FOR METAL STUD REQUIREMENTS WITHIN PARTITIONS WALLS & FURR OUTS.

Partition Symbols Legend

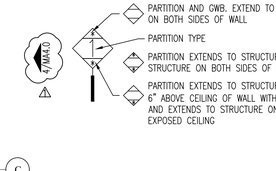

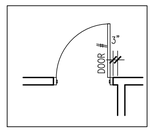

DISTANCE FROM DOOR FRAME TO WALL TO BE 3" AS DEPICTED ABOVE, UNLESS NOTED OTHERWISE ON FLOOR PLAN.

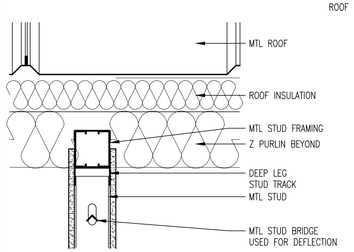

D DEFLECTION TRACK- SECTION
1 1/2" 1'-0"

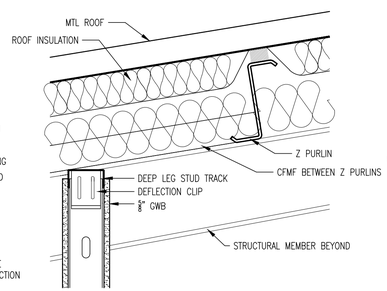

C DEFLECTION CLIP- SECTION
1 1/2" 1'-0"

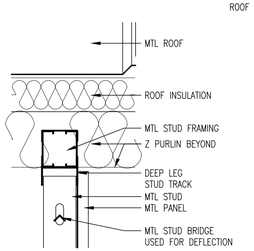

B DEFLECTION TRACK- SECTION
1 1/2" 1'-0"

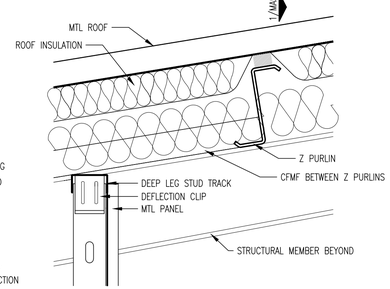

A DEFLECTION CLIPS - SECTION
1 1/2" 1'-0"

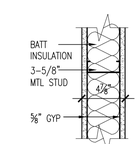

TYPE 3 - PLAN
STUD PARTITION

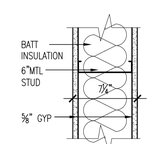

TYPE 2 - PLAN
PLUMBING WALL

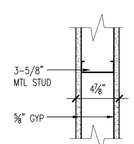

TYPE 1 - PLAN
STUD PARTITION

PLOT DATE: 1/24/2020 8:49 AM

CEC
Infrastructure solutions
CEC CORPORATION
4555 W. MEMORIAL ROAD
OKLAHOMA CITY, OKLAHOMA 73142
P: 405.755.4200
WWW.CONNECTCEC.COM
STATE OF OK CERTIFICATE OF AUTHORIZATION
CA-2456 EXP. JUNE 30, 2020
COPYRIGHT © 2019 CEC. ALL RIGHTS RESERVED.
THIS DRAWING IS PROPERTY OF CEC. ANY REPRODUCTION OR USE OF THIS DRAWING WITHOUT EXPRESS WRITTEN AUTHORIZATION OF CEC IS PROHIBITED.

STATE OF OKLAHOMA
JOSHUA S. HILL
16663
LICENSED ARCHITECT
1/30/20

REVISION HISTORY

NO.	DESCRIPTION	DATE
1	ADDENDUM A	01/30/2020

SUBMITTAL:	CONSTRUCTION DOCUMENTS
DATE:	09/21/2018
PROJECT NO:	--
DESIGNED BY:	KO
DRAWN BY:	KO
APPROVED BY:	JH
SCALE:	AS SHOWN

MAINTENANCE FACILITY
DIVISION 05 - BECKHAM COUNTY
OKLAHOMA DEPARTMENT OF TRANSPORTATION
SAYRE, OKLAHOMA

SHEET NAME
FLOOR PLAN

SHEET
MA2.0

ROOF PLAN NOTES:

1. ROOF TO RECEIVE WHITE FLUROPON COATING ON PANELS.
2. ROOF TO RECEIVE SNOW BARS WITH ICE DAMS PER SPECS.

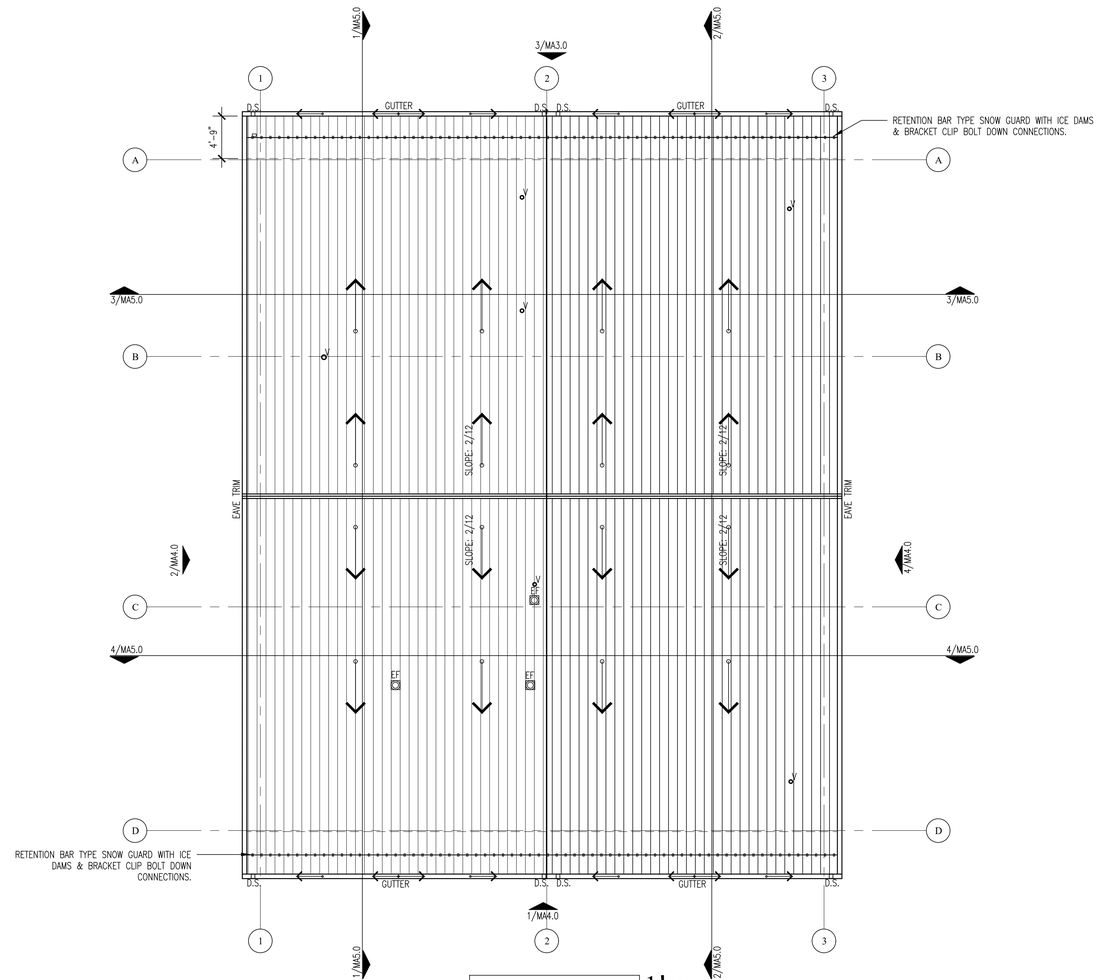

CONTRACTOR TO CONFIRM TRUE NORTH WITH CIVIL SITE PLAN

1 ROOF PLAN
1/8"=1'-0"

ROOF LEGEND

D.S.	DOWNSPOUT
V	ROOF VENT
EF	EXHAUST FAN

CEC
infrastructure solutions

CEC CORPORATION
4555 W. MEMORIAL ROAD
OKLAHOMA CITY, OKLAHOMA 73142
P: 405.753.4200
WWW.CONNECTCEC.COM

STATE OF OK CERTIFICATE OF AUTHORIZATION
CA-2456 EXP. 06/30/2020

COPYRIGHT © 2019 CEC. ALL RIGHTS RESERVED.
THIS DRAWING IS PROPERTY OF CEC. ANY REPRODUCTION OR USE FOR OTHER PURPOSES WITHOUT EXPRESS WRITTEN AUTHORIZATION OF CEC IS PROHIBITED.

STATE OF OKLAHOMA
JOSHUA S. HILL
16663
LICENSED ARCHITECT

1/30/20

REVISION HISTORY

NO.	DESCRIPTION	DATE
1	ADDENDUM A	01/30/2020

SUBMITTAL: CONSTRUCTION DOCUMENTS
DATE: 09/21/2018
PROJECT NO: --
DESIGNED BY: KO
DRAWN BY: KO
APPROVED BY: JH
SCALE: AS SHOWN

MAINTENANCE FACILITY

DIVISION 05 - BECKHAM COUNTY
OKLAHOMA DEPARTMENT OF TRANSPORTATION

SAYRE, OKLAHOMA

SHEET NAME
ROOF PLAN

SHEET
MA3.0

PLOT DATE: 1/24/2020 8:40 AM

ELEVATIONS LEGEND

C.J.	CONTROL JOINT
1	GLAZING TYPE, RE: SHEET MA11.0
101A	DOOR NUMBER, RE: SHEET MA11.0

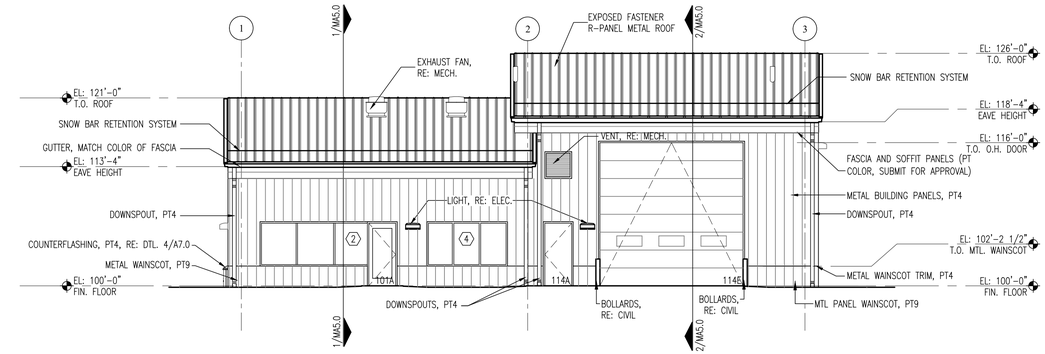

1 EXTERIOR ELEVATION
1/8"=1'-0"

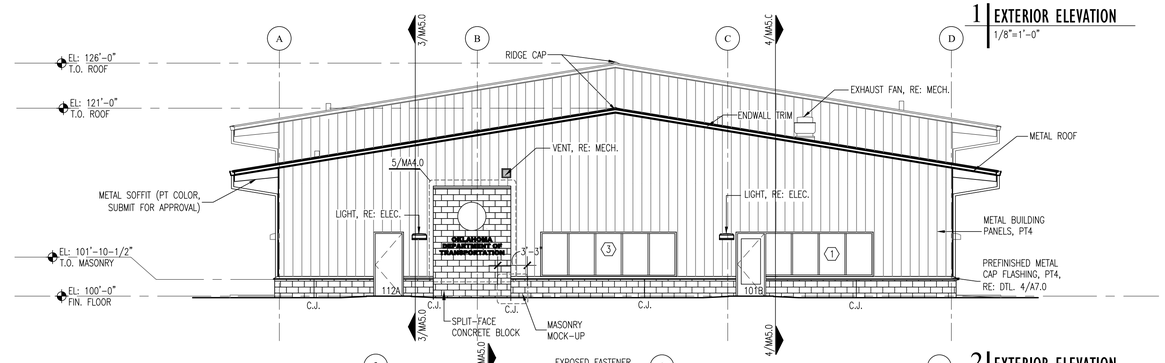

2 EXTERIOR ELEVATION
1/8"=1'-0"

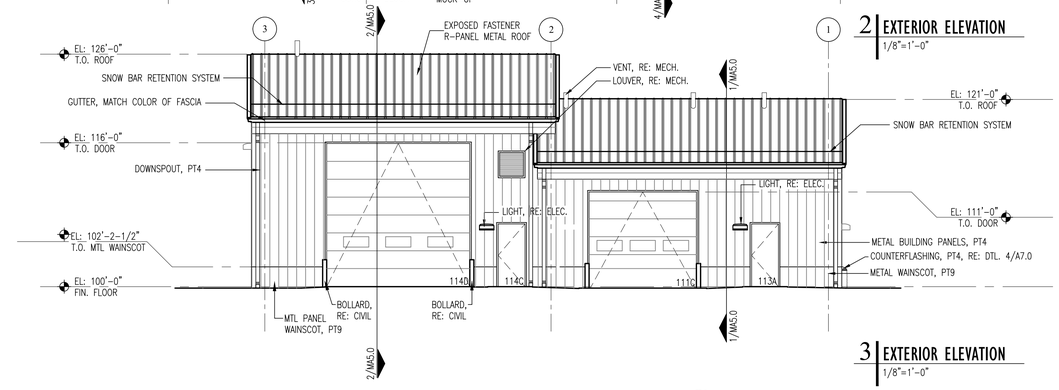

3 EXTERIOR ELEVATION
1/8"=1'-0"

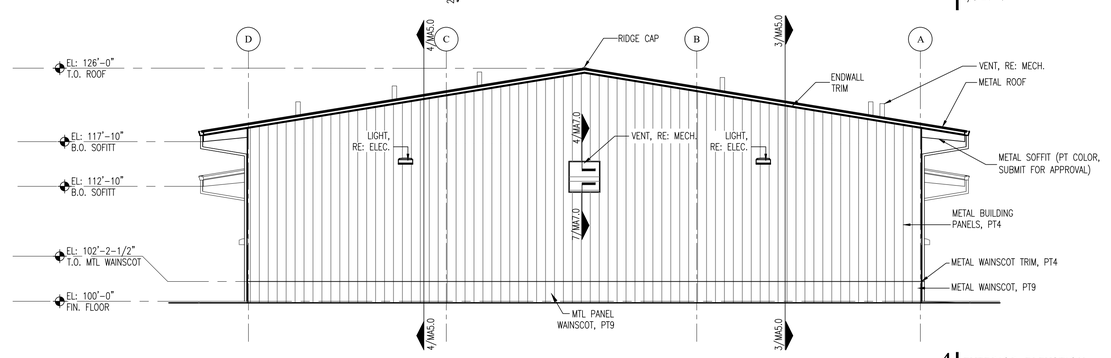

4 EXTERIOR ELEVATION
1/8"=1'-0"

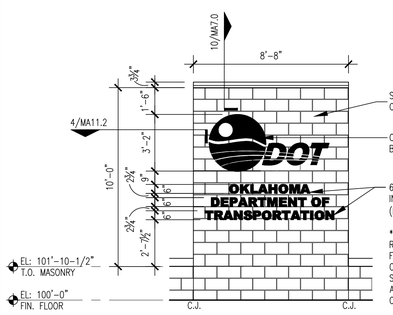

*NOTE INSTALLATION OF LETTERS ON SPLIT FACE BLOCK REQUIRES ANCHORS WITH ADJUSTABLE LEGS IN ORDER FOR LETTERS TO BE INSTALLED IN THE SAME PLANE. CONTRACTOR TO SELECT AN INSTALLATION METHOD WITH SIGNAGE SUPPLIER TO ACCOMMODATE THIS. CONTACT ARCHITECT PRIOR TO INSTALLATION IF FURTHER CLARIFICATION IS NEEDED.

5 ENLARGED ELEVATION
1/4"=1'-0"

NOTE: ALL SIGNAGE COLOR AND FONTS TO BE CONFIRMED AT TIME OF SHOP DRAWINGS.

COORDINATE EXACT LOCATION OF LETTERING AND SIGN WITH OWNER, SUBMIT TO ARCHITECT FOR APPROVAL PRIOR TO INSTALLATION.

PLOT DATE: 1/24/2020 8:41 AM

CEC
Infrastructure solutions

CEC CORPORATION
4555 W. MEMORIAL ROAD
OKLAHOMA CITY, OKLAHOMA 73142
P: 405.733.4200
WWW.CONNECTCEC.COM

STATE OF OK CERTIFICATE OF AUTHORIZATION
CA-2456 EXP. DATE: 06/30/2020

COPYRIGHT © 2019 CEC. ALL RIGHTS RESERVED.
THIS DRAWING IS PROPERTY OF CEC. ANY REPRODUCTION OR USE FOR OTHER PURPOSES WITHOUT EXPRESS WRITTEN AUTHORIZATION OF CEC IS PROHIBITED.

STATE OF OKLAHOMA
JOSHUA S. HILL
6663
LICENSED ARCHITECT
1/30/20

REVISION HISTORY

NO.	DESCRIPTION	DATE
1	ADDENDUM A	01/30/2020

CONSTRUCTION DOCUMENTS

SUBMITTAL:	
DATE:	09212018
PROJECT NO.	-
DESIGNED BY:	KO
DRAWN BY:	KO
APPROVED BY:	JH
SCALE:	AS SHOWN

MAINTENANCE FACILITY
DIVISION 05 - BECKHAM COUNTY
OKLAHOMA DEPARTMENT OF TRANSPORTATION
SAYRE, OKLAHOMA

SHEET NAME
ELEVATIONS

SHEET
MA4.0

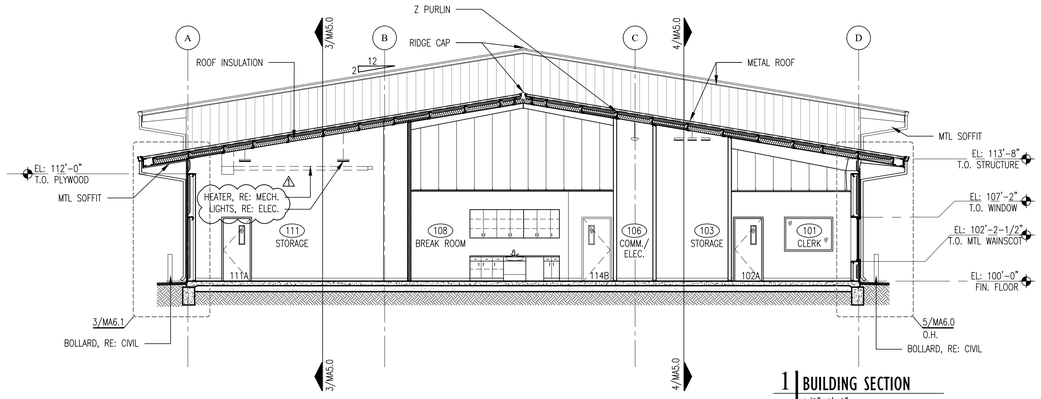

1 BUILDING SECTION
1/8"=1'-0"

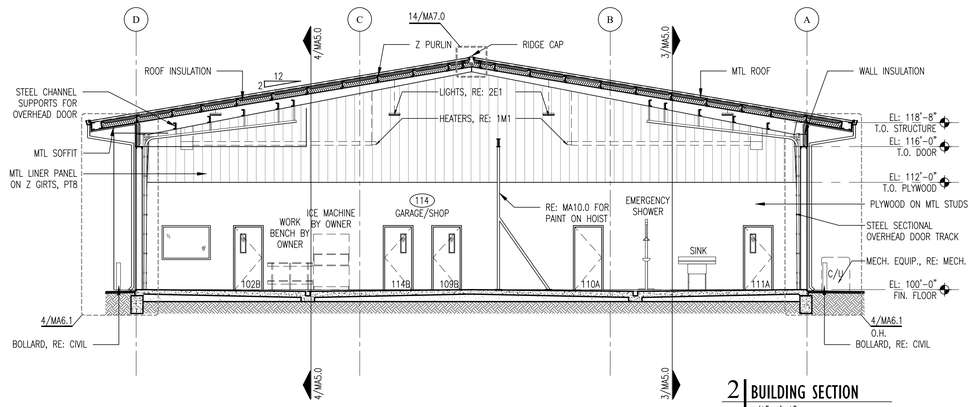

2 BUILDING SECTION
1/8"=1'-0"

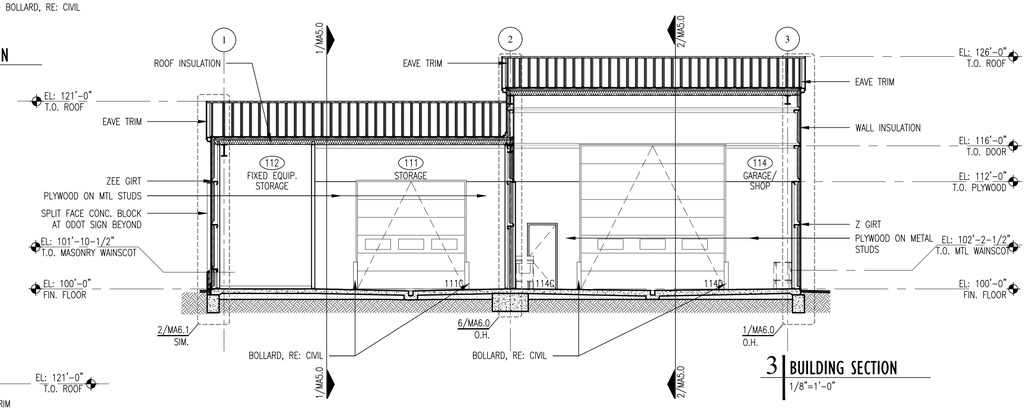

3 BUILDING SECTION
1/8"=1'-0"

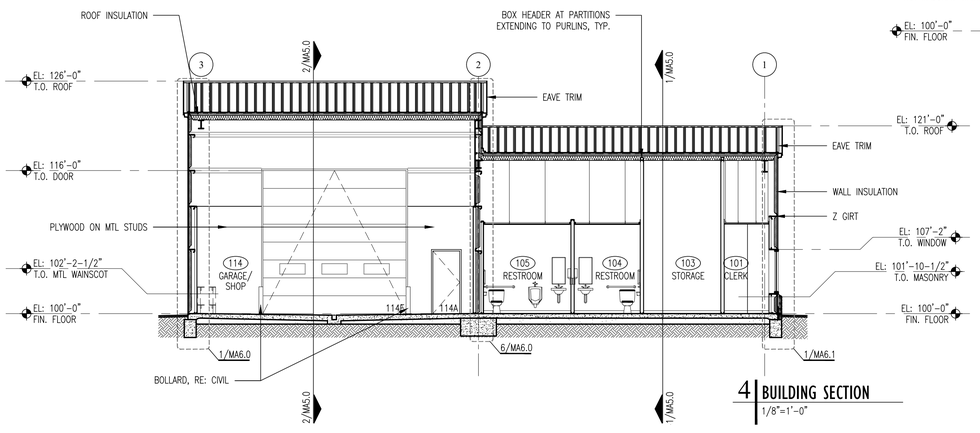

4 BUILDING SECTION
1/8"=1'-0"

PLOT DATE: 1/24/2020 8:41 AM

CEC
Infrastructure solutions

CEC CORPORATION
655 W. MEMORIAL ROAD
OKLAHOMA CITY, OK 73114
P: 405.753.4200
WWW.CONNECTCEC.COM
STATE OF OK CERTIFICATE OF AUTHORIZATION
CA-2456 EXP. 06/30/2020

COPYRIGHT © 2019 CEC. ALL RIGHTS RESERVED.
THIS DRAWING IS PROPERTY OF CEC. ANY REPRODUCTION OR USE FOR OTHER PURPOSES WITHOUT EXPRESS WRITTEN AUTHORIZATION OF CEC IS PROHIBITED.

STATE OF OKLAHOMA
JOSHUA S. HILL
6663
LICENSED ARCHITECT
1/30/20

REVISION HISTORY

NO.	DESCRIPTION	DATE
1	ADDENDUM A	01/30/2020

SUBMITTAL:	CONSTRUCTION DOCUMENTS
DATE:	09/21/2018
PROJECT NO.	-
DESIGNED BY:	KO
DRAWN BY:	KO
APPROVED BY:	JH
SCALE:	AS SHOWN

MAINTENANCE FACILITY

DIVISION 05 - BECKHAM COUNTY
OKLAHOMA DEPARTMENT OF TRANSPORTATION

SAYRE, OKLAHOMA

SHEET NAME
BUILDING SECTIONS

SHEET
MA5.0

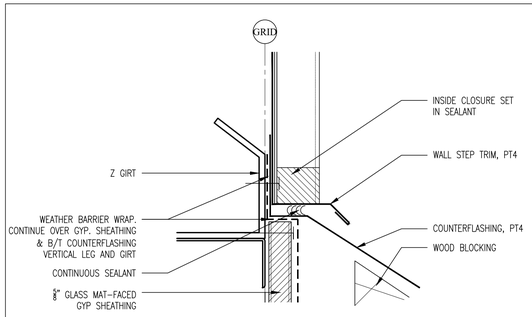

19 SECTION DETAIL
6"=1'-0"

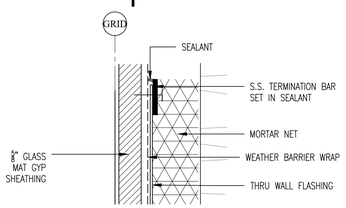

18 SECTION DETAIL
6"=1'-0"

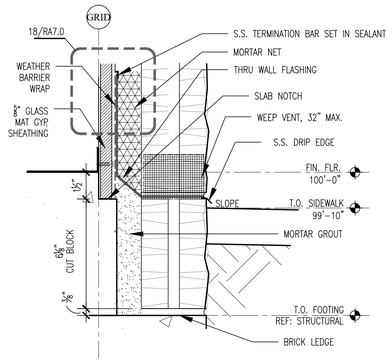

17 SECTION DETAIL
3"=1'-0"

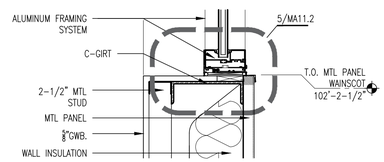

16 SECTION DETAIL
1 1/2"=1'-0"

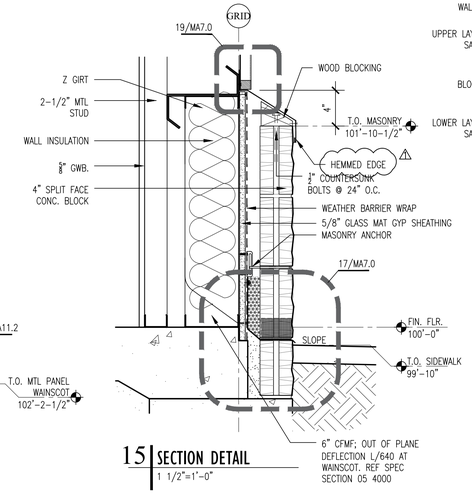

15 SECTION DETAIL
1 1/2"=1'-0"

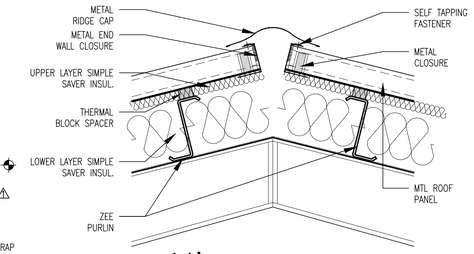

14 SECTION DETAIL
1 1/2"=1'-0"

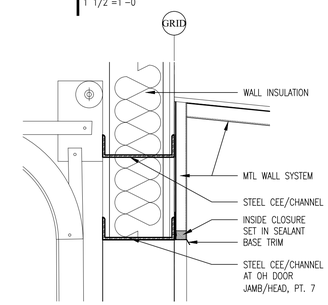

13 SECTION DETAIL
1 1/2"=1'-0"

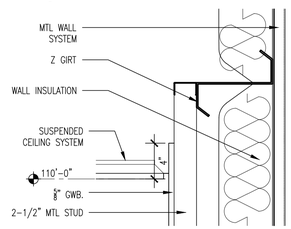

12 SECTION DETAIL
1 1/2"=1'-0"

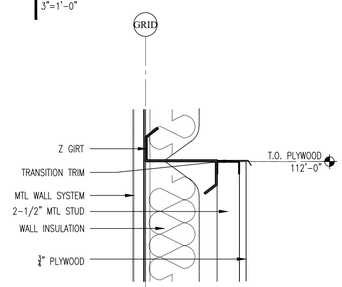

11 SECTION DETAIL
1 1/2"=1'-0"

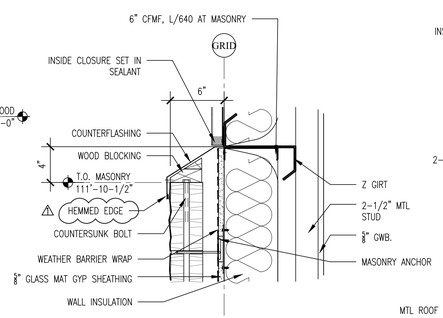

10 SECTION DETAIL
1 1/2"=1'-0"

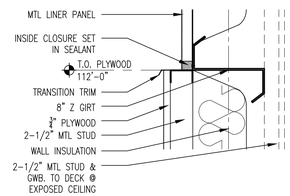

9 SECTION DETAIL
1 1/2"=1'-0"

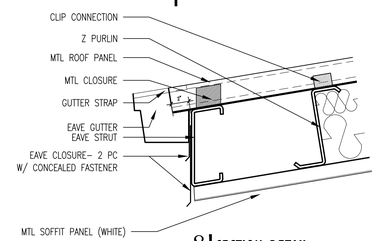

8 SECTION DETAIL
1 1/2"=1'-0"

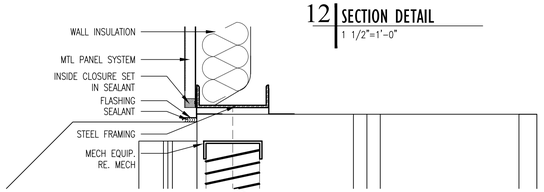

7a SECTION DETAIL
1 1/2"=1'-0"

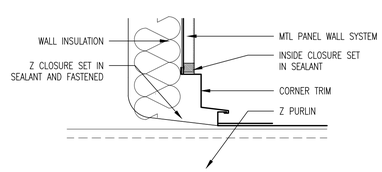

6 SECTION DETAIL
1 1/2"=1'-0"

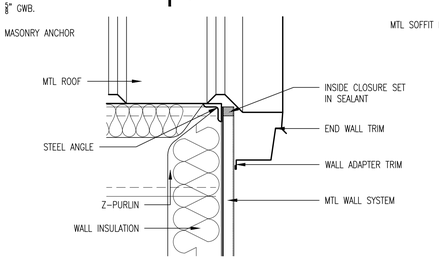

3 SECTION DETAIL
1 1/2"=1'-0"

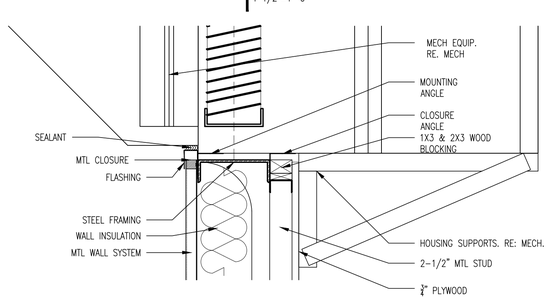

7b SECTION DETAIL
1 1/2"=1'-0"

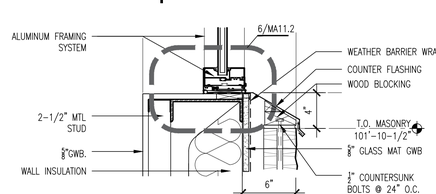

5 SECTION DETAIL
1 1/2"=1'-0"

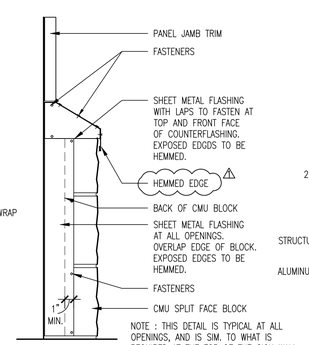

NOTE : THIS DETAIL IS TYPICAL AT ALL OPENINGS, AND IS SIM. TO WHAT IS REQUIRED AT THE TOP OF THE SIGN WALL.

4 SECTION DETAIL
1 1/2"=1'-0"

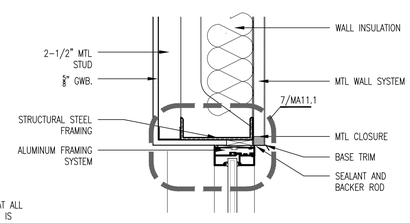

2 SECTION DETAIL
1 1/2"=1'-0"

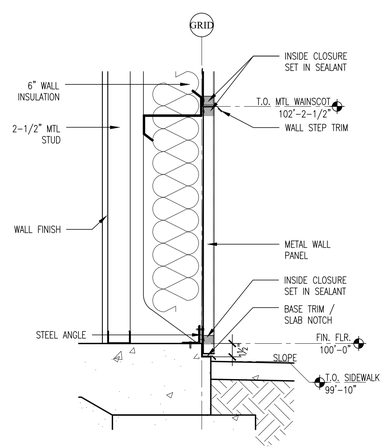

1 SECTION DETAIL
1 1/2"=1'-0"

CEC
Infrastructure solutions

CEC CORPORATION
855 W. MEMORIAL ROAD
OKLAHOMA CITY, OKLAHOMA 73142
P: 405 753 4200
WWW.CONNECTCEC.COM
STATE OF OK CERTIFICATE OF AUTHORIZATION
CA-2456 EXP. 06/30/2020

COPYRIGHT © 2019 CEC. ALL RIGHTS RESERVED.
THIS DRAWING IS PROPERTY OF CEC. ANY REPRODUCTION OR USE OF THIS DRAWING WITHOUT EXPRESS WRITTEN AUTHORIZATION OF CEC IS PROHIBITED.

STATE OF OKLAHOMA
JOSHUA S. HILL
21663
LICENSED ARCHITECT
1/30/20

REVISION HISTORY

NO.	DESCRIPTION	DATE
1	ADDENDUM A	01/30/2020

SUBMITTAL:	CONSTRUCTION DOCUMENTS
DATE:	09/21/2018
PROJECT NO:	-
DESIGNED BY:	KO
DRAWN BY:	KO
APPROVED BY:	JH
SCALE:	AS SHOWN

MAINTENANCE FACILITY

DIVISION 05 - BECKHAM COUNTY
OKLAHOMA DEPARTMENT OF TRANSPORTATION
SAYRE, OKLAHOMA

SHEET NAME
SECTION DETAILS

SHEET
MA7.0

PLOT DATE: 1/24/2020 8:42 AM

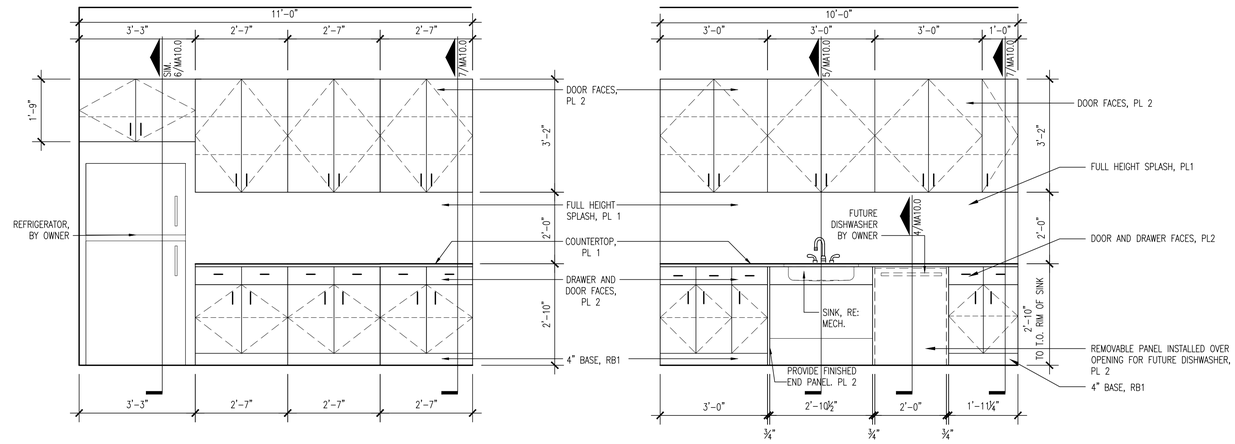

1 NOT USED

2 MILLWORK ELEVATION
1/2"=1'-0"

3 MILLWORK ELEVATION
1/2"=1'-0"

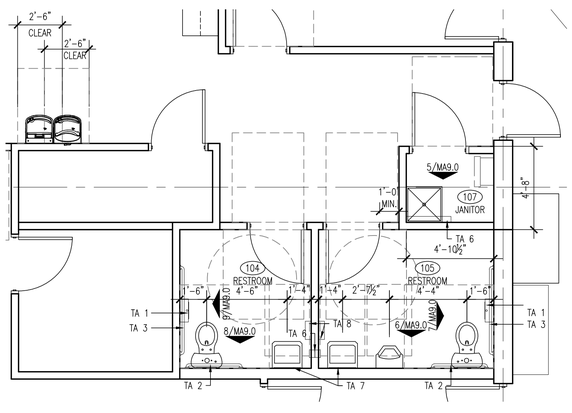

4 ENLARGED TOILET PLAN
1/4"=1'-0"

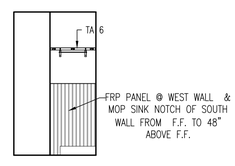

5 JANITOR ROOM ELEVATION
1/4"=1'-0"

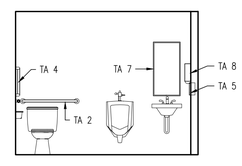

6 TOILET ELEVATION
1/4"=1'-0"

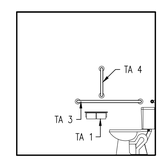

7 TOILET ELEVATION
1/4"=1'-0"

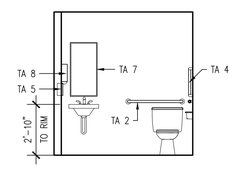

8 TOILET ELEVATION
1/4"=1'-0"

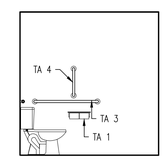

9 TOILET ELEVATION
1/4"=1'-0"

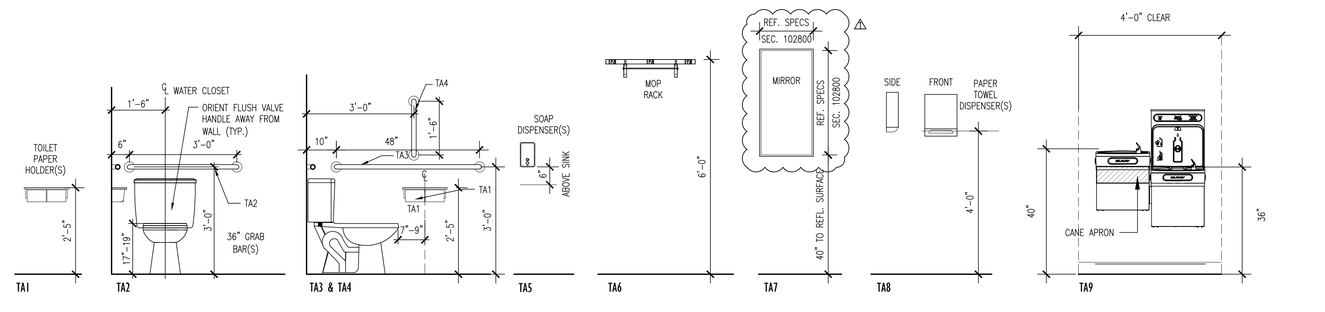

10 TOILET ACCESSORIES SCHEDULE
1/2"=1'-0"

PLOT DATE: 1/24/2020 8:42 AM

CEC
Infrastructure solutions

CEC CORPORATION
4555 W. MEMORIAL ROAD
OKLAHOMA CITY, OKLAHOMA 73142
P: 405.753.4200
WWW.CONNECTCEC.COM

STATE OF OK CERTIFICATE OF AUTHORIZATION
CA-2456 EXP. DATE 06/30/2020

COPYRIGHT © 2019 CEC. ALL RIGHTS RESERVED.
THIS DRAWING IS PROPERTY OF CEC. ANY REPRODUCTION OR USE OF THIS DRAWING WITHOUT EXPRESS WRITTEN AUTHORIZATION OF CEC IS PROHIBITED.

STATE OF OKLAHOMA
JOSHUA S. HILL
16663
LICENSED ARCHITECT
1/30/20

REVISION HISTORY

NO.	DESCRIPTION	DATE
1	ADDENDUM A	01/30/2020

SUBMITTAL: CONSTRUCTION DOCUMENTS
DATE: 09/21/2018
PROJECT NO: -
DESIGNED BY: KO
DRAWN BY: KO
APPROVED BY: JH
SCALE: AS SHOWN

MAINTENANCE FACILITY
DIVISION 05 - BECKHAM COUNTY
OKLAHOMA DEPARTMENT OF TRANSPORTATION
SAYRE, OKLAHOMA

SHEET NAME
MILLWORK /TOILET ELEVATIONS

SHEET
MA9.0

SIGN SCHEDULE

SIZE D	SIZE L	TEXT	DETAIL REF.	BACKGROUND COLOR	LETTERS/SYMB. "H"	LETTERS/SYMB. COLOR	MOUNTING HEIGHT	REMARKS
REGULATORY SIGNS								
8"	8"	MEN	1/MA10.0	PANTONE 2728	1"	WHITE	5'-0"	SIGN TO COMPLY WITH LOCAL AND FEDERAL REGULATORY STANDARDS
8"	8"	WOMEN	2/MA10.0	PANTONE 2728	1"	WHITE	5'-0"	SIGN TO COMPLY WITH LOCAL AND FEDERAL REGULATORY STANDARDS
4"	8"	OFFICE	3/MA10.0	PANTONE 2728	5/8"	WHITE	5'-0"	SIGN TO HAVE BRAILLE & 1/32" RAISED LETTERS.
4"	8"	WAREHOUSE	3/MA10.0	PANTONE 2728	5/8"	WHITE	5'-0"	SIGN TO HAVE BRAILLE & 1/32" RAISED LETTERS.
4"	8"	BREAK ROOM	3/MA10.0	PANTONE 2728	5/8"	WHITE	5'-0"	SIGN TO HAVE BRAILLE & 1/32" RAISED LETTERS.
4"	8"	STORAGE	3/MA10.0	PANTONE 2728	5/8"	WHITE	5'-0"	SIGN TO HAVE BRAILLE & 1/32" RAISED LETTERS.
4"	8"	STORAGE	3/MA10.0	PANTONE 2728	5/8"	WHITE	5'-0"	SIGN TO HAVE BRAILLE & 1/32" RAISED LETTERS.
4"	8"	JANITOR	3/MA10.0	PANTONE 2728	5/8"	WHITE	5'-0"	SIGN TO HAVE BRAILLE & 1/32" RAISED LETTERS.
4"	8"	COMMUNICATIONS/ ELECTRICAL	3/MA10.0	PANTONE 2728	5/8"	WHITE	5'-0"	SIGN TO HAVE BRAILLE & 1/32" RAISED LETTERS.
4"	8"	FIRE ALARM ROOM	3/MA10.0	PANTONE 2728	5/8"	WHITE	5'-0"	SIGN TO HAVE BRAILLE & 1/32" RAISED LETTERS.

ROOM FINISH SCHEDULE

	Number	Room Name	Floors: Floor	Floors: Base	Walls: Plan North	Walls: Plan East	Walls: Plan South	Walls: Plan West	Ceiling: Ceiling	Notes
ODOT	--	--	--	--	--	--	--	--	--	--
	101	CLERK	HC1/EPOXY	RB1	PT1	PT1	PT1	PT1	ACT1/CG1	12
	102	OFFICE	HC1/EPOXY	RB1	PT1	PT1	PT1	PT1	ACT1/CG1	12
	103	STORAGE	HC1	RB1	PT1	PT1	PT1	PT1	EXP	9
	104	RESTROOM	HC1/EPOXY	RB1	PT1	PT1	PT1	PT1	ACT1/CG1	12
	105	RESTROOM	HC1/EPOXY	RB1	PT1	PT1	PT1	PT1	ACT1/CG1	12
	106	COMM. ELEC.	HC1	RB1	PT1	PT1	PT1	PT1	EXP	9,16
	107	JANITORS	HC1	RB1	PT1	PT1	PT1	FRP/PT1	EXP	8
	108	BREAK ROOM	HC1/EPOXY	RB1	PT1	PT1	PT1	PT1	ACT1/CG1	12
	109	WAREHOUSE	HC1	RB1	PT1	PT1	PT1	PT1	EXP	9
	110	TOOL STORAGE	HC1	RB1	PT1	PT1	PT1	PT1	EXP	9
	111	STORAGE	HC1	RB1	PT1	PT1	PT1	PT1	EXP	3
	112	FIXED. EQUIP. STORAGE	HC1	RB1	PT1	PT1	PT1	PT1	EXP	9
	113	MECH. ELEC.	HC1	RB1	PT1	PT1	PT1	PT1	EXP	9
	114	GARAGE/SHOP	HC1	RB1	PT1	PT1	PT1	PT1	EXP	3,10
	–	–	–	–	–	–	–	–	–	
	–	–	–	–	–	–	–	–	–	
	–	–	–	–	–	–	–	–	–	
	–	–	–	–	–	–	–	–	–	
	–	–	–	–	–	–	–	–	–	

MATERIAL SCHEDULE

MARK	MATERIAL	MANUF./SUPPLIER	STYLE	COLOR	NOTES
HC1	HARDENED CONCRETE	CONVERGENT CONCRETE TECHNOLOGIES	PENTRASIL-(HD)	–	–
RB1	RUBBER BASE	ROPPE	4" RUBBER COVE BASE	178 PEWTER	
EPOXY	EPOXY COATING (COMMERCIAL GRADE)	ELITE CRETE	FLAKE BROADCAST	SELECTED FROM MANUF. RANGE	
PT1	PAINT	SHERWIN WILLIAMS	SATIN	SW7015 REPOSE GRAY	
PT2	PAINT	SHERWIN WILLIAMS	SATIN	SW7017 DORIAN GRAY	1
PT3	PAINT	SHERWIN WILLIAMS	SATIN	SW7018 DOVETAIL	2
PT4	METAL PANEL	PEMB MANUF.	FLUROPON OR FLUROPON SR	SIM. TO PATINA GREEN	4,11
PT5	HIGH PERFORMANCE ARCHITECTURAL LATEX	SHERWIN WILLIAMS	SEMI-GLOSS	SW7015 REPOSE GRAY	3
PT6	PAINT	SHERWIN WILLIAMS	SATIN	SW6910 DAISY	5
PT7	PAINT	SHERWIN WILLIAMS	SATIN	SEE NOTE	6,7
PT8	METAL PANEL	PEMB MANUF.	FLUROPON OR FLUROPON SR	WHITE	13
PT9	METAL PANEL	PEMB MANUF.	FLUROPON OR FLUROPON SR	SELECTED FROM MANUF. RANGE	15
ACT1	ACOUSTICAL CEILING TILE	ARMSTRONG	FINE FISSURED TEGULAR 2'-0" X 2'-0" TILE	WHITE	
CG1	SUSPENDED CEILING GRID	ARMSTRONG	PRELUDE	WHITE	
PL1	PLASTIC LAMINATE	WILSONART	–	SHADOW	
PL2	PLASTIC LAMINATE	WILSONART	–	STUDIO TEAK	
RS	ROLLER SHADES (MANUAL)	MECHO SHADES	3% OPEN	SELECTED FROM MANUF. RANGE	14

ABBREVIATIONS

ACT – ACOUSTICAL CEILING TILE
BP – BRICK PAVERS
CG – CEILING GRID
CJ – CONTROL JOINT
CL – SUSPENDED CLOUD CEILING
CLD – PANEL CLADDING MATERIAL
CPT – CARPET
CT – CERAMIC OR PORCELAIN TILE
EXP – EXPOSED CEILING/STRUCTURE/WALL
FRP – FIBERGLASS REINFORCED PLASTIC
GL – GLASS
GRN – GRANITE
GRT – GROUT
GT – GLASS TILE
GWB – GYPSUM WALLBOARD
HC – HARDENED CONCRETE
LIN – LINOLEUM
MP – METAL PROFILE
NA – NOT APPLICABLE
NIC – NOT IN CONTRACT
PAD – CARPET PAD
PED – WALK-OFF MAT/ENTRANCE FLOORING
PF – POLYMER FLOORING
PL – PLASTIC LAMINATE
PT – PAINT
QTZ – QUARTZ SURFACING
RB – RUBBER (RESILIENT) BASE
RFL – RUBBER FLOORING
RS – ROLLER SHADES
RST – RUBBER STAIR TREADS
RWP – RECONSTITUTED WOOD PANEL
SST – STAINLESS STEEL
ST – STEEL
TK – TACK BOARD
TR – FLOORING TRANSITION
VCT – VINYL COMPOSITION TILE
VW – VINYL WALL COVERING
WD – WOOD
WVP – WOOD VENEER PANELING

GENERAL FINISH NOTES

A. PROVIDE A TROWEL FINISH ON SLAB IN THE MAINTENANCE BUILDING.

ROOM FINISH SCHEDULE NOTES

1. LOCATED AT INTERIOR HOLLOW METAL DOORS.
2. LOCATED AT INTERIOR HOLLOW METAL DOOR FRAMES.
3. HIGH PERFORMANCE PAINT AND/OR COATINGS ON ALL EXPOSED STEEL
4. LOCATED AT EXTERIOR VERTICAL METAL WALL PANEL
5. LOCATED AT BOLLARDS
6. LOCATED AT EXTERIOR HOLLOW METAL DOORS AND FRAMES.
7. COLOR MATCH TO EXTERIOR STEEL SECTIONAL OVERHEAD DOORS. SUBMIT COLOR FOR APPROVAL.
8. PROVIDE FRP PANELS AT WEST WALL AND MOP SINK NOTCH OF SOUTH WALL FROM F.F. TO 48" ABOVE F.F.
9. APPLY WALL FINISH FROM F.F. TO DECK.
10. PAINT HOIST PT. 5. USE PT. 6 FOR LETTERING. REF. STRUCTURAL.
11. CUSTOM COLOR TO MATCH SAMPLE IN ARCHITECTS OFFICE. SIM. TO FLUROPON- PREMIUM COLOR- KYNAR- PATINA GREEN BY VALSPAR.
12. CEILING HEIGHT 10'-0" FROM FINISH FLOOR.
13. LOCATED AT INTERIOR VERTICAL METAL WALL PANEL AND METAL ROOF.
14. ROLLER SHADES (MANUAL) SHALL BE PROVIDED AT ALL WINDOWS (INTERIOR & I
15. LOCATED AT METAL PANEL WAINSCOT.
16. INCLUDE 4'X4' PLYWOOD ON PLAN SOUTH WALL FOR MOUNTING TTB EQUIPMENT. (RE ELECTRICAL)

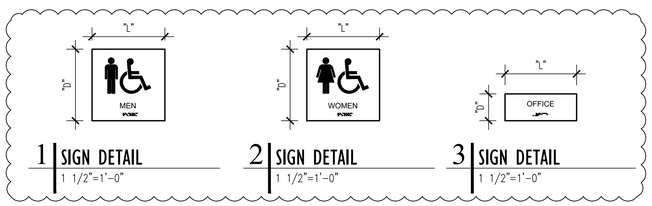

1 SIGN DETAIL
1 1/2"=1'-0"

2 SIGN DETAIL
1 1/2"=1'-0"

3 SIGN DETAIL
1 1/2"=1'-0"

3 NOT USED

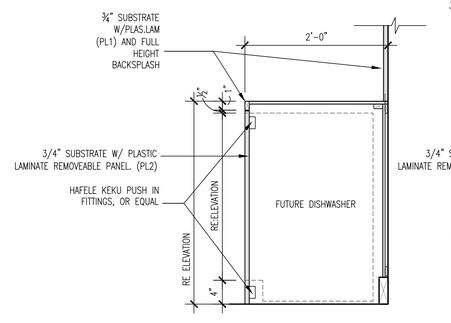

4 SECTION
1"=1'-0"

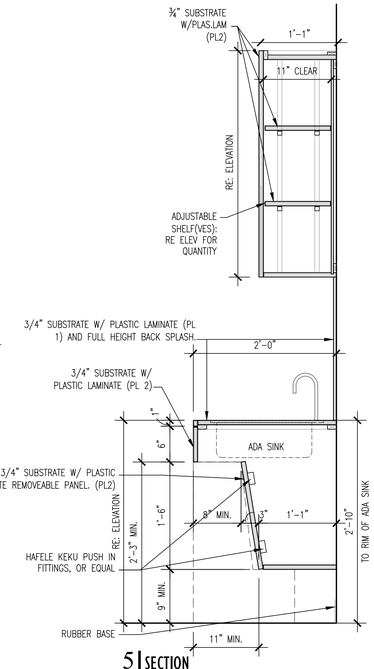

5 SECTION
1"=1'-0"

6 NOT USED

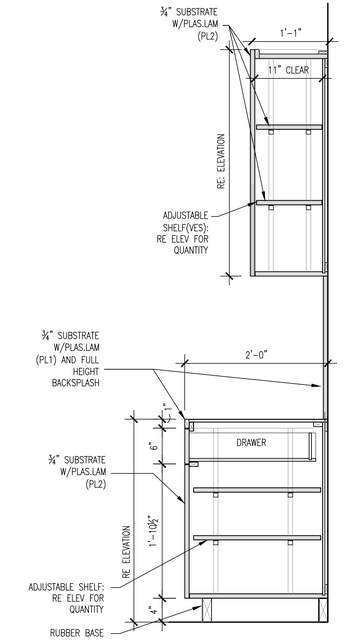

7 SECTION
1"=1'-0"

PLOT DATE: 1/24/2020 8:42 AM

CEC
Infrastructure solutions

CEC CORPORATION
4555 W. MEMORIAL ROAD
OKLAHOMA CITY, OKLAHOMA 73142
P: 405.753.4200
WWW.CONNECTCEC.COM
STATE OF OK CERTIFICATE OF AUTHORIZATION NO. 2003-0001 EXP. 06/30/2020

COPYRIGHT © 2019 CEC. ALL RIGHTS RESERVED.
THIS DRAWING IS PROPERTY OF CEC. ANY REPRODUCTION OR USE OF THIS DRAWING WITHOUT EXPRESS WRITTEN AUTHORIZATION OF CEC IS PROHIBITED.

STATE OF OKLAHOMA
JOSHUA S. HILL
16663
LICENSED ARCHITECT
1/30/20

REVISION HISTORY

NO.	DESCRIPTION	DATE
1	ADDENDUM A	01/30/2020

SUBMITTAL: CONSTRUCTION DOCUMENTS
DATE: 09/21/2018
PROJECT NO: -
DESIGNED BY: KO
DRAWN BY: KO
APPROVED BY: JH
SCALE: AS SHOWN

MAINTENANCE FACILITY
DIVISION 05 - BECKHAM COUNTY
OKLAHOMA DEPARTMENT OF TRANSPORTATION
SAYRE, OKLAHOMA

SHEET NAME
ROOM FINISH SCHEDULE

SHEET
MA10.0

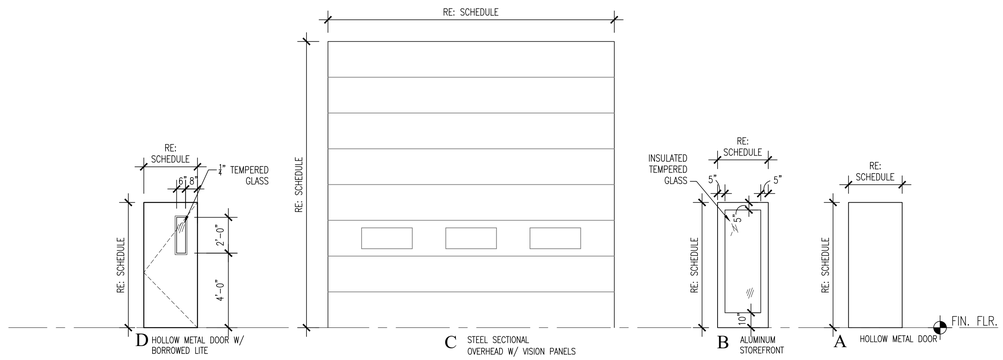

1 DOOR TYPES
1/4"=1'-0"

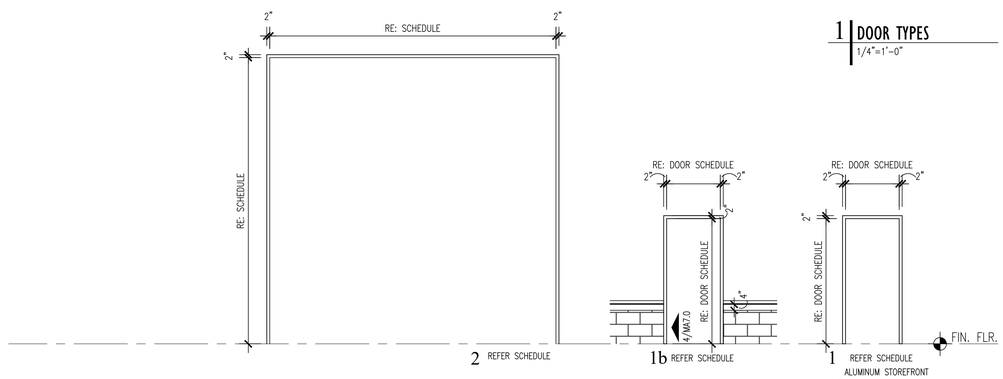

2 DOOR FRAME TYPES
1/4"=1'-0"

DOOR SCHEDULE

	DOOR					FRAME				DETAIL					
	NUMBER	TYPE	MATERIAL	WIDTH	HEIGHT	TYPE	MATERIAL	RATING	HARDWARE	JAMB	HEAD	SILL	NOTES	COMMENTS
	101A	B	ALUM	3'-0"	7'-0"	1	ALUM	–	2.0	6/MA11.1	5/MA11.1	7/MA11.2	1,2	RE: 1/MA11.2 FOR MASONRY CONDITION AT DOOR OPENINGS
	101B	B	ALUM	3'-0"	7'-0"	1	ALUM	–	2.0	6/MA11.1	5/MA11.1	7/MA11.2	1,2	RE: 1/MA11.2 FOR MASONRY CONDITION AT DOOR OPENINGS
	102A	D	HM	3'-0"	7'-0"	1	HM	–	14.0	1/MA11.1	2/MA11.1	–	--	–
	102B	D	HM	3'-0"	7'-0"	1	HM	–	15.0	3/MA11.1	4/MA11.1	–	1	INCLUDE KICK PLATE & DUST CONTROL DOOR SWEEP
	103A	A	HM	3'-0"	7'-0"	1	HM	–	20.0	1/MA11.1	2/MA11.1	–	--	–
	104A	A	HM	3'-0"	7'-0"	1	HM	–	25.0	1/MA11.1	2/MA11.1	–	--	–
	105A	A	HM	3'-0"	7'-0"	1	HM	–	25.0	1/MA11.1	2/MA11.1	–	--	–
	106A	A	HM	3'-0"	7'-0"	1	HM	–	21.0	1/MA11.1	2/MA11.1	–	--	–
	107A	A	HM	3'-0"	7'-0"	1	HM	–	12.0	1/MA11.1	2/MA11.1	–	--	–
	108A	D	HM	3'-0"	7'-0"	1	HM	–	23.0	1/MA11.1	2/MA11.1	–	--	–
	109A	D	HM	3'-0"	7'-0"	1	HM	–	26.0	1/MA11.1	2/MA11.1	–	--	–
	109B	D	HM	3'-0"	3'-0"	1	HM	–	27.0	3/MA11.1	4/MA11.1	–	1	INCLUDE KICK PLATE & DUST CONTROL DOOR SWEEP
	110A	A	HM	3'-0"	7'-0"	1	HM	–	27.0	3/MA11.1	4/MA11.1	–	1	INCLUDE KICK PLATE & DUST CONTROL DOOR SWEEP
	111A	D	HM	3'-0"	7'-0"	1	HM	–	27.0	3/MA11.1	4/MA11.1	–	--	INCLUDE KICK PLATE & DUST CONTROL DOOR SWEEP
	111B	D	HM	3'-0"	7'-0"	1	HM	–	28.0	1/MA11.1	2/MA11.1	–	1	INCLUDE KICK PLATE & DUST CONTROL DOOR SWEEP
	111C	C	STEEL	12'-0"	11'-0"	2	STEEL	–	33.0	13/MA11.1	13/MA7.0	–	1,2,3	
	112A	A	HM	3'-0"	7'-0"	1b	HM	–	6.0	14/MA11.1	15/MA11.1	–	1,2	RE: 4/MA7.0 FOR MASONRY/FLASHING CONDITION AT DOOR OPENINGS
	112B	A	HM	3'-0" (PR.)	7'-0"	1	HM	–	31.0	1/MA11.1	2/MA11.1	–	1,2	–
	113A	A	HM	3'-0"	7'-0"	1	HM	–	7.0	14/MA11.1	15/MA11.1	7/MA11.2	1,2	
	114A	A	HM	3'-0"	7'-0"	1	HM	–	5.0	14/MA11.1	15/MA11.1	7/MA11.2	1,2	
	114B	D	HM	3'-0"	7'-0"	1	HM	–	29.0	3/A11.1	4/A11.1	–	1	INCLUDE KICK PLATE & DUST CONTROL DOOR SWEEP
	114C	A	HM	3'-0"	7'-0"	1	HM	–	5.0	14/MA11.1	15/MA11.1	7/MA11.2	1,2	
	114D	C	STEEL	16'-0"	16'-0"	2	STEEL	–	33.0	13/MA11.1	13/MA7.0	–	1,2,3	
	114E	C	STEEL	16'-0"	16'-0"	2	STEEL	–	33.0	13/MA11.1	13/MA7.0	–	1,2,3	

GENERAL NOTES:

1. ALL GLAZING IN DOORS AND BORROWED LITES SHALL BE TEMPERED AS REQUIRED BY CODE.
2. ALL LOCKSETS SHALL BE KEYED AT THE DIRECTION OF OWNER.

DOOR SCHEDULE NOTES

1. INSULATED DOOR.
2. PROVIDE WEATHERSTRIPPING AROUND DOOR.
3. USE PT. 7 @ STEEL OF OH DOOR HEAD AND JAMB.
4. REFERENCE 7/MA11.2 AT ALL EXTERIOR DOORS

GLAZING NOTES:

1. ALL ALUMINUM FRAMING TO BE CLEAR ANODIZED.

GLAZING LEGEND

1/4" TEMPERED

LOW E INSULATED

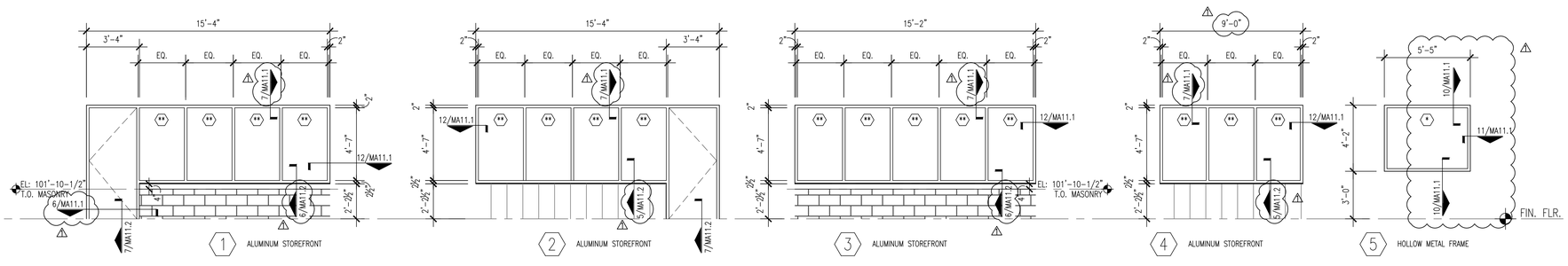

3 GLAZING ELEVATION
1/4"=1'-0"

PLOT DATE: 1/24/2020 8:43 AM

CEC
infrastructure solutions

CEC CORPORATION
4555 W. MEMORIAL ROAD
OKLAHOMA CITY, OKLAHOMA 73142
P: 405.753.4200
WWW.CONNECTCEC.COM
STATE OF OK CERTIFICATE OF AUTHORIZATION
CA 2559 EXP. DATE JUNE 30, 2020

COPYRIGHT © 2019 CEC. ALL RIGHTS RESERVED.
THIS DRAWING IS PROPERTY OF CEC. ANY REPRODUCTION OR USE FOR OTHER PURPOSES WITHOUT EXPRESS WRITTEN AUTHORIZATION OF CEC IS PROHIBITED.

STATE OF OKLAHOMA
JOSHUA S. HILL
16663
LICENSED ARCHITECT
1/30/20

REVISION HISTORY

NO.	DESCRIPTION	DATE
1	ADDENDUM A	01/30/2020

CONSTRUCTION DOCUMENTS

SUBMITTAL:

DATE:	09/21/2018
PROJECT NO:	-
DESIGNED BY:	KO
DRAWN BY:	KO
APPROVED BY:	JH
SCALE:	AS SHOWN

MAINTENANCE FACILITY

DIVISION 05 - BECKHAM COUNTY

OKLAHOMA DEPARTMENT OF TRANSPORTATION

SAYRE, OKLAHOMA

SHEET NAME

DOOR SCHEDULE

SHEET

MA11.0

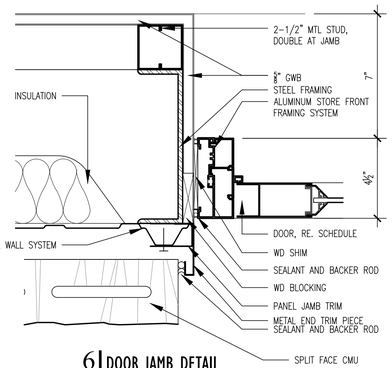

6 DOOR JAMB DETAIL
3"=1'-0"

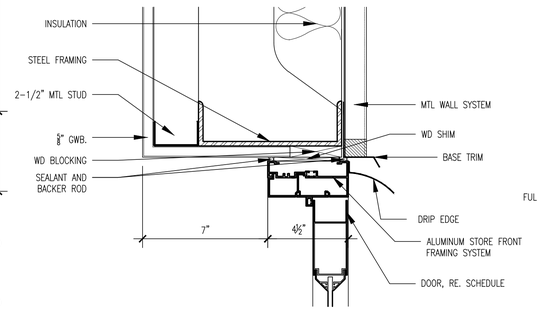

5 DOOR HEAD DETAIL
3"=1'-0"

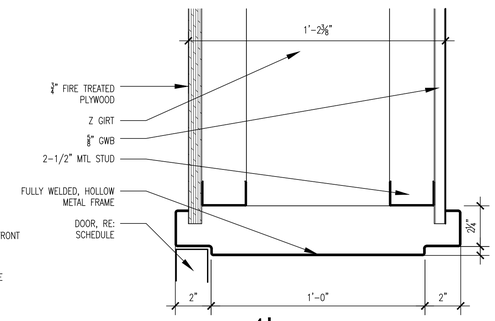

4 DOOR HEAD DETAIL
3"=1'-0"

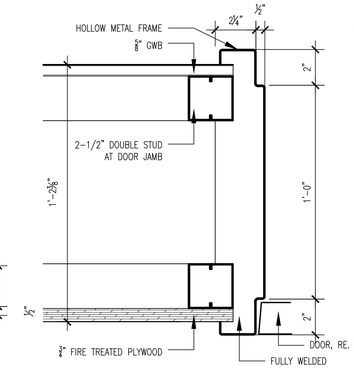

3 DOOR JAMB DETAIL
3"=1'-0"

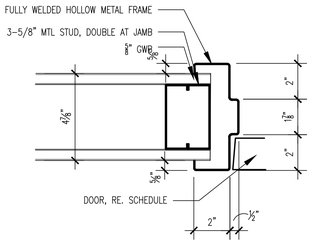

1 DOOR JAMB DETAIL
3"=1'-0"

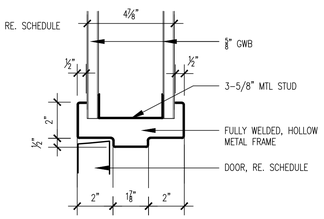

2 DOOR HEAD DETAIL
3"=1'-0"

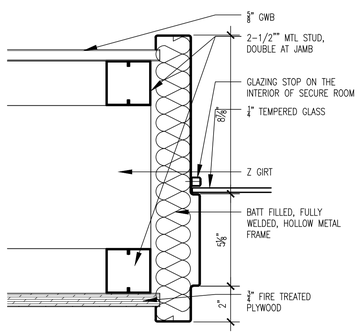

11 WINDOW JAMB DETAIL
3"=1'-0"

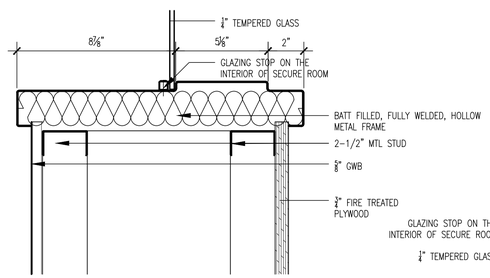

10 WINDOW HEAD & SILL DETAIL
3"=1'-0"

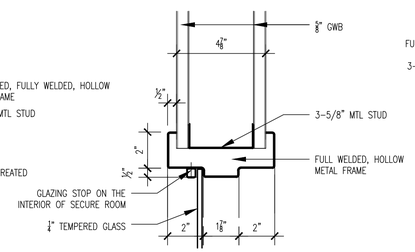

9 WINDOW HEAD & SILL DETAIL
3"=1'-0"

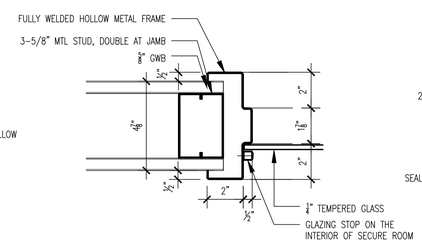

8 WINDOW JAMB DETAIL
3"=1'-0"

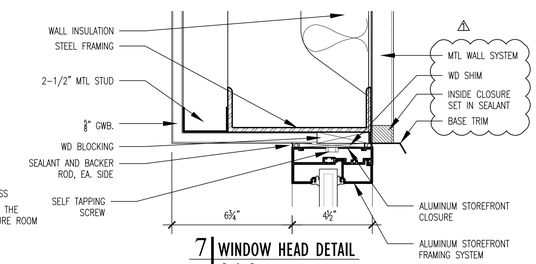

7 WINDOW HEAD DETAIL
3"=1'-0"

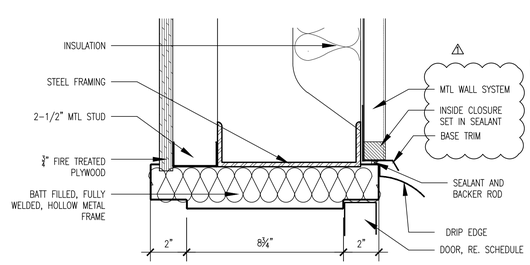

15 DOOR HEAD DETAIL
3"=1'-0"

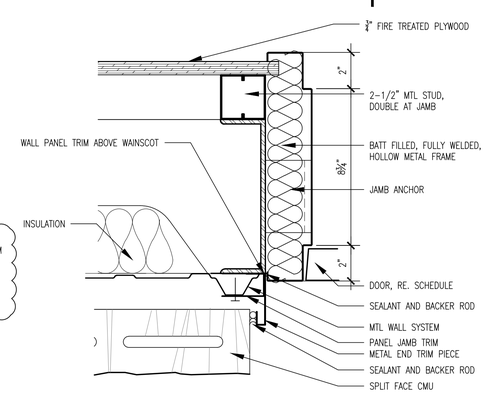

14 DOOR JAMB DETAIL
3"=1'-0"

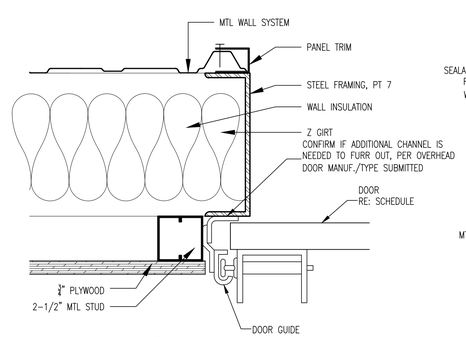

13 O.H. DOOR JAMB DETAIL
3"=1'-0"

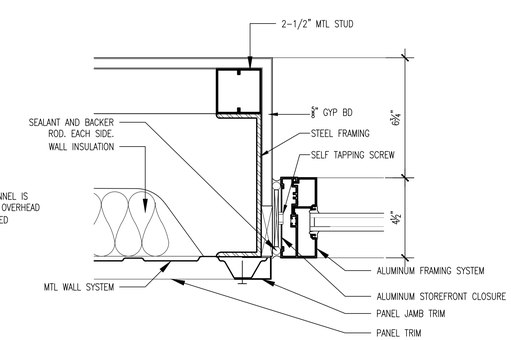

12 WINDOW JAMB DETAIL
3"=1'-0"

PLOT DATE: 1/24/2020 8:43 AM

CEC
Infrastructure solutions

CEC CORPORATION
4555 W. MEMORIAL ROAD
OKLAHOMA CITY, OKLAHOMA 73142
P: 405.733.4200
WWW.CONNECTCEC.COM

STATE OF OK CERTIFICATE OF AUTHORIZATION
CA-2456 EXP. DATE: 06/30/2020

COPYRIGHT © 2019 CEC. ALL RIGHTS RESERVED.
THIS DRAWING IS PROPERTY OF CEC. ANY REPRODUCTION OR USE OF THIS DRAWING WITHOUT EXPRESS WRITTEN AUTHORIZATION OF CEC IS PROHIBITED.

STATE OF OKLAHOMA
JOSHUA S. HILL
16663
LICENSED ARCHITECT
1/30/20

REVISION HISTORY

NO.	DESCRIPTION	DATE
1	ADDENDUM A	01/30/2020

CONSTRUCTION DOCUMENTS

SUBMITTAL:

DATE:	09/21/2018
PROJECT NO:	-
DESIGNED BY:	KO
DRAWN BY:	KO
APPROVED BY:	JH
SCALE:	AS SHOWN

MAINTENANCE FACILITY

DIVISION 05 - BECKHAM COUNTY
OKLAHOMA DEPARTMENT OF TRANSPORTATION
SAYRE, OKLAHOMA

SHEET NAME
DOOR DETAILS

SHEET
MA11.1

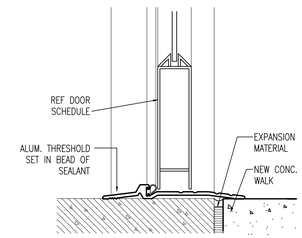

7 SECTION DETAIL
3"=1'-0"

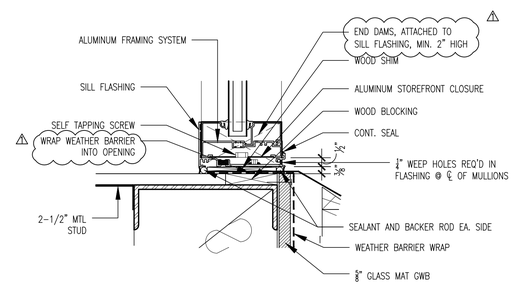

6 SECTION DETAIL
3"=1'-0"

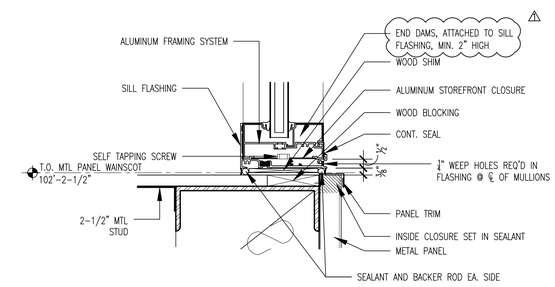

5 SECTION DETAIL
3"=1'-0"

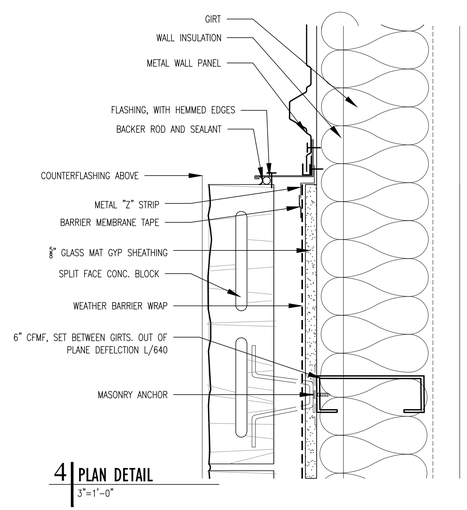

4 PLAN DETAIL
3"=1'-0"

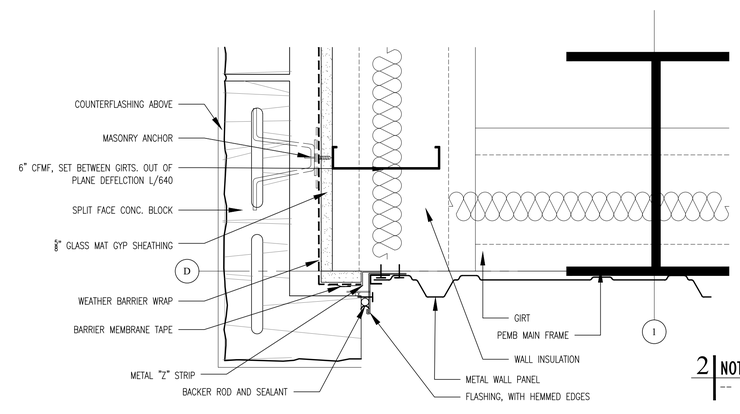

3 PLAN DETAIL
3"=1'-0"

2 NOT USED
--

1 NOT USED
--

PLOT DATE: 1/24/2020 8:43 AM

CEC
Infrastructure solutions

CEC CORPORATION
655 W. MEMORIAL ROAD
OKLAHOMA CITY, OKLAHOMA 73142
P: 405.753.4200
WWW.CONNECTCEC.COM

STATE OF OK CERTIFICATE OF AUTHORIZATION
CA-2456 EXP. 6/30/2020

COPYRIGHT © 2019 CEC. ALL RIGHTS RESERVED.
THIS DRAWING IS PROPERTY OF CEC. ANY REPRODUCTION OR USE OF THIS DRAWING WITHOUT EXPRESS WRITTEN AUTHORIZATION OF CEC IS PROHIBITED.

STATE OF OKLAHOMA
JOSHUA S. HILL
16663
LICENSED ARCHITECT
1/30/20

REVISION HISTORY

NO.	DESCRIPTION	DATE
1	ADDENDUM A	01/30/2020

SUBMITTAL:	CONSTRUCTION DOCUMENTS
DATE:	09/21/2018
PROJECT NO.	--
DESIGNED BY:	KO
DRAWN BY:	KO
APPROVED BY:	JH
SCALE:	AS SHOWN

MAINTENANCE FACILITY
DIVISION 05 - BECKHAM COUNTY
OKLAHOMA DEPARTMENT OF TRANSPORTATION
SAYRE, OKLAHOMA

SHEET NAME
DOOR DETAILS

SHEET
MA11.2

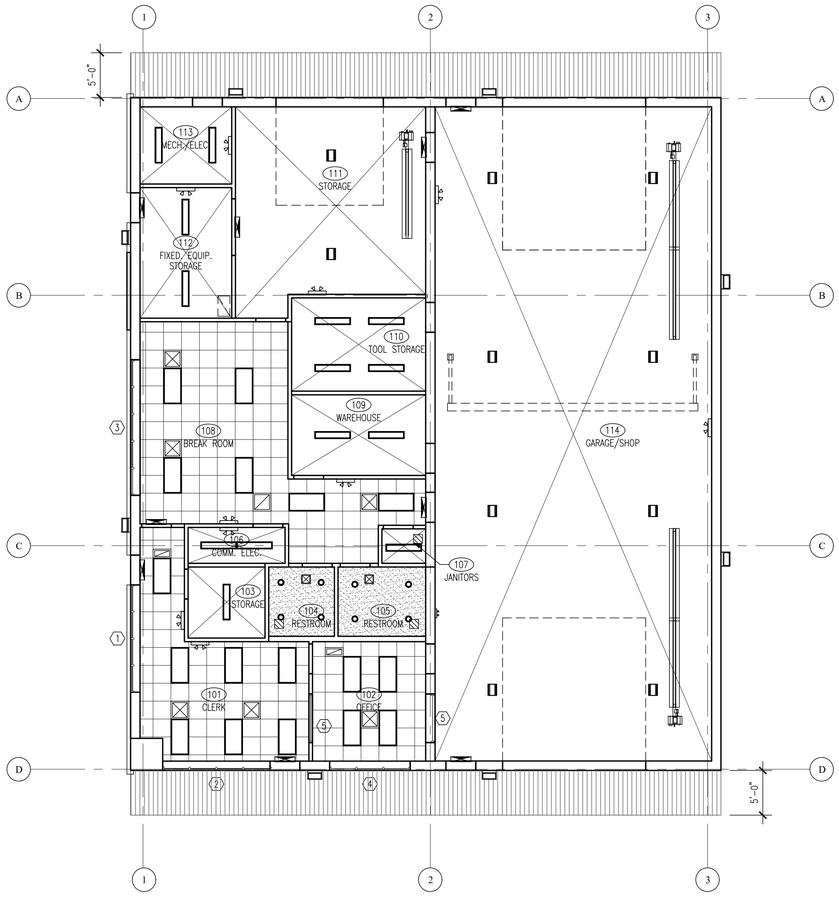

CONTRACTOR TO CONFIRM TRUE NORTH WITH CIVIL SITE PLAN

1 REFLECTED CEILING PLAN

1/8"=1'-0"

CEILING LEGEND

- 2'x2' ACOUSTICAL TILE CEILING HEIGHT IS 10'-0" FROM F.F.
- EXPOSED STRUCTURE: FABRIC BARRIER
- GYPSUM BOARD CEILING CEILING HEIGHT IS 10'-0" FROM F.F.
- MTL SOFFIT

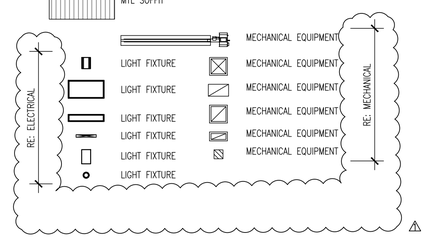

PLOT DATE: 1/24/2020 8:43 AM

CEC
Infrastructure solutions

CEC CORPORATION
4555 W. MEMORIAL ROAD
OKLAHOMA CITY, OKLAHOMA 73142
P: 405.753.4200
WWW.CONNECTCEC.COM

STATE OF OK CERTIFICATE OF AUTHORIZATION
CA-2456 EXP. 06/30/2020

COPYRIGHT © 2019 CEC. ALL RIGHTS RESERVED.
THIS DRAWING IS PROPERTY OF CEC. ANY
REPRODUCTION OR USE FOR OTHER PURPOSES
WITHOUT EXPRESS WRITTEN AUTHORIZATION OF
CEC IS PROHIBITED.

STATE OF OKLAHOMA
JOSHUA S. HILL
21663
LICENSED ARCHITECT

1/30/20

REVISION HISTORY

NO.	DESCRIPTION	DATE
1	ADDENDUM A	01/30/2020

SUBMITTAL:	CONSTRUCTION DOCUMENTS
DATE:	09/21/2018
PROJECT NO:	-
DESIGNED BY:	KO
DRAWN BY:	KO
APPROVED BY:	JH
SCALE:	AS SHOWN

MAINTENANCE FACILITY

DIVISION 05 - BECKHAM COUNTY
OKLAHOMA DEPARTMENT OF TRANSPORTATION

SAYRE, OKLAHOMA

SHEET NAME

REFLECTED CEILING PLAN

SHEET

MA12.0

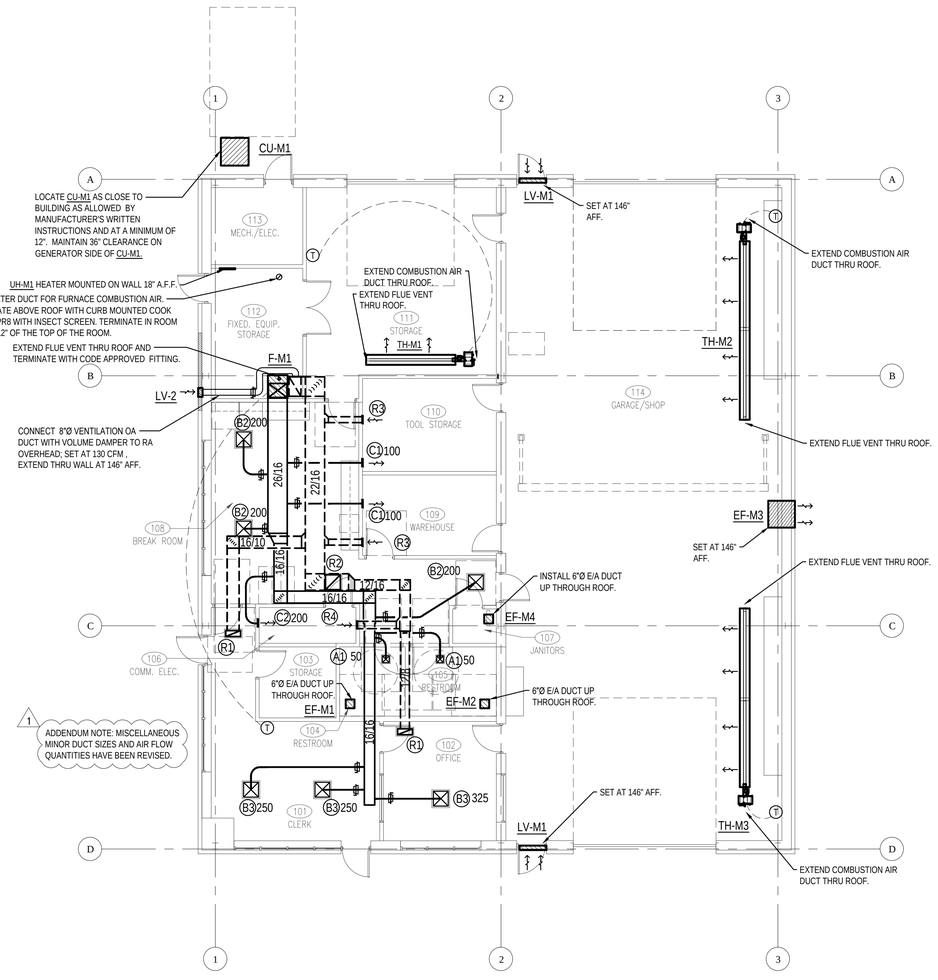

SEE CIVIL PLAN FOR TRUE NORTH

A HVAC Plan - Maintenance Building

SCALE : 1/8" = 1'-0"

PLOT DATE: 1/31/2020 11:23 AM

CEC

CEC CORPORATION
4555 W. MEMORIAL ROAD
OKLAHOMA CITY, OKLAHOMA 73142
P: 405.752.4200
WWW.CONNECTCEC.COM

STATE OF OK CERTIFICATE OF AUTHORIZATION
CA-2576 EXP. 06/30/2020

COPYRIGHT © 2019 CEC. ALL RIGHTS RESERVED.
THIS DRAWING IS PROPERTY OF CEC. ANY REPRODUCTION OR USE FOR OTHERS WITHOUT EXPRESS WRITTEN AUTHORIZATION OF CEC IS PROHIBITED.

LICENSED PROFESSIONAL ENGINEER
Ezra Zoschke
24607
1/31/2020
OKLAHOMA

REVISION HISTORY

NO.	DESCRIPTION	DATE
1	ADDENDUM A	01/30/2020

SUBMITTAL: CONSTRUCTION DOCUMENTS

DATE:	09/21/2018
PROJECT NO:	180131.0018.06
DESIGNED BY:	AP/EZ
DRAWN BY:	AP/EZ/BM
APPROVED BY:	ACB
SCALE:	AS SHOWN

MAINTENANCE FACILITY

DIVISION 05 - BECKHAM COUNTY
OKLAHOMA DEPARTMENT OF TRANSPORTATION

SAYRE, OKLAHOMA

SHEET NAME

MAINTENANCE HVAC PLAN

SHEET

MM1.1

FURNACE AND COIL SCHEDULE

MARK	TOTAL CFM	ESP (IN-WG)	ELECTRICAL DATA				COIL SECTION		HEATING SECTION					COMBUSTION AIR TYPE	POSITION	MFG	MODEL	NOTES
			HP	VOLTS/ PHASE	MCA (AMPS)	MOP (AMPS)	MIN TOTAL OUTPUT (MBH)	MIN SENSIBLE OUTPUT (MBH)	FUEL	AFUE	STAGES	HEATING INPUT (MBH)	HEATING OUTPUT (MBH)					
F-M1	1900	0.5	3/4	120/1	14.7	15	60	48	GAS	80%	1	120	96	NATURAL VENT	UPFLOW	GOODMAN	GMS8	ALL

NOTES:

1. PROVIDE 7-DAY PROGRAMMABLE COOL/HEAT THERMOSTATS THAT MATCH EQUIPMENT HEATING & COOLING STAGES WITH AUTOMATIC CHANGEOVER.
2. PROVIDE 2" RETURN FILTER RACK WITH THROWAWAY MERV 8 FILTERS. PROVIDE NEW FILTERS WHEN BUILDING IS TURNED OVER TO OWNER. DO NOT RUN EQUIPMENT WITHOUT FILTERS.
3. PROVIDE 1" PRIMARY CONDENSATE CONNECTION FROM UNIT AND DISCHARGE TO SANITARY SEWER THRU AIR GAP AT AN OWNER APPROVED LOCATION.
4. PROVIDE SECONDARY CONDENSATE DRAIN KILL SWITCH ON OVERFLOW.
5. PROVIDE CASED COILS TO MATCH FURNACE UNIT SIZE AND RESPECTIVE CONDENSING UNIT CAPACITY.
6. UNIT SHALL BE EQUIPPED FOR USE WITH NATURAL GAS FUEL.
7. INSTALL FLUE THRU ROOF PER MANUFACTURER REQUIREMENTS. INSTALL COMBUSTION AIR SUPPLY.

AIR DEVICE SCHEDULE

MARK	MFG	MODEL	TYPE	DESCRIPTION	MOUNTING	DUCT/NECK SIZE	MODULE SIZE	FINISH	NOTES
A1	TITUS	TMS	CEILING SUPPLY	SQUARE LOUVERED DIFFUSER	LAY-IN	6"Ø	12"X12"	WHITE	1,2,3,4,5,6
B1	TITUS	TMS	CEILING SUPPLY	SQUARE LOUVERED DIFFUSER	LAY-IN	6"Ø	24"X24"	WHITE	1,2,3,4,5,6
B2	TITUS	TMS	CEILING SUPPLY	SQUARE LOUVERED DIFFUSER	LAY-IN	8"Ø	24"X24"	WHITE	1,2,3,4,5,6
B3	TITUS	TMS	CEILING SUPPLY	SQUARE LOUVERED DIFFUSER	LAY-IN	10"Ø	24"X24"	WHITE	1,2,3,4,5,6
B4	TITUS	TMS	CEILING SUPPLY	SQUARE LOUVERED DIFFUSER	LAY-IN	12"Ø	24"X24"	WHITE	1,2,3,4,5,6
B5	TITUS	TMS	CEILING SUPPLY	SQUARE LOUVERED DIFFUSER	LAY-IN	14"Ø	24"X24"	WHITE	1,2,3,4,5,6
C1	TITUS	300RS	WALL SUPPLY	SUPPLY GRILL - 3/4" BLADE SPACING	WALL	8"Ø	10"X6"	WHITE	1,2,3,4,5,6
C2	TITUS	300RS	WALL SUPPLY	SUPPLY GRILL - 3/4" BLADE SPACING	WALL	8"Ø	12"X8"	WHITE	1,2,3,4,5,6
R1	TITUS	350RL	EXHAUST/RETURN GRILLE	45° DEFLECTION - 3/4" BLADE SPACING	LAY-IN	10"X22"	12"X24"	WHITE	1,2,3,4,5,6
R2	TITUS	350RL	EXHAUST/RETURN GRILLE	45° DEFLECTION - 3/4" BLADE SPACING	LAY-IN	22"X22"	24"X24"	WHITE	1,2,3,4,5,6
R3	TITUS	350RL	WALL RETURN GRILLE	45° DEFLECTION - 3/4" BLADE SPACING	WALL	8"X6"	10"X8"	WHITE	1,2,3,4,5,6
R4	TITUS	350RL	WALL RETURN GRILLE	45° DEFLECTION - 3/4" BLADE SPACING	WALL	10"X6"	12"X8"	WHITE	1,2,3,4,5,6

NOTES:

1. PROVIDE FACTORY DEVICE MOUNTING FRAMES AT ALL PLASTER, GP WB, AND MASONRY SURFACES TO RECEIVE FINISHED AIR DEVICE.
2. PROVIDE SQUARE-TO-ROUND ADAPTER AS REQUIRED TO ACCOMMODATE ROUND DUCT CONNECTION.
3. CFM FLOW RATE IS SHOWN ADJACENT TO AIR DEVICE MARK UNLESS AIR BALANCING IS NOT CRITICAL FOR THE RESPECTIVE AIR DEVICE.
4. INSTALL INSULATION BACKING ON UNCONDITIONED SIDE OF EACH AIR DEVICE TO PREVENT CONDENSATION.
5. AIR DEVICES LOCATED ABOVE INACCESSIBLE CEILINGS SHALL BE PROVIDED WITH BALANCING DAMPERS ACCESSED AT FRONT FACE OF AIR DEVICE. RETURN AND EXHAUST AIR DEVICES SHALL BE PROVIDED WITH INTEGRAL BALANCING DAMPERS.
6. AIR DEVICES IN EXPOSED CEILING SPACES SHALL BE PROVIDED WITH FACTORY FINISH TO MATCH COLOR SELECTED BY ARCHITECT. REFER TO ARCHITECTURAL DOCUMENTS.

VENTILATION EQUIPMENT SCHEDULE

MARK	SERVES	AIR FLOW RATE (CFM)	ESP (IN-WG)	LOCATION	ELECTRICAL DATA		DRIVE	MFG	MODEL	NOTES
					POWER	VOLTS/PHASE				
EF-M1	117 RESTROOM	90	0.25	CEILING	65 W	120/1	DIRECT	COOK	GC-146	1,3,4,7
EF-M2	118 RESTROOM	90	0.25	CEILING	65 W	120/1	DIRECT	COOK	GC-146	1,3,4,7
EF-M3	114 GARAGE/SHOP	5432	0.3	WALL	372 W	120/1	BELT	GREEN HECK	SBCE-3H30-5	1,5,6
EF-M4	107 JANITORS	90	0.25	CEILING	65 W	120/1	DIRECT	COOK	GC-146	1,3,4,7

NOTES

1. FAN SHALL BE INSTALLED WITH UNIT MOUNTED FAN SPEED CONTROLLER.
2. INTERLOCK FAN WITH ADJACENT LIGHTS TO ENERGIZE FAN WHEN BUILDING IS OCCUPIED.
3. INTERLOCK FAN WITH RESPECTIVE ROOM LIGHTS TO ENERGIZE FAN WHEN ROOM IS IN USE.
4. TERMINATE EXHAUST DUCT THROUGH ROOF AND TERMINATE WITH CURB MOUNTED COOK MODEL PR8 GRAVITY VENTILATOR WITH BACKDRAFT DAMPER, OR EQUAL.
5. PROVIDE MANUAL WALL SWITCH FOR FAN ACTIVATION AT LOCATION DETERMINED BY OWNER.
6. PROVIDE WITH FACTORY FURNISHED GRAVITY BACKDRAFT DAMPER, WALL COLLAR, MOTOR SIDE GUARD, 45 DEGREE WEATHERHOOD
7. INCLUDE MFG ALUMINUM CEILING GRATE.

CONDENSING UNIT SCHEDULE

MARK	COOLING INFORMATION				REFRIGERANT SUCTION LINE SIZE (INCHES)	REFRIGERANT LIQUID LINE SIZE (INCHES)	WEIGHT (LBS.)	ELECTRICAL DATA			MFG	MODEL	NOTES
	NOMINAL TONS	NOMINAL SEER	STAGES	AMBIENT AIR (°F)				VOLTS/ PHASE	MCA (AMPS)	MOP (AMPS)			
CU-M1	5	14	1	100°F	1-1/8	3/8	226	220/1	33	50	GOODMAN	GSX140601K	ALL

NOTES:

1. PROVIDE UNIT WITH ANTI-RECYCLE TIMER, LOW AND HIGH PRESSURE SAFETY SWITCHES, LIQUID LINE FILTER, REFRIGERANT LOCKS, AND SIGHT GLASS. INSTALL UNITS LEVEL ON COMPATIBLE 6" EQUIPMENT SUPPORT RISERS.

LOUVER SCHEDULE

MARK	MFG	MODEL NO.	TYPE	MOUNTING	NOMINAL SIZE (W"XH")	FREE AREA (SQ. FT.)	PRESSURE DROP (IN. WG)	DAMPER	NOTES
LV-M1	GREENHECK	ESD-603	INTAKE	WALL	36X36	4.34	.04	MOTOR OPERATED	1,2,3,4
LV-M2	GREENHECK	ESD-635	INTAKE	WALL	12X12	.19	.075	MANUAL	1,3

NOTES:

1. LOUVER CONSTRUCTION SHALL BE EXTRUDED ALUMINUM WITH DRAINABLE FIXED BLADES. PROVIDE LOUVER WITH BIRD SCREEN AND MOUNTING FRAME SUITABLE FOR INTENDED INSTALLATION. LOUVER SHALL HAVE A FACTORY KYNAR 500 FINISH, CUSTOM COLOR TO MATCH ADJACENT METAL BUILDING SIDING, FINAL APPROVAL PER ARCHITECT.
2. PROVIDE MOTOR OPERATED DAMPER WITH INTAKE AIR LOUVERS AND INTERLOCK WITH RESPECTIVE EQUIPMENT.
3. FINAL LOUVER DIMENSIONS SHALL COURSE WITH ACTUAL WALL/BRICK CONFIGURATION (IF THAT CONDITION EXISTS), CONCRETE PANEL, AND/OR WINDOW OPENINGS. COORDINATE LOUVER SIZES WITH OTHER TRADES PRIOR TO ORDERING UNITS.
4. DAMPER TO BE GREENHECK MODEL VCD-18, OR EQUAL.

UNIT HEATER SCHEDULE

MARK	MFG	MODEL	MOUNTING	SERVES	MOUNTING HEIGHT	CAPACITY BTUH	AMPS	VOLTAGE	REMARKS
TH-M1	SCHWANK	S100 45-10	CEILING	STORAGE	12 FEET	45,000	1.5	120V/1Ø	1,2
TH-M2	SCHWANK	S100 100-20	CEILING	GARAGE/SHOP	16 FEET	100,000	1.5	120V/1Ø	1,2
TH-M3	SCHWANK	S100 100-20	CEILING	GARAGE/SHOP	16 FEET	100,000	1.5	120V/1Ø	1,2
UH-M1	QMARK	WHT500	FLOOR	FIXED EQUIP STORAGE	N/A	1,708	2.1 / 4.2	240/1 / 120/1	3

NOTES:

1. PROVIDE COMBUSTION AIR DUCT AND GAS FLUE ROOF TERMINATIONS, HEAT REFLECTORS, AND DEDICATED THERMOSTAT. INSTALL WITH HARDWIRED POWER CONNECTION (REFER TO ELECTRICAL PLANS). COMPLY WITH MFG. RECOMMENDED CLEARANCES AND INSTALLATION INSTRUCTIONS.
2. UNIT SHALL BE EQUIPPED FOR USE WITH NATURAL GAS FUEL.
3. HEATING ELEMENT TO BE NON-GLOWING DESIGN W/SPECIAL RESISTANCE WIRE IN A STEEL SHEATH WITH ALUMINUM FINS MECHANICALLY CRIMPED. UNIT TO HAVE AND INTEGRAL THERMOSTAT W/ TEMP RANGE FOR 40 TO 70 DEGREES F.

NOTE: EQUIPMENT ON THIS SHEET HAS BEEN USED AS THE BASIS OF DESIGN. COMPETITIVE BIDDING IS DESIRED. ALL EQUIPMENT SUBSTITUTIONS WILL BE SUBJECT TO OWNER/ARCHITECT/ENGINEER SUBMITTAL REVIEW PROCESS TO DETERMINE AS EQUAL.

PLOT DATE: 1/31/2020 11:24 AM

CEC

CEC CORPORATION
4555 W. MEMORIAL ROAD
OKLAHOMA CITY, OKLAHOMA 73142
P: 405.752.4200
WWW.CONNECTCEC.COM

STATE OF OK CERTIFICATE OF AUTHORIZATION
CA-2576 EXP. 06/30/2020

COPYRIGHT © 2019 CEC. ALL RIGHTS RESERVED
THIS DRAWING IS PROPERTY OF CEC. ANY
INFORMATION HEREON IS TO BE KEPT PRIVATE
WITHOUT EXPRESS WRITTEN AUTHORIZATION OF
CEC OF PROHIBITED.

LICENSED PROFESSIONAL ENGINEER
Ezra Zoschke
24607
1/31/2020
OKLAHOMA

REVISION HISTORY

NO.	DESCRIPTION	DATE
1	ADDENDUM A	01/30/2020

CONSTRUCTION DOCUMENTS

SUBMITTAL:

DATE:	09/21/2018
PROJECT NO:	180131.0018.06
DESIGNED BY:	AP/EZ
DRAWN BY:	AP/EZ/BM
APPROVED BY:	ACB
SCALE:	AS SHOWN

MAINTENANCE FACILITY

DIVISION 05 - BECKHAM COUNTY

OKLAHOMA DEPARTMENT OF TRANSPORTATION

SAYRE, OKLAHOMA

SHEET NAME

MAINTENANCE MECHANICAL SCHEDULES

SHEET

MM2.1

FEEDER SCHEDULE

FEEDER AMPS	CONDUIT AND FEEDER	FEEDING THESE DEVICES
250	2"C,2#250kcmil,#250kcmil N,#4G	ATS
150	1-1/2"C,2#1/0,#1/0N,#6G	A
400	3"C,2#600kcmil,#600kcmil N,#2G	ATS, E
400	3"C,2#600kcmil,#600kcmil N	DC-1
80	1-1/4"C,2#2,#2N,#8G	P1V

SIZING METHOD: COPPER, 60°C #12 THROUGH #1, 75°C 1/0 AND ABOVE, THW INSULATION

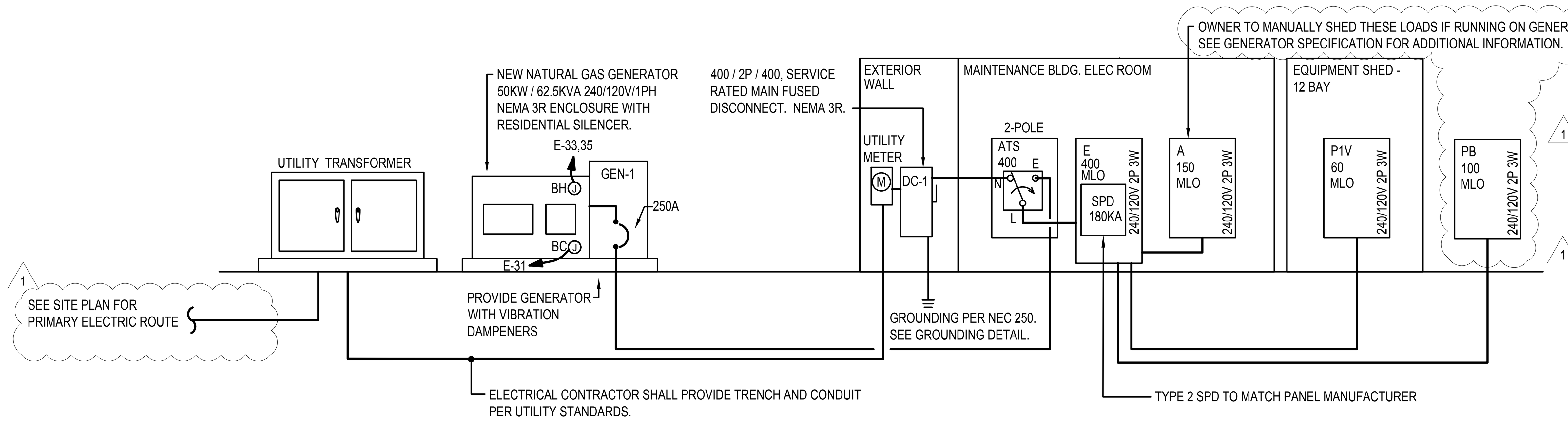

A Electrical Power Riser Diagram

SCALE : NOT TO SCALE

ELECTRIC UTILITY RESPONSIBILITY MATRIX

RESPONSIBILITY	CONTRACTOR	UTILITY
PRIMARY CONDUIT (INCLUDING RISER POLE)	X	
CONDUCTORS UP TO METER		X
TRANSFORMER		X
TRANSFORMER PAD	X	
METER BASE	I	F
METER		X
SECONDARY CONDUIT	X	
CONDUCTORS BEYOND METER	X	

NOTES:
1. X = FURNISHED & INSTALLED. F = FURNISHED, I = INSTALLED
2. CONTRACTOR SHALL BE RESPONSIBLE FOR COORDINATING WITH ELECTRIC UTILITY. CONTACT DAVID WITH NORTHFORK ELECTRIC COOPERATIVE AT 580.729.0308. COMPLY WITH ALL UTILITY STANDARDS.
3. CONTRACTOR SHALL BE RESPONSIBLE FOR COORDINATING ALL TEMPORARY POWER AND UNDERGROUND UTILITIES WITH OTHER TRADES.

E

ROOM: MECH / ELEC 113 | VOLTS: 240/120V 2P 3W | AIC: 30,000
MOUNTING: SURFACE | BUS AMPS: 400 | MAIN BKR: MLO
FED FROM: ATS | NEUTRAL: 100% | LUGS: STANDARD
NOTE:

CKT #	CKT BKR	LOAD KVA	CIRCUIT DESCRIPTION		CKT #	CKT BKR	LOAD KVA	CIRCUIT DESCRIPTION
1	20/1	0.18	GENERAL RECEPTACLE(S)	a	2	20/1	0	SPARE
3	20/1	0.18	GENERAL RECEPTACLE(S)	b	4	20/1	1.8	OVERHEAD DOOR 120
5	50/2	8.32	50A SPECIAL RECEPTACLE(S)	a	6	20/1	0.72	GENERAL RECEPTACLE(S)
7	|			b	8	20/1	0	SPARE
9	20/1	0.18	GENERAL RECEPTACLE(S)	a	10	20/1	1.3	LIGHTING
11	20/1	0.18	GENERAL RECEPTACLE(S)	b	12	20/1	1.42	LIGHTING
13	20/1	0.68	GARAGE RECEPTACLE(S), GENERAL RECEPTACLE(S)	a	14	20/1	0.348	LIGHTING
15	20/1	1	GARAGE RECEPTACLE(S)	b	16	20/1	0.648	LIGHTING
17	20/2	1.8	OVERHEAD DOOR 240	a	18	20/1	0	SPARE
19	|			b	20	20/1	0.54	TH-M1, TH-M2, TH-M3
21	100/2	0	PANEL PB	a	22	50/2	7.5	CU-M1
23	|			b	24	|		
25	20/1	0.18	GENERAL RECEPTACLE(S)	a	26	20/1	0.2	EF-M1, EF-M2
27	20/1	0.36	GENERAL RECEPTACLE(S)	b	28	20/1	0	SPARE
29	20/1	0.36	GENERAL RECEPTACLE(S)	a	30	20/1	0.36	GENERAL RECEPTACLE(S)
31	20/1	0.5	BATTERY CHARGER	b	32	20/1	0.5	EF-M3, EF-M4
33	20/2	2.5	BLOCK HEATER	a	34	20/1	1.75	F-M1
35	|			b	36	20/1	0.1	LV-M1
37	20/2	1.68	FUEL PUMP	a	38	20/1	0.5	HW CIRCULATION PUMP AND HWT CONTROLS
39	|			b	40	20/2	0.996	LIGHTING
41	20/1	0.5	UH-M1	a	42	|		
43	50/2	6.72	AIR COMPRESSOR	b	44	20/2	0.46	LIGHTING
45	|			a	46	|		
47	20/1	0.72	GENERAL RECEPTACLE(S)	b	48	20/1	0	SPARE
49	20/2	1.68	FUEL PUMP	a	50	60/2	10.2	PANEL P1V
51	|			b	52	|		
53	20/1	1	FUEL DISPENSER	a	54	150/2	0	PANEL A
55	20/1	0	SPARE	b	56	|		
57	20/2	1.8	OVERHEAD DOOR 240	a	58	60/2	0	SPD
59	|			b	60	|		

	CONN. KVA	CALC. KVA			CONN. KVA	CALC. KVA	
LIGHTING	7.41	9.26	(125%)	CONTINUOUS	4	5	(125%)
LARGEST MOTOR	7.5	9.38	(125%)	HEATING	2.5	2.5	(100%)
OTHER MOTORS	3.59	3.59	(100%)	NONCONTINUOUS	0	0	(100%)
RECEPTACLES	30.7	20.3	(50%>10)	KITCHEN EQUIP	0	0	(N/A)
				NONCOIN/DIVERSE	15	5.38	(36%)
				TOTAL KVA	70.7	55.4	

BALANCED PHASE AMPS 231
PHASE BALANCE PERCENT: PHASE A 103% PHASE B 97.1%

A

ROOM: MECH / ELEC 113 | VOLTS: 240/120V 2P 3W | AIC: 22,000
MOUNTING: FLUSH | BUS AMPS: 150 | MAIN BKR: MLO
FED FROM: E | NEUTRAL: 100% | LUGS: STANDARD
NOTE: TYPE SQUARE D NQ SERIES "TALL" PANEL OR EQUAL.

CKT #	CKT BKR	LOAD KVA	CIRCUIT DESCRIPTION		CKT #	CKT BKR	LOAD KVA	CIRCUIT DESCRIPTION
1	20/1	0.54	GENERAL RECEPTACLE(S)	a	2	20/1	0.9	GENERAL RECEPTACLE(S)
3	20/1	0.36	GENERAL RECEPTACLE(S)	b	4	20/1	0.36	GENERAL RECEPTACLE(S)
5	20/1	0.18	GENERAL RECEPTACLE(S)	a	6	20/1	0.54	GENERAL RECEPTACLE(S)
7	20/1	0.18	GENERAL RECEPTACLE(S)	b	8	20/1	0.36	GENERAL RECEPTACLE(S)
9	20/1	0.18	GENERAL RECEPTACLE(S)	a	10	20/1	0.36	GENERAL RECEPTACLE(S)
11	20/1	0.36	GENERAL RECEPTACLE(S)	b	12	20/1	0.36	GENERAL RECEPTACLE(S)
13	20/1	0.68	GARAGE RECEPTACLE(S), GENERAL RECEPTACLE(S)	a	14	20/1	0.36	GENERAL RECEPTACLE(S)
15	20/1	0	SPARE	b	16	20/1	0.18	GENERAL RECEPTACLE(S)
17	20/1	0	SPARE	a	18	20/1	0.18	GENERAL RECEPTACLE(S)
19	20/1	0.68	GARAGE RECEPTACLE(S), GENERAL RECEPTACLE(S)	b	20	20/1	0.5	(GFCI CB) ELECTRIC WATER COOLER
21	20/1	1	GARAGE RECEPTACLE(S)	a	22	20/1	0.18	GENERAL RECEPTACLE(S)
23	20/1	0.5	GARAGE RECEPTACLE(S)	b	24	20/1	0	SPARE
25	20/1	0	SPARE	a	26	20/1	0	SPARE
27	20/1	1	GARAGE RECEPTACLE(S)	b	28	20/1	0.54	EXTERIOR RECEPTACLE(S)
29	20/1	1	GARAGE RECEPTACLE(S)	a	30	20/1	0.36	EXTERIOR RECEPTACLE(S)
31	20/1	0	SPARE	b	32	20/1	0.36	EXTERIOR RECEPTACLE(S)
33	20/1	0	SPARE	a	34	20/1	0	SPARE
35	20/1	0	SPARE	b	36	20/1	0	SPARE
37	20/1	0	SPARE	a	38	20/1	0	SPARE
39	20/1	0	SPARE	b	40	20/1	0	SPARE
41	20/1	0	SPARE	a	42	20/1	0	SPARE

	CONN. KVA	CALC. KVA			CONN. KVA	CALC. KVA	
LIGHTING	0	0	(125%)	CONTINUOUS	0	0	(125%)
LARGEST MOTOR	0	0	(125%)	HEATING	0	0	(100%)
OTHER MOTORS	0	0	(100%)	NONCONTINUOUS	0	0	(100%)
RECEPTACLES	12.2	11.1	(50%>10)	KITCHEN EQUIP	0	0	(N/A)
				NONCOIN/DIVERSE	0	0	(N/A)
				TOTAL KVA	12.2	11.1	

BALANCED PHASE AMPS 46.3
PHASE BALANCE PERCENT: PHASE A 106% PHASE B 94.1%

P1V

ROOM: | VOLTS: 240/120V 2P 3W | AIC: 10,000
MOUNTING: SURFACE | BUS AMPS: 60 | MAIN BKR: MLO
FED FROM: E | NEUTRAL: 100% | LUGS: STANDARD
NOTE: EQUIPMENT SHED

CKT #	CKT BKR	LOAD KVA	CIRCUIT DESCRIPTION		CKT #	CKT BKR	LOAD KVA	CIRCUIT DESCRIPTION
1	20/1	1.8	OVERHEAD DOOR 120	a	2	20/1	0.18	EXTERIOR RECEPTACLE(S)
3	20/1	0.5	TUBE HEATER	b	4	20/1	0.18	EXTERIOR RECEPTACLE(S)
5	20/1	0.5	TUBE HEATER	a	6	20/1	0.18	EXTERIOR RECEPTACLE(S)
7	20/1	1.8	OVERHEAD DOOR 120	b	8	20/1	0.18	EXTERIOR RECEPTACLE(S)
9	20/1	1.75	LIGHTING	a	10	20/1	0.18	EXTERIOR RECEPTACLE(S)
11	20/1	0.36	EXTERIOR RECEPTACLE(S)	b	12	20/1	0.18	EXTERIOR RECEPTACLE(S)
13	20/1	0.36	EXTERIOR RECEPTACLE(S)	a	14	20/1	0.18	EXTERIOR RECEPTACLE(S)
15	20/1	1.2	EXT. BRINE PUMP EXT. BRINE PUMP	b	16	20/1	0.18	EXTERIOR RECEPTACLE(S)
17	20/1	0	SPARE	a	18	20/1	0.486	LIGHTING
19	20/1	0	SPARE	b	20	20/1	0	SPARE
21	20/1	0	SPARE	a	22	20/1	0	SPARE
23	20/1	0	SPARE	b	24	20/1	0	SPARE
25	20/1	0	SPARE	a	26	20/1	0	SPARE
27	20/1	0	SPARE	b	28	20/1	0	SPARE
29	20/1	0	SPARE	a	30	20/1	0	SPARE

	CONN. KVA	CALC. KVA			CONN. KVA	CALC. KVA	
LIGHTING	2.24	2.8	(125%)	CONTINUOUS	1	1.25	(125%)
LARGEST MOTOR	0	0	(125%)	HEATING	0	0	(100%)
OTHER MOTORS	0	0	(100%)	NONCONTINUOUS	0	0	(100%)
RECEPTACLES	6.96	6.96	(50%>10)	KITCHEN EQUIP	0	0	(N/A)
				NONCOIN/DIVERSE	0	0	(N/A)
				TOTAL KVA	10.2	11	

BALANCED PHASE AMPS 45.9
PHASE BALANCE PERCENT: PHASE A 110% PHASE B 89.8%

NEMA 3R ENCLOSURE.

PB

ROOM: EXTERIOR BRINE PAD | VOLTS: 240/120V 2P 3W | AIC: 10,000
MOUNTING: SURFACE | BUS AMPS: 100 | MAIN BKR: MLO
FED FROM: E | NEUTRAL: 100% | LUGS: STANDARD
NOTE: NEMA 3R ENCLOSURE

CKT #	CKT BKR	LOAD KVA	CIRCUIT DESCRIPTION		CKT #	CKT BKR	LOAD KVA	CIRCUIT DESCRIPTION
1	30/2	5.7	BRINE PUMP	a	2	20/1	0.18	GENERAL RECEPTACLE(S)
3	|			b	4	20/1	0	SPARE
5	20/1	0	SPARE	a	6	20/1	0	SPARE
7	20/1	0	SPARE	b	8	20/1	0	SPARE

	CONN. KVA	CALC. KVA			CONN. KVA	CALC. KVA	
LIGHTING	0	0	(125%)	CONTINUOUS	0	0	(125%)
LARGEST MOTOR	0	0	(125%)	HEATING	0	0	(100%)
OTHER MOTORS	5.7	5.7	(100%)	NONCONTINUOUS	0	0	(100%)
RECEPTACLES	0.18	0.18	(50%>10)	KITCHEN EQUIP	0	0	(N/A)
				NONCOIN/DIVERSE	0	0	(N/A)
				TOTAL KVA	5.88	5.88	

BALANCED PHASE AMPS 24.5
PHASE BALANCE PERCENT: PHASE A 103% PHASE B 96.9%

FAULT CURRENT SCHEDULE

DEVICE	FAULT	AIC RATING	L-N VOLTS	UTILITY			FED FROM				FEEDER						TRANSFORMER						TOTAL MOTOR	DIRECTLY CONNECTED MOTOR LOAD			
				FAULT	X	R	DEVICE	FAULT	X	R	SIZE	X / 1000'	R / 1000'	LENGTH	X	R	KVA	Z%	XR RATIO	FAULT AT PRIMARY	X	R	FAULT	KVA	FAULT	X	R
GEN-1	30,275		120V	30,000	0.003922	0.0007845																	275				
UTILITY XFMR	18,129	22,000	120V	17,856	0.00659	0.001318											75	1.75	5	UTILITY	0.00659	0.001318	273				
DC-1	12,092	22,000	120V	11,817	0.009661	0.003129	UTILITY XFMR	17,856	0.00659	0.001318	#600kcmil	0.039	0.023	79'	0.0031	0.0018							275				
ATS	23,337	30,000	120V	23,061	0.00483	0.001936	DC-1 / GEN-1	11,817 / 30,000	0.009661 / 0.003922	0.003129 / 0.0007845	#600kcmil / #250kcmil	0.039 / 0.041	0.023 / 0.052	24' / 22'	0.0009 / 0.0009	0.0005 / 0.0012							276				
E	20,836	30,000	120V	20,559	0.005381	0.002261	ATS	23,061	0.00483	0.001936	#600kcmil	0.039	0.023	14'	0.0006	0.0003							277	11.1	185	0.6298	0.1575
A	15,981	22,000	120V	15,818	0.00617	0.004413	E	20,559	0.005381	0.002261	#1/0	0.044	0.12	18'	0.0008	0.0022							163				
P1V	3,636	10,000	120V	3,629	0.01213	0.03076	E	20,559	0.005381	0.002261	#2	0.045	0.19	150'	0.0068	0.0285							7				
PB	1,485	22,000	120V	1,389	0.02958	0.08116	E	20,559	0.005381	0.002261	#1	0.046	0.15	526'	0.0242	0.0789							96	5.7	95	1.225	0.3064

PLOT DATE: 1/30/2020 11:26 AM

CEC
CEC CORPORATION
4555 W. MEMORIAL ROAD
OKLAHOMA CITY, OKLAHOMA 73142
P: 405.753.4200
WWW.CONNECTCEC.COM
STATE OF OK CERTIFICATE OF AUTHORIZATION CA#: 32 EXPIRES: 2020-06-30

COPYRIGHT © 2018 CEC. ALL RIGHTS RESERVED. THIS DRAWING IS PROPERTY OF CEC. ANY MODIFICATION OR USE OF THIS DRAWING WITHOUT EXPRESS WRITTEN AUTHORIZATION OF CEC IS PROHIBITED.

LICENSED PROFESSIONAL ENGINEER
ANDREW J. PRITCHARD
27484
01/30/20
OKLAHOMA

REVISION HISTORY

NO.	DESCRIPTION	DATE
1	ADDENDUM A	01/30/2020

SUBMITTAL:	CONSTRUCTION DOCUMENTS
DATE:	09/21/2018
PROJECT NO:	180131.0018.06
DESIGNED BY:	AP/EZ
DRAWN BY:	AP/EZ/BM
APPROVED BY:	ACB
SCALE:	AS SHOWN

MAINTENANCE FACILITY
DIVISION 05 - BECKHAM COUNTY
OKLAHOMA DEPARTMENT OF TRANSPORTATION
SAYRE, OKLAHOMA

SHEET NAME
ELECTRICAL RISER& SCHEDULES

SHEET
ME0.2

LUMINAIRE SCHEDULE

CALLOUT	SYMBOL	LAMP	DESCRIPTION	MOUNTING	VOLTS	MANUFACTURER	CATALOG NUMBER	GENERAL NOTES
A		(1) 57W LED/4000K	2X4 LED TROFFER	RECESSED	120V 1P 2W	LSI LIGHTING	GA24 LED HO NW UE	PROVIDE FLANGE KIT AS REQUIRED.
AA1		230W LED/4000K	LED POLE LIGHT - SINGLE HEAD WITH ADJUSTABLE BRACKET	CONCRETE POLE BASE	240V 2P 2W	GE LIGHTING	EALS02 0 J4 AF 740 N A S1 BLCK R	5-FT AFG, CONCRETE POLE BASE. 23-FT SQUARE STRAIGHT STEEL POLE WITH 2.5IN-3IN TENON MOUNT.
AA4		137W LED/4000K	LED POLE LIGHT - SINGLE HEAD	CONCRETE POLE BASE	240V 2P 2W	GE LIGHTING	EALS02 0 F4 AF 740 N A D1 BLCK R	3-FT AFG, CONCRETE POLE BASE. 23-FT SQUARE STRAIGHT STEEL POLE.
B		(1) 58W LED/4000K	LED WRAP	SUSPENDED	120V 1P 2W	LSI LIGHTING	DW LED HO NW UE CHSIMX5	PROVIDE WITH CHAIN KIT / MOUNTING AS REQUIRED.
1 BA		125W LED	FUEL HIGH BAY - CORROSION RESISTANT	STEM	240V 2P 2W	GE LIGHTING	ABR1 0 2T 47 1 N N 23 A N R	PENDANT MOUNT APPROX 1' FROM STRUCTURE.
BB		125W LED	SHED HIGH BAY - CORROSION RESISTANT	YOKE	120V 1P 2W	GE LIGHTING	ABR1 0 2T 47 1 N N RB A N R	MOUNT BRACKET TO STRUCTURE, ROTATE FIXTURE TO AIM STRAIGHT DOWN.
C		(1) 95W LED/4000K	LED HIGHBAY	SUSPENDED	120V 1P 2W	GE LIGHTING	ABV1 0 1 V 47 1 N V 43 B N W	PROVIDE MOUNTING AS REQUIRED.
D		22W LED/4000K	6-INCH LED CAN LIGHT	RECESSED	120V 1P 2W	DMF LIGHTING	LD6 16 N 10 LD6 16 DL 40 D	
EM2		(2) 12W LED	EMERGENCY LED LIGHT	WALL	120V 1P 2W	MULE LIGHTING	MRD-HO 6 27 12W SD	
L		81W LED/4000K	LED WALLPACK -8500LMS	WALL	120V 1P 2W	COOPER LUMARK LIGHTING	XTOR8B W BZ	MOUNT AT 12' AFF UNLESS OTHERWISE NOTED
LE		81W LED/4000K	LED WALLPACK WITH BATTERY BACKUP	WALL	120V 1P 2W	COOPER LUMARK LIGHTING	XTOR8B W BRZ CWB	MOUNT AT 12' AFF UNLESS OTHERWISE NOTED
N		43W LED/4000K	LED WALL MOUNT	WALL	120V 1P 2W	LSI LIGHTING	W444 LED HO NW UE	MOUNTING AS REQUIRED.
X1		(1) 10W LED	EXIT SIGN	UNIVERSAL	120V 1P 2W	MULE LIGHTING	MXBRU SD	PROVIDE FACES AND ARROWS AS REQUIRED.

GENERAL NOTES:
1. COORDINATE FINAL MOUNTING HEIGHTS OF LIGHTING FIXTURES WITH ARCHITECT PRIOR TO ROUGH-IN.
1 2. EQUAL FIXTURE SUBSTITUTIONS WILL BE REVIEWED DURING SUBMITTALS. NO PRE-APPROVAL REQUIRED DURING BIDDING.

PLOT DATE: 1/30/2020 11:29 AM

CEC

CEC CORPORATION
4500 W. MEMORIAL ROAD
OKLAHOMA CITY, OKLAHOMA 73142
405.840.4300
WWW.CONNECTCEC.COM
STATE OF OK CERTIFICATE OF AUTHORIZATION
E-2372 EXPIRES: 31-DEC-2020

COPYRIGHT © 2019 CEC. ALL RIGHTS RESERVED.
THIS DRAWING IS PROPERTY OF CEC. ANY
REPRODUCTION OR USE OF THIS DRAWING
WITHOUT EXPRESS WRITTEN AUTHORIZATION OF
CEC IS PROHIBITED.

LICENSED PROFESSIONAL ENGINEER
ANDREW J. PRITCHARD
27484
01/30/20
OKLAHOMA

REVISION HISTORY

NO.	DESCRIPTION	DATE
1	ADDENDUM A	01/30/2020

SUBMITTAL:	CONSTRUCTION DOCUMENTS
DATE:	09/21/2018
PROJECT NO:	180131.0018.06
DESIGNED BY:	AP/EZ
DRAWN BY:	AP/EZ/BM
APPROVED BY:	ACB
SCALE:	AS SHOWN

MAINTENANCE FACILITY
DIVISION 05 - BECKHAM COUNTY
OKLAHOMA DEPARTMENT OF TRANSPORTATION
SAYRE, OKLAHOMA

SHEET NAME
ELECTRICAL SCHEDULES

SHEET
ME0.3

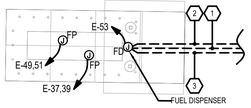

N

B **Enlarged Fueling Station**

SCALE : 1" = 20'-0"

GENERAL FUELING EQUIPMENT NOTES:

A. DIVIDED TANK. TWO FUEL PUMPS REQUIRED.
B. E.C. SHALL PROVIDE AND INSTALL MOTOR RATED SWITCHES , CONTROLS , CONNECTIONS, OVER-CURRENT PROTECTION DEVICES, CONDUIT, CONDUCTORS, SEAL-OFFS, GROUNDING, AND OTHER NECESSARY APPURTENANCES REQUIRED TO PROVIDE A COMPLETE AND OPERATIONAL SYSTEM.
C. E.C. SHALL COORDINATE FINAL REQUIREMENTS WITH FUELING CONTRACTOR AND OWNER PRIOR TO ROUGH-IN AND PURCHASE OF EQUIPMENT.
D. ROUTE ALL POWER TO FUELING STATION VIA CONTRACTOR PANEL LOCATED IN MAINTENANCE BUILDING ELECTRICAL ROOM. ALL POWER TO FUELING STATION SHALL BE SIMULTANEOUSLY DISCONNECTED UPON ACTIVATION OF ANY EPO SWITCH. (1)

FUELING EQUIPMENT NOTES:

1. 1"C. WITH PULL STRING FOR FUTURE FUEL LEVEL MONITORING SYSTEM DATA CABLING. ROUTE TO MAINTENANCE FACILITY AS REQUIRED.
2. 1"C. WITH CAT 5E CABLE FOR FUEL SYSTEM COMMUNICATIONS. COORDINATE TERMINATION WITH FUEL EQUIPMENT CONTRACTOR AND OWNER. CABLE SHALL BE LISTED FOR THE ENVIRONMENT IN WHICH IT IS INSTALLED . ROUTE TO MAINTENANCE FACILITY AS REQUIRED.
3. 1"C. WITH PULL STRING FOR FUTURE CARD READER. ROUTE TO MAINTENANCE FACILITY AS REQUIRED.
4. EMERGENCY POWER OFF (EPO) SWITCH WITH WEATHERPROOF COVER. ROUTE 1"C BACK TO MAINTENANCE BUILDING ELECTRICAL ROOM. (1)

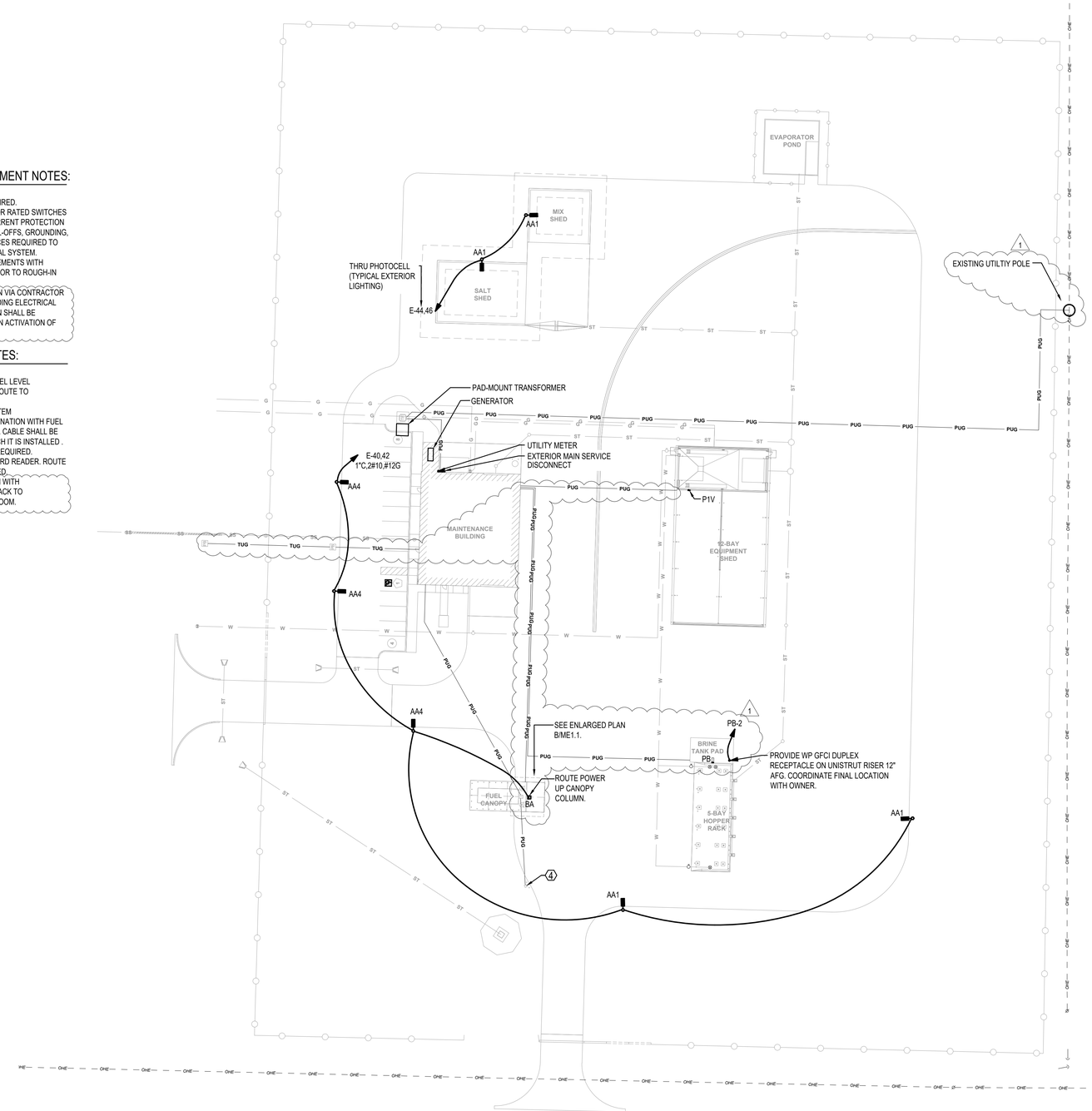

N

A **Electrical Site Plan**

SCALE : 1" = 40'-0"

PLOT DATE: 1/30/2020 11:29 AM

CEC

CEC CORPORATION
4500 W. MEMORIAL ROAD
OKLAHOMA CITY, OKLAHOMA 73142
(405) 842-8355
WWW.CONNECTCEC.COM
STATE OF OK CERTIFICATE OF AUTHORIZATION
CA-1456 EXP. 06/30/2020

COPYRIGHT © 2019 CEC, ALL RIGHTS RESERVED.
THIS DRAWING IS PROPERTY OF CEC. ANY REPRODUCTION OR USE OF THIS DRAWING WITHOUT EXPRESS WRITTEN AUTHORIZATION OF CEC IS PROHIBITED.

LICENSED PROFESSIONAL ENGINEER
ANDREW J. PRITCHARD
27484
01/30/20
OKLAHOMA

REVISION HISTORY

NO.	DESCRIPTION	DATE
1	ADDENDUM A	01/30/2020

SUBMITTAL:	CONSTRUCTION DOCUMENTS
DATE:	09/21/2018
PROJECT NO:	180131.0018.06
DESIGNED BY:	AP/EZ
DRAWN BY:	AP/EZ/BM
APPROVED BY:	ACB
SCALE:	AS SHOWN

MAINTENANCE FACILITY

DIVISION 05 - BECKHAM COUNTY
OKLAHOMA DEPARTMENT OF TRANSPORTATION

SAYRE, OKLAHOMA

SHEET NAME

ELECTRICAL SITE PLAN

SHEET

ME1.1

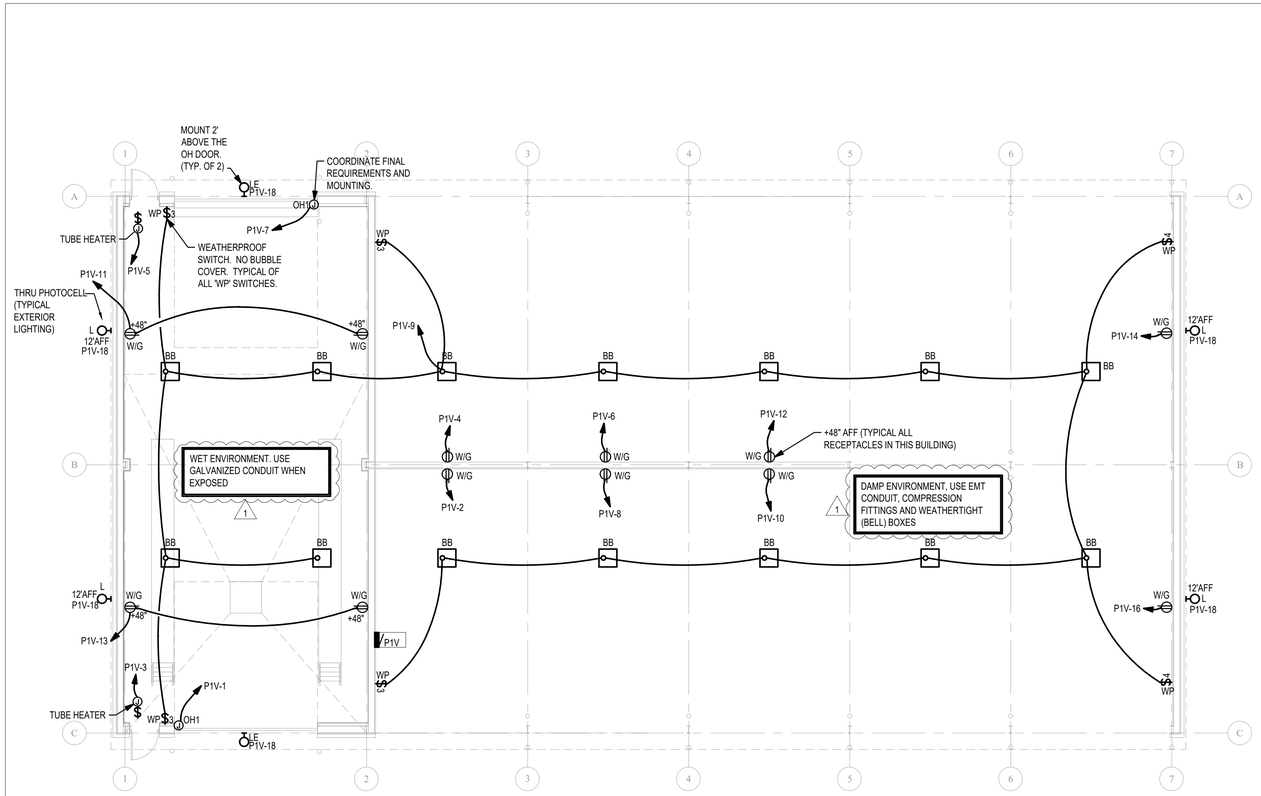

N B Electrical Plan - Equipment Shed

SCALE : 1/8" = 1'-0"

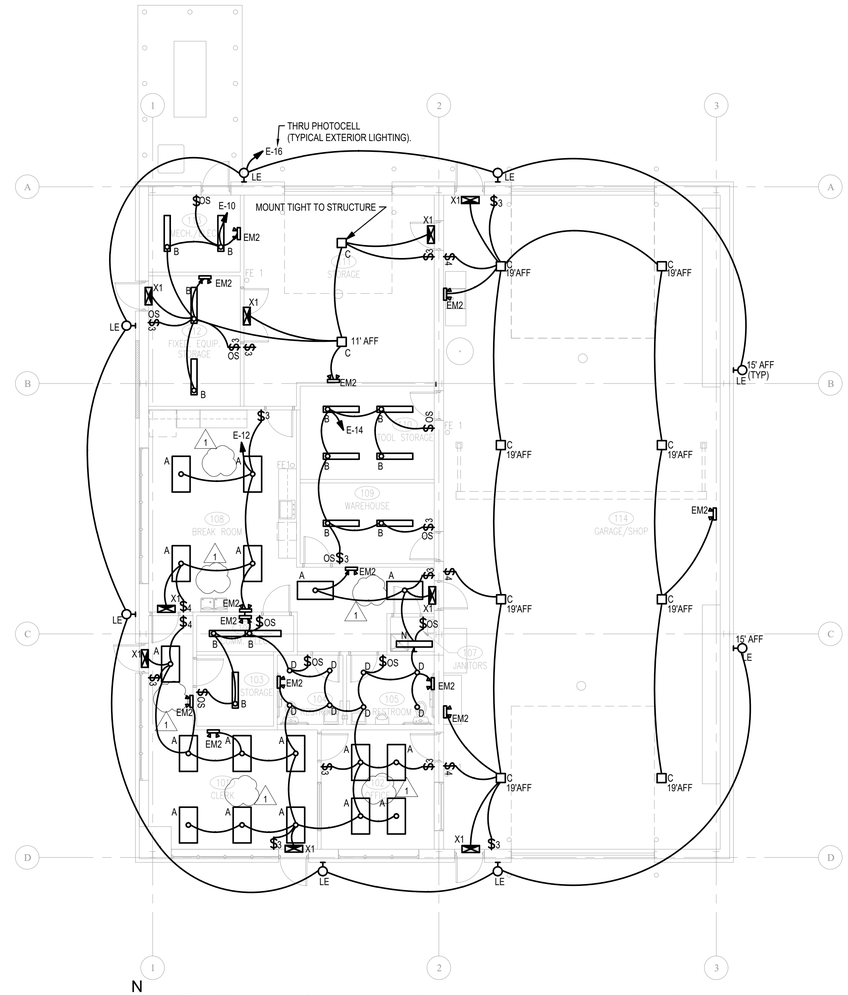

N A Electrical Lighting Plan - Maintenance Facility

SCALE : 1/8" = 1'-0"

WALL SWITCH SCHEDULE

CALLOUT	SYMBOL	DESCRIPTION	GENERAL NOTES
3-WAY TOGGLE SWITCH	$3	120/277V 20A - COMMERCIAL GRADE TOGGLE SWITCH	GRAY DEVICE AND STAINLESS STEEL COVER PLATE.
4-WAY TOGGLE SWITCH	$4	120/277V 20A - COMMERCIAL GRADE TOGGLE SWITCH	GRAY DEVICE AND STAINLESS STEEL COVER PLATE.
OCCUPANCY SENSOR - WALL	$OS	120V 20A - TYPE WALL MOUNTED DUAL-TECHNOLOGY SENSOR	INITIAL PROGRAM INSTALL TO BE AUTO-ON AND AUTO-OFF IN 10-MINUTES. GRAY DEVICE AND STAINLESS STEEL COVER PLATE.
SINGLE-POLE TOGGLE SWITCH	$	120/277V 20A - COMMERCIAL GRADE TOGGLE SWITCH	GRAY DEVICE AND STAINLESS STEEL COVER PLATE.

PLOT DATE: 1/30/2020 11:30 AM

CEC

CEC CORPORATION
4555 W. MEMORIAL ROAD
OKLAHOMA CITY, OKLAHOMA 73142
(405) 359-0000
WWW.CONNECTCEC.COM

STATE OF OK CERTIFICATE OF AUTHORIZATION
CA-2484 EXPIRES 06/30/2020

COPYRIGHT © 2019 CEC, INC. ALL RIGHTS RESERVED.
THIS DRAWING IS PROPERTY OF CEC. ANY REPRODUCTION OR USE FOR OTHER PURPOSES WITHOUT EXPRESS WRITTEN AUTHORIZATION OF CEC IS PROHIBITED.

LICENSED PROFESSIONAL ENGINEER
ANDREW J. PRITCHARD
27484
01/30/20
OKLAHOMA

REVISION HISTORY

NO.	DESCRIPTION	DATE
1	ADDENDUM A	01/30/2020

SUBMITTAL:	CONSTRUCTION DOCUMENTS
DATE:	09/21/2018
PROJECT NO:	180131.0018.06
DESIGNED BY:	AP/EZ
DRAWN BY:	AP/EZ/BM
APPROVED BY:	ACB
SCALE:	AS SHOWN

MAINTENANCE FACILITY
DIVISION 05 - BECKHAM COUNTY
OKLAHOMA DEPARTMENT OF TRANSPORTATION
SAYRE, OKLAHOMA

SHEET NAME
ELECTRICAL LIGHTING PLAN

SHEET
ME2.1

POWER RECEPTACLE SCHEDULE

CALLOUT	SYMBOL	NEMA	VOLTS	DESCRIPTION	GENERAL NOTES	
50A RECEPTACLE		6-50R	240V 2P 2W	COMMERCIAL GRADE 250V/50A RECEPTACLE.	GRAY DEVICE AND STAINLESS STEEL COVER PLATE.	1
ABOVE COUNTER GFCI DUPLEX RECEPTACLE	G/A	5-20R	120V 1P 2W	COMMERCIAL GRADE 125V/20A GFCI RECEPTACLE.	MOUNT AT 42-INCHES ABOVE FINISHED FLOOR. GRAY DEVICE AND STAINLESS STEEL COVER PLATE.	
BATTERY CHARGER	BC		120V 1P 2W	4-INCH X 4-INCH JBOX AND 0.75-INCH CONDUIT.	COORDINATE WITH GENERATOR PROVIDER FOR EXACT ELECTRICAL REQUIREMENTS. E.C. SHALL ADJUST FINAL WIRE SIZE, CONDUIT SIZE, BREAKER SIZES, AND OTHER ASSOCIATED DEVICES TO PROVIDE A COMPLETE AND OPERATIONAL SYSTEM PER MANUFACTURERS RECOMMENDATIONS. INCLUDE COSTS IN BASE BID.	
BLOCK HEATER	BH		240V 2P 2W	4-INCH X 4-INCH JBOX AND 0.75-INCH CONDUIT.	COORDINATE WITH GENERATOR PROVIDER FOR EXACT ELECTRICAL REQUIREMENTS. E.C. SHALL ADJUST FINAL WIRE SIZE, CONDUIT SIZE, BREAKER SIZES, AND OTHER ASSOCIATED DEVICES TO PROVIDE A COMPLETE AND OPERATIONAL SYSTEM PER MANUFACTURERS RECOMMENDATIONS. INCLUDE COSTS IN BASE BID.	
DUPLEX RECEPTACLE		5-20R	120V 1P 2W	COMMERCIAL GRADE 125V/20A RECEPTACLE.	GRAY DEVICE AND STAINLESS STEEL COVER PLATE.	1
ELECTRIC WATER COOLER RECEPTACLE	EWC	5-20R	120V 1P 2W	COMMERCIAL GRADE 125V/20A DUPLEX RECEPTACLE.	FEED THRU GFCI CIRCUIT BREAKER. COORDINATE AND MOUNT BEHIND EWC. GRAY DEVICE AND STAINLESS STEEL COVER PLATE.	
FUEL DISPENSER	FD	N/A	120V 1P 2W	4-INCH X 4-INCH EXPLOSION PROOF JBOX AND 0.75-INCH GRC CONDUIT.	COORDINATE POWER CONNECTION REQUIREMENTS WITH FUELING CONTRACTOR PRIOR TO ROUGH-IN AND PURCHASE OF EQUIPMENT. E.C. SHALL PROVIDE AND INSTALL CONDUIT, CONDUCTORS, CONTROLS, CONNECTIONS, DISCONNECTING MEANS, AND OTHER NECESSARY APPURTENANCES AS REQUIRED TO PROVIDE A COMPLETE AND OPERATIONAL FUELING SYSTEM IN ACCORDANCE WITH MANUFACTURER'S RECOMMENDATIONS. INCLUDE COSTS IN BASE BID.	
FUEL PUMP	FP	N/A	240V 2P 2W	4-INCH X 4-INCH EXPLOSION PROOF JBOX AND 0.75-INCH GRC CONDUIT.	COORDINATE POWER CONNECTION REQUIREMENTS WITH FUELING CONTRACTOR PRIOR TO ROUGH-IN AND PURCHASE OF EQUIPMENT. E.C. SHALL PROVIDE AND INSTALL CONDUIT, CONDUCTORS, CONTROLS, CONNECTIONS, DISCONNECTING MEANS, AND OTHER NECESSARY APPURTENANCES AS REQUIRED TO PROVIDE A COMPLETE AND OPERATIONAL FUELING SYSTEM IN ACCORDANCE WITH MANUFACTURER'S RECOMMENDATIONS. INCLUDE COSTS IN BASE BID.	
GARAGE GFCI DUPLEX RECEPTACLE	G	5-20R	120V 1P 2W	COMMERCIAL GRADE 125V/20A GFCI RECEPTACLE. MOUNTED AT 48" AFF.	GRAY DEVICE AND STAINLESS STEEL COVER PLATE.	1
GFCI DUPLEX RECEPTACLE	G	5-20R	120V 1P 2W	COMMERCIAL GRADE 125V/20A GFCI RECEPTACLE.	GRAY DEVICE AND STAINLESS STEEL COVER PLATE.	
HOT WATER CONTROL AND CIRC. PUMP POWER	+72, HW	5-20R	120V 1P 2W	COMMERCIAL GRADE 125V/20A RECEPTACLE.	MOUNT AT 72-INCH AFF. GRAY DEVICE AND STAINLESS STEEL COVER PLATE.	
OVERHEAD DOOR 120	OH1		120V 1P 2W	4-INCH X 4-INCH JBOX AND 0.75-INCH CONDUIT.	COORDINATE WITH OVERHEAD CONTRACTOR FOR POWER REQUIREMENTS. ADJUST POWER CONNECTIONS AS REQUIRED. PROVIDE CONRTOLS, BOXES, CONDUIT, AND OTHER APPURTENANCES AS REQUIRED. CONTROLS SHALL BE INSTALLED IN WATERPROOF NEMA 4X BOX IN WASHBAY AREA.	
OVERHEAD DOOR 240	OH2		240V 2P 2W	4-INCH X 4-INCH JBOX AND 0.75-INCH CONDUIT.	COORDINATE WITH OVERHEAD CONTRACTOR FOR POWER REQUIREMENTS. ADJUST POWER CONNECTIONS AS REQUIRED. PROVIDE CONRTOLS, BOXES, CONDUIT, AND OTHER APPURTENANCES AS REQUIRED. CONTROLS SHALL BE INSTALLED IN WATERPROOF NEMA 4X BOX IN WASHBAY AREA.	
QUADPLEX RECEPTACLE		5-20R	120V 1P 2W	COMMERCIAL GRADE 125V/20A RECEPTACLES.	GRAY DEVICE AND STAINLESS STEEL COVER PLATE.	1
TUBE HEATER		N/A	120V 1P 2W	4-INCH X 4-INCH JBOX AND 0.75-INCH CONDUIT WITH A 120V/20A SINGLE POLE SWITCH.	VERIFY FINAL PLACEMENT OF JUNCTION BOX WITH SUCCESSFUL MANUFACTURER.	
WEATHER-PROOF GFCI DUPLEX RECEPTACLE	W/G	5-20R	120V 1P 2W	COMMERCIAL GRADE 125V/20A WEATHER RESISTANT GFCI RECEPTACLE WITH WATERPROOF WHILE-IN-USE COVER.	GRAY DEVICE AND STAINLESS STEEL COVER PLATE.	1
WIRELESS CONNECTION POINT	WC	N/A	120V 1P 2W	4-INCH X 4-INCH JBOX AND 0.75-INCH CONDUIT.	COORDINATE WITH OWNER PROVIDED WIRELESS DEVICES FOR INSTALLATION REQUIREMENTS OF POWER CONNECTION TO WIRELESS DEVICES.	

LOW-VOLTAGE DATA SCHEDULE

CALLOUT	SYMBOL	DESCRIPTION	GENERAL NOTES
TELE/DATA OUTLET		PROVIDE AND INSTALL 4X4 BACK-BOX WITH 2X4 MUD-RING WITH 3/4-INCH CONDUIT STUB-UP TO ACCESSABLE SPACE WITH PULL-STRING AND BUSHING.	FACEPLATE AND WIRING BY OTHERS.
TELE/DATA OUTLET - ABOVE COUNTER	A	PROVIDE AND INSTALL 4X4 BACK-BOX WITH 2X4 MUD-RING WITH 3/4-INCH CONDUIT STUB-UP TO ACCESSABLE SPACE WITH PULL-STRING AND BUSHING.	FACEPLATE AND WIRING BY OTHERS. MOUNT AT 42-INCHES AFF.

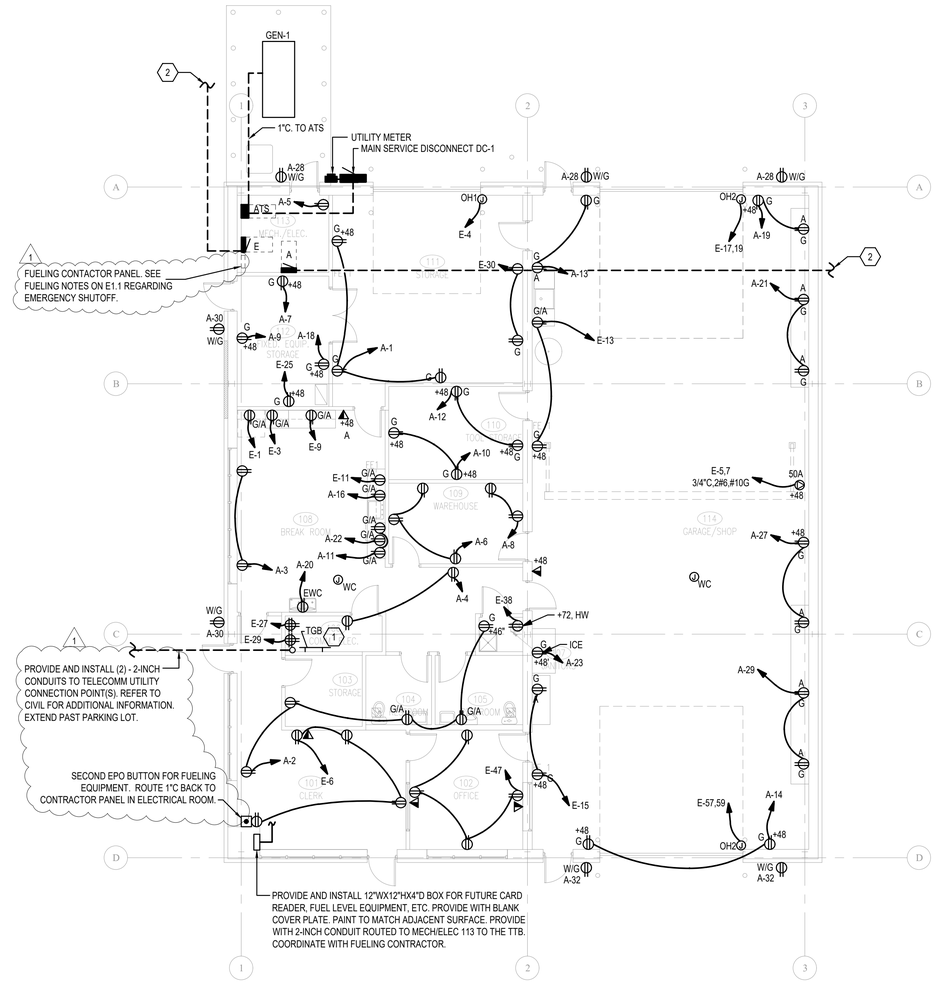

N

A Electrical Power Plan - Maintenance Facility

SCALE : 1/8" = 1'-0"

ELECTRICAL POWER NOTES:

1. 24" X 4" X 1/4" TELECOM GROUND BAR. ROUTE #6 INSULATED COPPER CONDUCTOR BACK TO GROUNDING ELECTRODE SYSTEM.
2. PROVIDE (2) SPARE 1" CONDUITS FROM INDICATED ELECTRICAL PANEL TO NON-PAVED AREA AT LEAST 5FT OUTSIDE THE BUILDING. CAP UNDERGROUND AND MARK WITH MAGNETIC MARKING TAPE.

PLOT DATE: 1/30/2020 11:30 AM

CEC

CEC CORPORATION
4500 W. MEMORIAL ROAD
OKLAHOMA CITY, OKLAHOMA 73142
(405) 840-4500
WWW.CONNECTCEC.COM

STATE OF OK CERTIFICATE OF AUTHORIZATION
CA-1456 EXPIRES JUNE 30, 2020

COPYRIGHT © 2019 CEC, ALL RIGHTS RESERVED.
THIS DRAWING IS PROPERTY OF CEC. ANY REPRODUCTION OR USE FOR OTHER PURPOSES WITHOUT EXPRESS WRITTEN AUTHORIZATION OF CEC IS PROHIBITED.

LICENSED PROFESSIONAL ENGINEER
ANDREW J. PRITCHARD
27484
01/30/20
OKLAHOMA

REVISION HISTORY

NO.	DESCRIPTION	DATE
1	ADDENDUM A	01/30/2020

SUBMITTAL:	CONSTRUCTION DOCUMENTS
DATE:	09/21/2018
PROJECT NO:	180131.0018.06
DESIGNED BY:	AP/EZ
DRAWN BY:	AP/EZ/BM
APPROVED BY:	ACB
SCALE:	AS SHOWN

MAINTENANCE FACILITY
DIVISION 05 - BECKHAM COUNTY
OKLAHOMA DEPARTMENT OF TRANSPORTATION
SAYRE, OKLAHOMA

SHEET NAME
ELECTRICAL POWER PLAN

SHEET
ME3.1

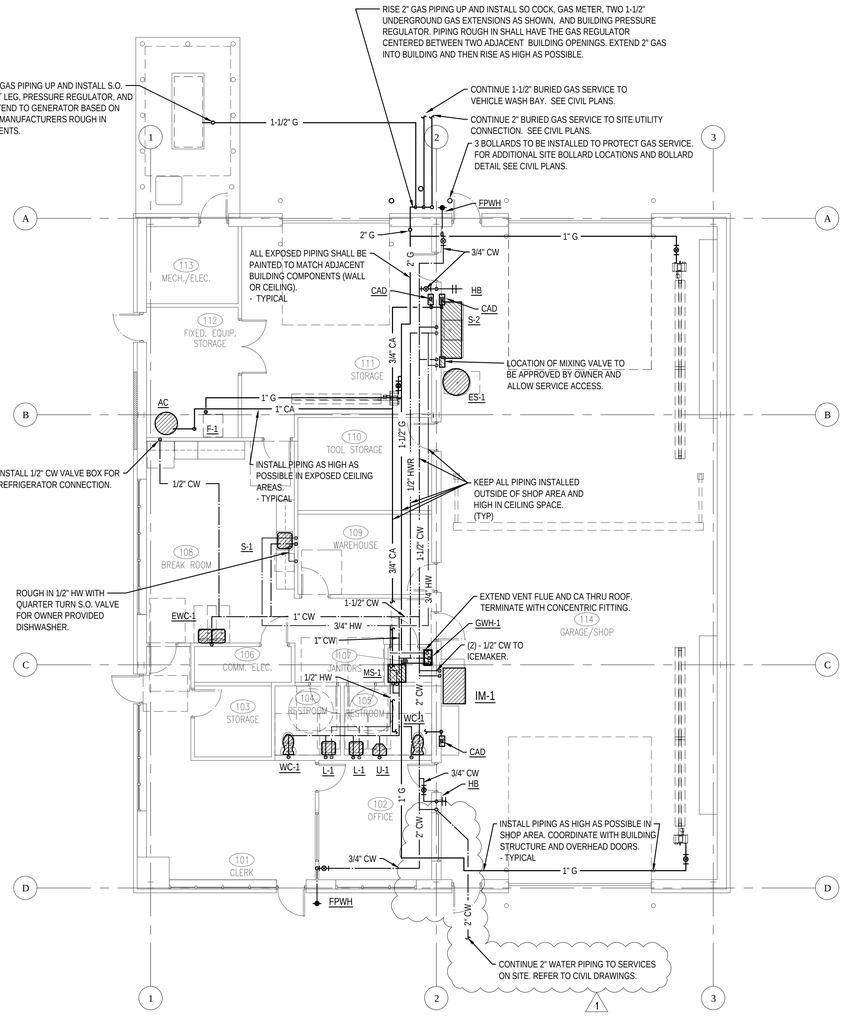

SEE CIVIL PLAN FOR TRUE NORTH

A Plumbing Plan - Maintenance Building

SCALE : 1/8" = 1'-0"

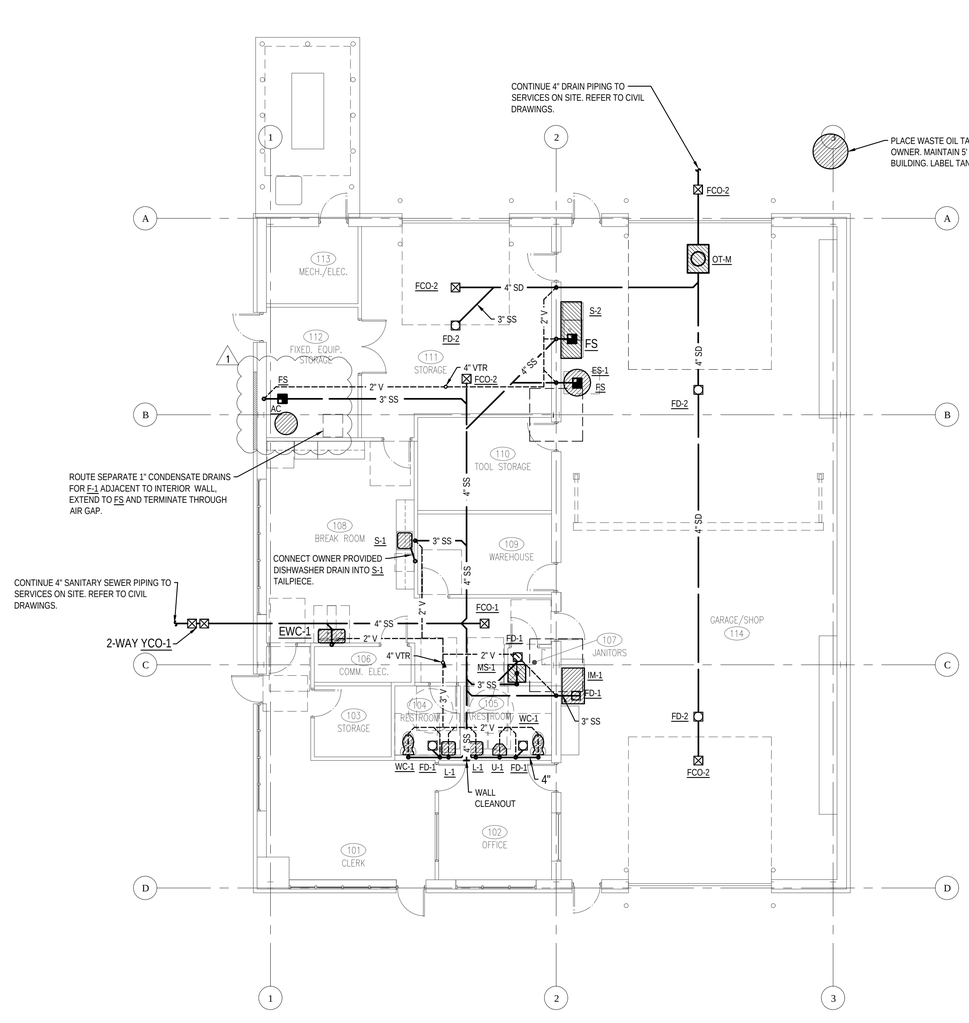

SEE CIVIL PLAN FOR TRUE NORTH

B Waste Vent Plan - Maintenance Building

SCALE : 1/8" = 1'-0"

PLOT DATE: 1/31/2020 10:54 AM

CEC

CEC CORPORATION
4555 W. MEMORIAL ROAD
OKLAHOMA CITY, OKLAHOMA 73142
P: 405.752.4200
WWW.CORNETCEC.COM

STATE OF OK CERTIFICATE OF AUTHORIZATION
CA-2456 EXP. 06/30/2021

COPYRIGHT © 2019 CEC. ALL RIGHTS RESERVED.
THIS DRAWING IS PROPERTY OF CEC. ANY REPRODUCTION OR USE OF THIS DRAWING WITHOUT EXPRESS WRITTEN AUTHORIZATION OF CEC IS PROHIBITED.

LICENSED PROFESSIONAL ENGINEER
Ezra Zoschke
24607
1/31/2020
OKLAHOMA

REVISION HISTORY

NO.	DESCRIPTION	DATE
1	ADDENDUM A	01/30/2020

SUBMITTAL: CONSTRUCTION DOCUMENTS
DATE: 09/21/2018
PROJECT NO: 180131.0018.06
DESIGNED BY: AP/EZ
DRAWN BY: AP/EZ/BM
APPROVED BY: ACB
SCALE: AS SHOWN

MAINTENANCE FACILITY

DIVISION 05 - BECKHAM COUNTY
OKLAHOMA DEPARTMENT OF TRANSPORTATION
SAYRE, OKLAHOMA

SHEET NAME
MAINTENANCE PLUMBING PLANS

SHEET
MP1.1

EQUIPMENT SHED NOTES:

1. INCLUDE FE1 AT EQUIPMENT SHED(S). COORDINATE LOCATION(S) WITH ENGINEER/ARCHITECT
2. PT. 5 ON ALL EXPOSED RED IRON STEEL
3. NO PAINT ON GALVANIZED STEEL
4. BROOM FINISH ON EQUIPMENT SHED SLAB

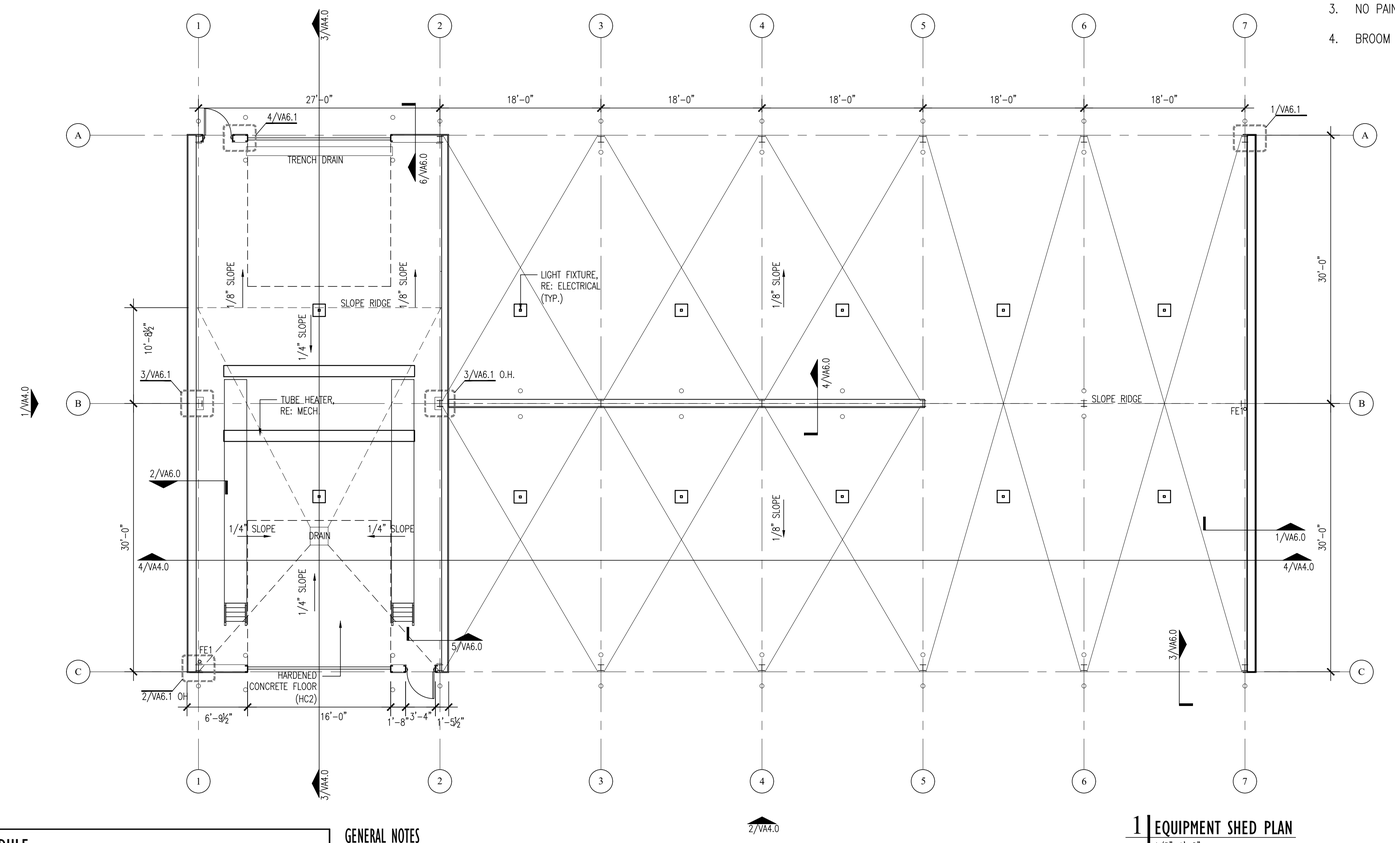

1 EQUIPMENT SHED PLAN

1/8"=1'-0"

CONTRACTOR TO CONFIRM TRUE NORTH WITH CIVIL SITE PLAN

ODOT 12 BAY UTILITY EQUIPMENT SHED CODE REVIEW

311.3 OCCUPANCY: UTILITY EQUIPMENT STORAGE SHED
503 TYPE II–B
ALLOWED: HEIGHT–55'0"_STORIES ABOVE GRADE–2_BLDG. AREA PER STORY–8,500 S.F.
PROVIDED: HEIGHT–20'9"_STORIES ABOVE GRADE–1_BLDG. AREA–7,125 S.F.

MATERIAL SCHEDULE

MARK	MATERIAL	MANUF./SUPPLIER	STYLE	COLOR	NOTES
HC2	HARDENED CONCRETE	CONVERGENCE	244+	–	1
FRP1	FIBERGLASS REINFORCED PLASTIC	MARLITE	STANDARD	LIGHT GREY	2
FRP2	FIBERGLASS REINFORCED PLASTIC	SPECIAL–LITE	AF–217 PEBBLE GRAIN	WHITE	3
MTP1	MTL PANEL	BY PEMB SUPPLIER	FLUROPON	SIM. TO PATINA GREEN BY VALSPAR	5
PT5	HIGH PERFORMANCE PAINT; RE. SPECS	SHERWIN WILLIAMS	SEMI–GLOSS	SW7015 REPOSE GRAY	4
PT6	PAINT	SHERWIN WILLIAMS	SATIN	SW6910 DAISY	6
PT7	PAINT	SHERWIN WILLIAMS	SATIN	COLOR MATCH TO OH DOOR PANELS	7
PT9	MTL PANEL	BY PEMB SUPPLIER	FLUROPON	SELECTED FROM MANUF. RANGE	9
MTP2	MTL PANEL	BY PEMB SUPPLIER	FLUROPON	WHITE	8

GENERAL NOTES

1. BROOM FINISH ON SLABS.

MATERIAL SCHEDULE NOTES

1. LOCATED ON SLAB IN WASH BAY.
2. LOCATED ON WALLS IN WASH BAY.
3. LOCATED ON MAN DOOR(S) IN WASH BAY.
4. HIGH PERFORMANCE PAINT AND/OR COATINGS ON ALL EXPOSED RED IRON STEEL. LOCATED AT EXPOSED STRUCTURE & CATWALKS.
5. LOCATED AT EXTERIOR VERTICAL METAL WALL PANEL.
6. LOCATED AT BOLLARDS.
7. LOCATED AT EXTERIOR STEEL SECTIONAL OVERHEAD DOOR JAMB FRAMING.
8. ~~LOCATED AT METAL ROOF PANELS.~~
9. LOCATED AT METAL PANEL WAINSCOT.

DOOR SCHEDULE

DOOR				FRAME		DETAIL				
NUMBER	MATERIAL	WIDTH	HEIGHT	MATERIAL	HARDWARE	JAMB	HEAD	SILL	NOTES	COMMENTS
OH DOOR(S)	STEEL	16'–0"	12'–0"	STEEL	SEE SPECS	4/VA6.1	12/VA6.1	–		1,2
MAN DOOR(S)	FRP	3'–0"	7'–0"	FRP	SEE SPECS	SIM 14/MA11.1	SIM 15/MA11.1	–		1,2

GENERAL NOTES:

1. ALL GLAZING IN DOORS AND BORROWED LITES SHALL BE TEMPERED AS REQUIRED BY CODE.
2. ALL LOCKSETS SHALL BE KEYED AT THE DIRECTION OF OWNER.

DOOR SCHEDULE NOTES:

1. INSULATED DOOR.
2. PROVIDE WEATHERSTRIPPING AROUND DOOR.

PLOT DATE: 1/24/2020 8:44 AM

CEC
infrastructure solutions

CEC CORPORATION
4555 W. MEMORIAL ROAD
OKLAHOMA CITY, OKLAHOMA 73142
P: 405.753.4200
WWW.CONNECTCEC.COM

STATE OF OK CERTIFICATE OF AUTHORIZATION
CA-2576 EXP. DATE 06/30/20

COPYRIGHT © 2019 CEC. ALL RIGHTS RESERVED.
THIS DRAWING IS PROPERTY OF CEC. ANY REPRODUCTION OR REUSE OF THIS DRAWING WITHOUT EXPRESS WRITTEN AUTHORIZATION OF CEC IS PROHIBITED.

STATE OF OKLAHOMA
JOSHUA S. HILL
16663
LICENSED ARCHITECT

1/30/20

REVISION HISTORY

NO.	DESCRIPTION	DATE
1	ADDENDUM A	01/30/2020

SUBMITTAL: CONSTRUCTION DOCUMENTS

DATE: 09/21/2018
PROJECT NO: –
DESIGNED BY: KO
DRAWN BY: KO
APPROVED BY: JH
SCALE: AS SHOWN

MAINTENANCE FACILITY

DIVISION 05 - BECKHAM COUNTY
OKLAHOMA DEPARTMENT OF TRANSPORTATION
SAYRE, OKLAHOMA

SHEET NAME
EQUIPMENT SHED FLOOR PLAN(S)

SHEET
VA2.0

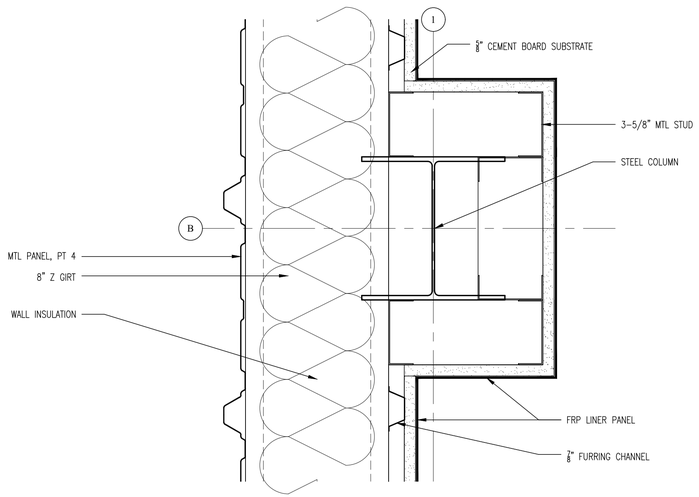

3 PLAN DETAIL
3/4"=1'-0"

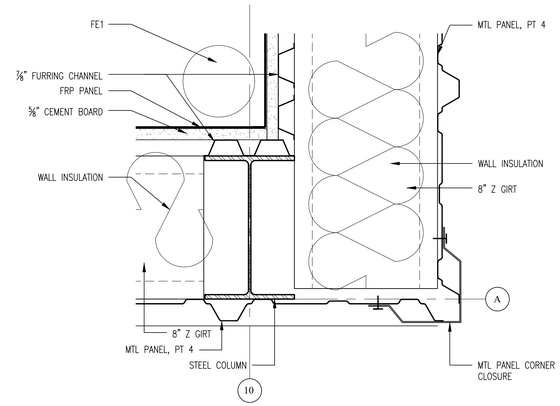

2 PLAN DETAIL
3"=1'-0"

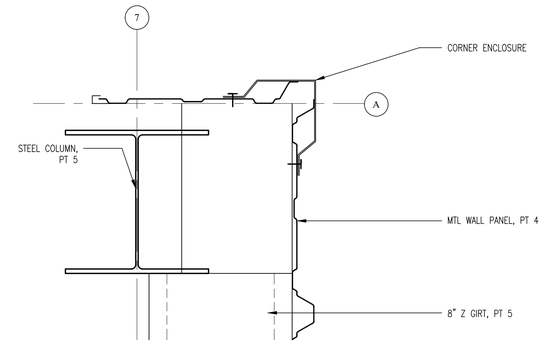

1 PLAN DETAIL
3"=1'-0"

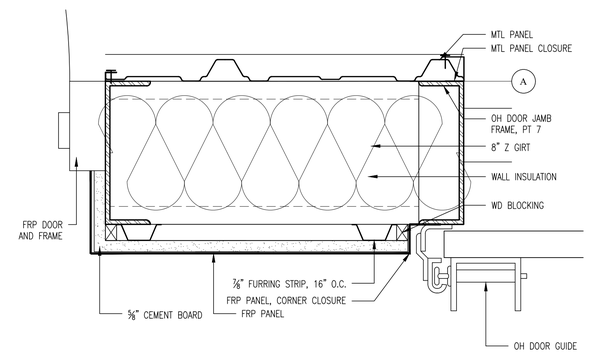

4 DOOR JAMB PLAN DETAIL
3"=1'-0"

5 NOT USED

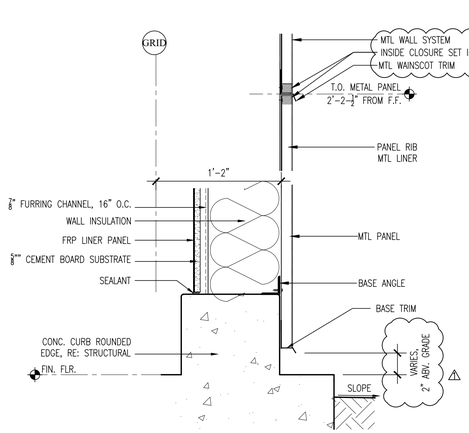

8 SECTION DETAIL
1 1/2"=1'-0"

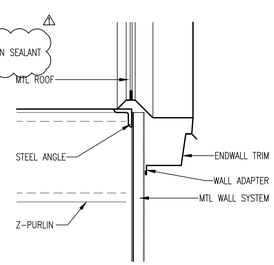

7 SECTION DETAIL
1 1/2"=1'-0"

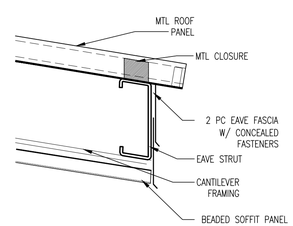

6 SECTION DETAIL
1 1/2"=1'-0"

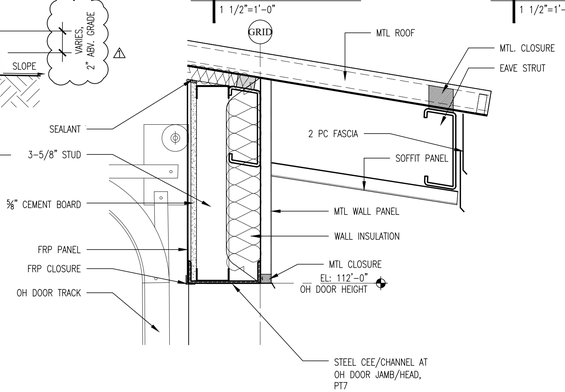

12 SECTION DETAIL
1 1/2"=1'-0"

11 NOT USED
--

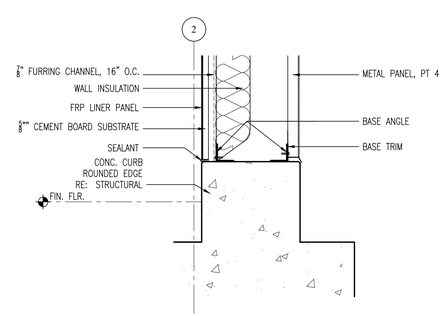

10 SECTION DETAIL
1 1/2"=1'-0"

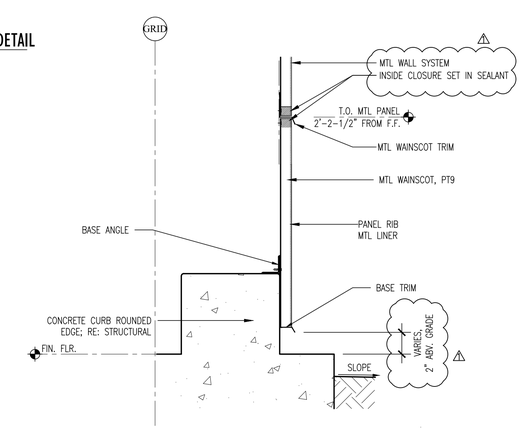

9 SECTION DETAIL
1 1/2"=1'-0"

PLOT DATE: 1/24/2020 8:44 AM

CEC
infrastructure solutions

CEC CORPORATION
4555 W. MEMORIAL ROAD
OKLAHOMA CITY, OKLAHOMA 73142
P: 405.755.4200
WWW.CORNERCEC.COM

STATE OF OKLAHOMA
CERTIFICATE OF AUTHORIZATION
CA 33 EXPIRES 30 JUN 20

COPYRIGHT © 2016 CEC. ALL RIGHTS RESERVED.
THIS DRAWING IS PROPERTY OF CEC. ANY
REPRODUCTION OR USE OF THIS DRAWING
WITHOUT EXPRESS WRITTEN AUTHORIZATION OF
CEC IS PROHIBITED.

STATE OF OKLAHOMA
JOSHUA S. HILL
21663
LICENSED ARCHITECT

1/30/20

REVISION HISTORY

NO.	DESCRIPTION	DATE
1	ADDENDUM A	01/30/2020

CONSTRUCTION DOCUMENTS

DATE:	08/21/2018
PROJECT NO:	-
DESIGNED BY:	KO
DRAWN BY:	KO
APPROVED BY:	JH
SCALE:	AS SHOWN

SUBMITTAL:

MAINTENANCE FACILITY

DIVISION 05 - BECKHAM COUNTY
OKLAHOMA DEPARTMENT OF TRANSPORTATION

SAYRE, OKLAHOMA

SHEET NAME
EQUIPMENT SHED DETAILS

SHEET
VA6.1

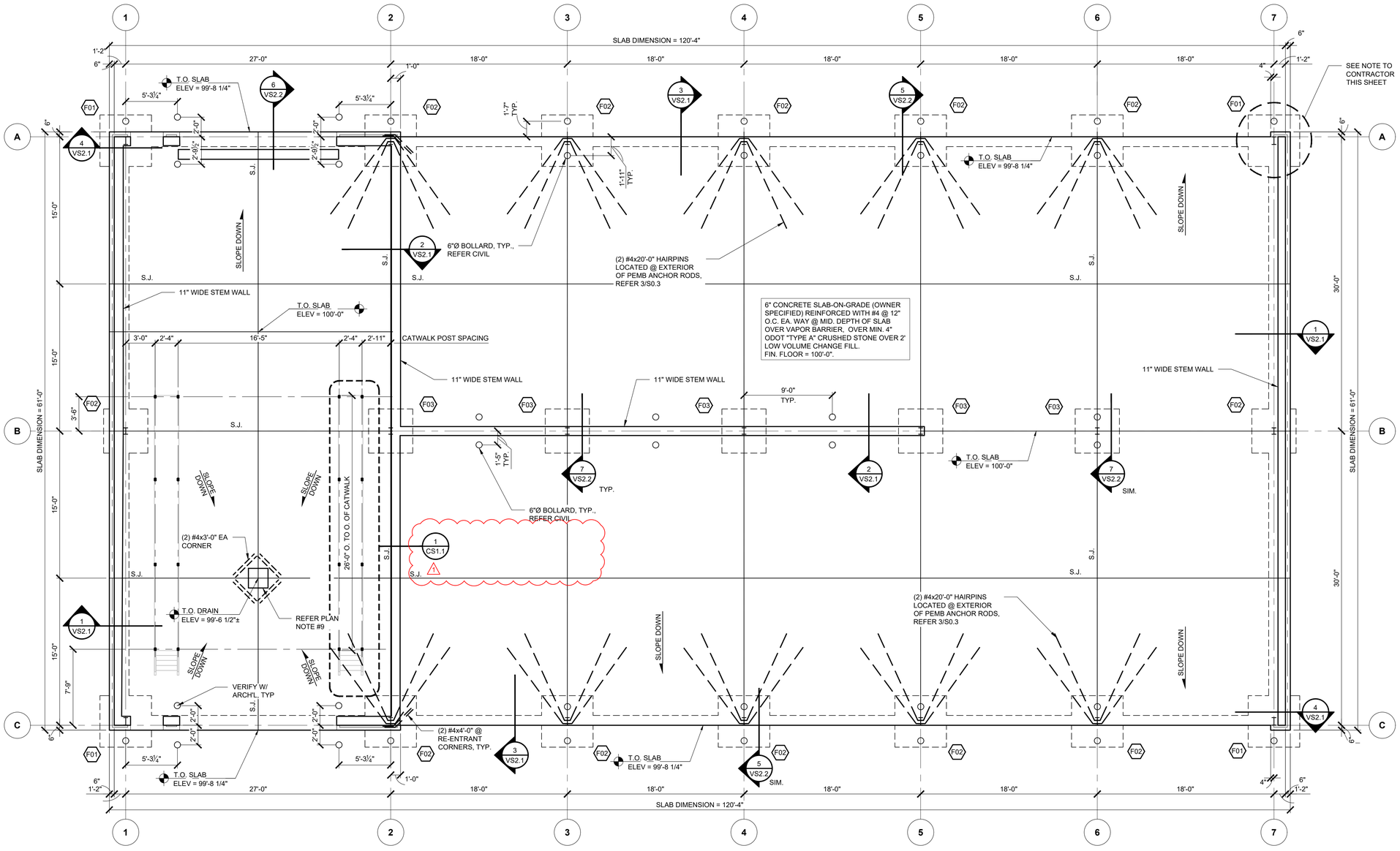

NOTE:
THE FOUNDATION PLAN AND DETAILS FOR THE PRE-ENGINEERED METAIL BUILDINGS ARE BASED ON PRELIMINARY OR ASSUMED FRAME REACTIONS AND ARE THEREFORE PRELIMINARY AND PROVIDED FOR PERMIT DRAWINGS AND FOR BID PURPOSES ONLY. THE CONTRACTOR SHALL SUBMIT THE MANUFACTURER'S ANCHOR ROD DRAWINGS ALONG WITH SIGNED AND SEALED CALCULATIONS. ONCE THESE ARE RECEIVED BY THE STRUCTURAL ENGINEER OF RECORD, THE FOUNDATION DESIGNS WILL BE FINALIZED. REFER TO THE GENERAL NOTES FOR ADDITIONAL INFORMATION.

NOTE:
FOOTING SIZES SHOWN ON PLAN ARE SCHEMATIC IN NATURE AND ARE NOT TO BE SCALED.

FOOTING SCHEDULE

MARK	DIMENSIONS WIDTH	LENGTH	DEPTH	REINFORCING
F01	3'-6"	3'-6"	2'-0"	(4) #6 EA. WAY TOP & BOTT.
F02	5'-0"	5'-0"	2'-0"	(6) #6 EA. WAY TOP & BOTT.
F03	6'-3"	6'-3"	2'-0"	(7) #6 EA. WAY TOP & BOTT.

GC NOTE:
REFER CIVIL FOR PLAN ORIENTATION.

1 / VS1.1 12 - BAY VEHICLE SHED FOUNDATION PLAN

SCALE: 3/16" = 1'-0"

PLAN NOTES:
1. STRUCTURAL ELEVATION 100'-0" = CIVIL FINISHED FLOOR, REFER CIVIL.
2. REFER SHEETS S0.1 FOR GENERAL NOTES .
3. S.J. = SAWED JOINT.
   C.J. = CONSTRUCTION JOINT.
   REFER DETAIL 2/S0.3 FOR SLAB JOINTING INFORMATION.
4. FOR TYPICAL CORNER REINFORCEMENT, REFER DETAIL 1/S0.3.
5. FOR VEHICLE SHED CATWALKS, REFER SHEET CS1.1.
6. PEMB MANUF. TO COORDINATE W/ MECHL & ARCH'L FOR ALL SUSPENDED EQUIPMENT LOADS. REFER GENERAL NOTES ON S0.1 FOR ADD'L. INFORMATION.
7. ALL STRUCTURAL STEEL FOR IN WASH BAYS SHALL BE PAINTED UNLESS GALVANIZED.
8. PROVIDE BROOM FINISH TO NEW CONCRETE SLAB-ON-GRADE.
9. FLOOR DRAIN, REFER CIVIL AND PLUMBING. DRAIN TO BE PLACED INTEGRALLY WITH THE SLAB POUR.

PLOT DATE:

CEC®

CEC CORPORATION
4555 W. MEMORIAL ROAD
OKLAHOMA CITY, OKLAHOMA 73142
P: 405.755.4200
WWW.CONNECTCEC.COM
STATE OF OKLAHOMA CERTIFICATE OF AUTHORIZATION CA 3E EXPIRES 06/30/2020

COPYRIGHT © 2019 CEC. ALL RIGHTS RESERVED.
THIS DRAWING IS PROPERTY OF CEC. ANY REPRODUCTION OR USE FOR OTHER PURPOSES WITHOUT EXPRESS WRITTEN AUTHORIZATION OF CEC IS PROHIBITED.

LICENSED PROFESSIONAL ENGINEER
CHRISTOPHER L. SNIDER
01-30-2020
23089
OKLAHOMA

REVISION HISTORY

NO.	DESCRIPTION	DATE
1	ADDENDUM A	1/30/20

SUBMITTAL: 100% - CONSTRUCTION DOCUMENTS
DATE: 09/21/2018
PROJECT NO: 180131.0018.02
DESIGNED BY: C.L.S.
DRAWN BY: C.L.S.
APPROVED BY: C.L.S.
SCALE: AS SHOWN

MAINTENANCE FACILITY
DIVISION 5 - BECKHAM COUNTY
OKLAHOMA DEPARTMENT OF TRANSPORTATION
SAYRE, OKLAHOMA

SHEET NAME
12 - BAY VEHICLE SHED FOUNDATION PLAN

SHEET
VS1.1

MISCELLANEOUS EQUIPMENT SCHEDULE

PW-V - OWNER PROVIDED
LANDA MODEL #MHC3-30324, OR EQUAL. WATER PORTABLE POWER WASHER, GASOLINE-POWERED, DIESEL-HEATED, CAPABLE OF 3.0GPM AT 3000 PSI, . INCLUDE 50' X 1/2" X 5000 PSI HP HOSE, VARIABLE PRESSURE DUAL LANCE WAND WITH TRIGGER GUN CONTROL AND FLOAT TANK AND INLET DETERGENT VALVE. ALSO INCLUDE 50' X 3/8" COMMERCIAL GRADE REINFORCED RUBBER HOSE (BLACK). PROVIDE A 10"X14" VINYL SIGN READING: "WARNING - DO NOT OPERATE MACHINERY INSIDE WITHOUT VENTILATING TO OUTSIDE".

OT-V
OIL INTERCEPTOR
SCHIER MODEL OS-50 OR EQUAL. INCLUDE FIELD ADJUSTABLE RISERS AS REQUIRED TO INSTALL FLUSH WITH FINISH FLOOR AND 16,000# HEAVY DUTY KIT. INSTALL PER MANUFACTURER'S INSTRUCTIONS.

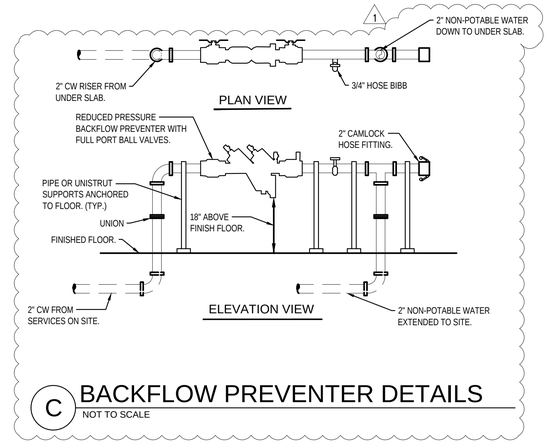

C BACKFLOW PREVENTER DETAILS
NOT TO SCALE

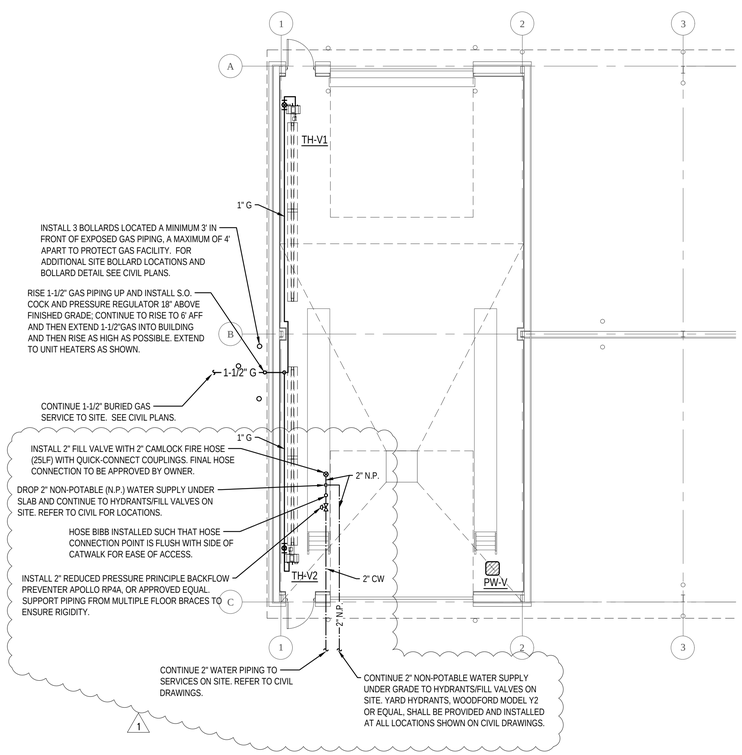

SEE CIVIL PLAN FOR TRUE NORTH

A Plumbing Plan - Equipment Shed
SCALE : 1/8" = 1'-0"

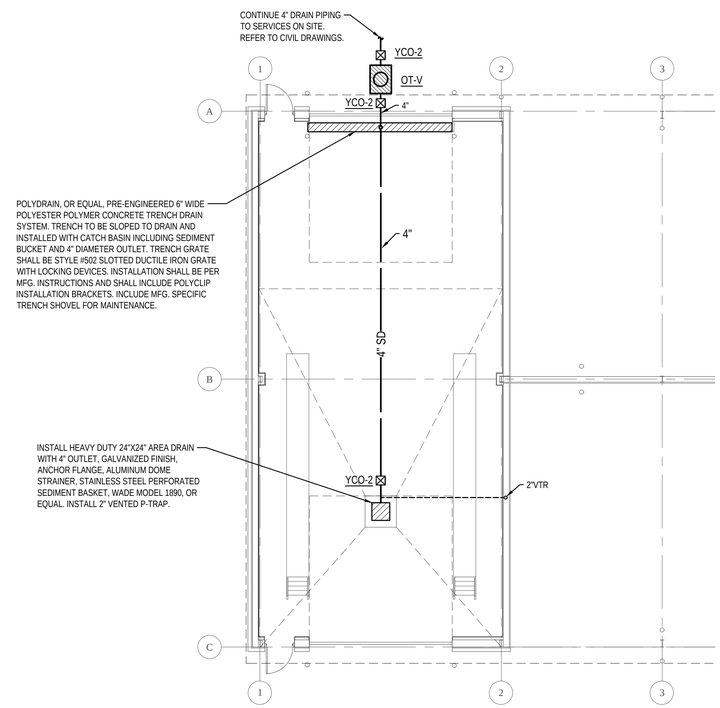

SEE CIVIL PLAN FOR TRUE NORTH

B Waste-Vent Plan - Equipment Shed
SCALE : 1/8" = 1'-0"

PLOT DATE: 1/31/2020 10:58 AM

CEC

CEC CORPORATION
4555 W. MEMORIAL ROAD
OKLAHOMA CITY, OKLAHOMA 73142
P: 405.752.4200
WWW.CONNECTCEC.COM

STATE OF OK CERTIFICATE OF AUTHORIZATION
CA 1365 EXPIRES JUNE 30, 2020

COPYRIGHT © 2019 CEC. ALL RIGHTS RESERVED
THIS DRAWING IS PROPERTY OF CEC. ANY
REPRODUCTION OR USE FOR OTHER WORKS
WITHOUT EXPRESS WRITTEN AUTHORIZATION OF
CEC IS PROHIBITED.

LICENSED PROFESSIONAL ENGINEER
Ezra Zoschke
24607
1/31/2020
OKLAHOMA

REVISION HISTORY

NO.	DESCRIPTION	DATE
1	ADDENDUM A	01/30/2020

SUBMITTAL:	CONSTRUCTION DOCUMENTS
DATE:	09/21/2018
PROJECT NO:	180131.0018.06
DESIGNED BY:	AP/EZ
DRAWN BY:	AP/EZ/BM
APPROVED BY:	ACB
SCALE:	AS SHOWN

MAINTENANCE FACILITY
DIVISION 05 - BECKHAM COUNTY
OKLAHOMA DEPARTMENT OF TRANSPORTATION
SAYRE, OKLAHOMA

SHEET NAME
EQUIPMENT SHED PLUMBING PLANS AND SCHEDULES

SHEET
VP1.1

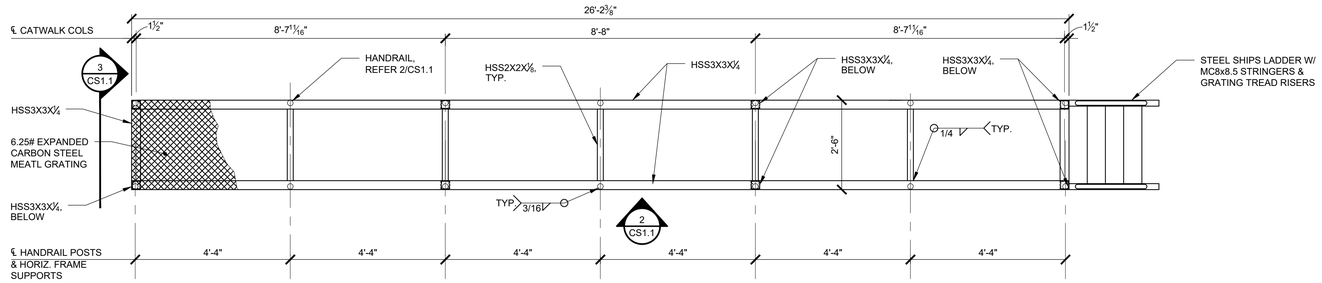

1 CS1.1 CATWALK FRAMING PLAN

SCALE: 1/2" = 1'-0"

PLAN NOTES:

1. ALL STEEL BEAMS & COLUMNS SHALL BE PAINTED UNLESS GALVANIZED. AN EXTERIOR REPAIR PAINT SHALL BE APPLIED TO CONNECTIONS AFTER WELDING OPERATIONS ARE COMPLETED.
2. REFER TO 8/S0.4 FOR TYPICAL DECK ATTACHMENT DETAIL.

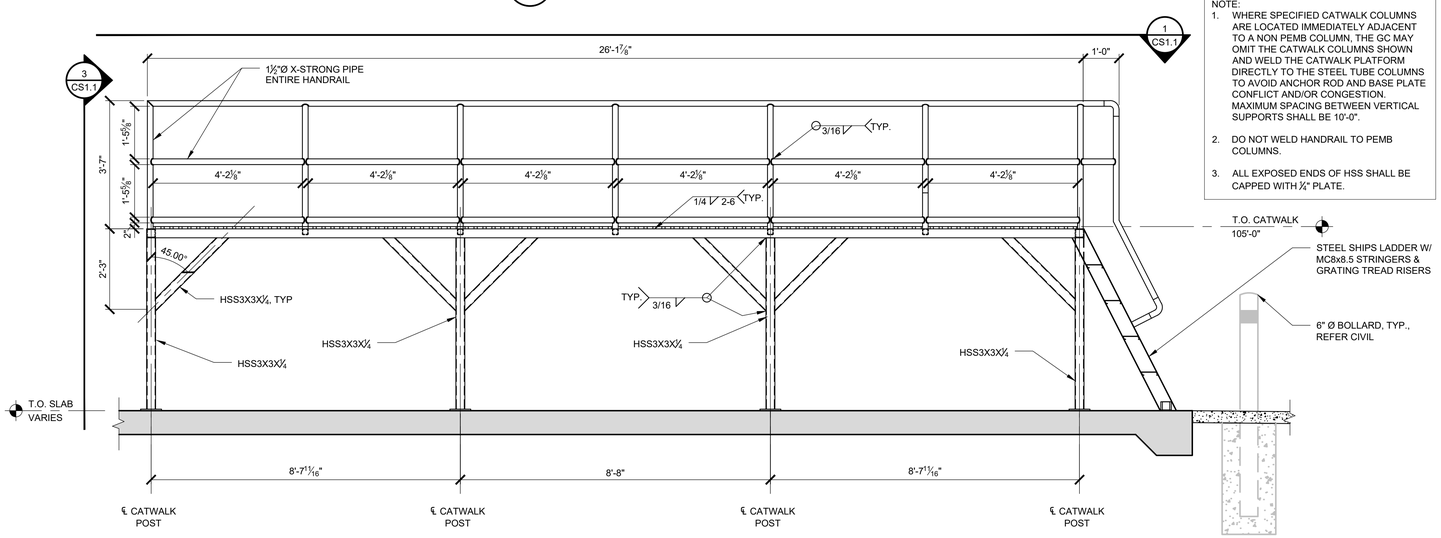

NOTE:

1. WHERE SPECIFIED CATWALK COLUMNS ARE LOCATED IMMEDIATELY ADJACENT TO A NON PEMB COLUMN, THE GC MAY OMIT THE CATWALK COLUMNS SHOWN AND WELD THE CATWALK PLATFORM DIRECTLY TO THE STEEL TUBE COLUMNS TO AVOID ANCHOR ROD AND BASE PLATE CONFLICT AND/OR CONGESTION. MAXIMUM SPACING BETWEEN VERTICAL SUPPORTS SHALL BE 10'-0".
2. DO NOT WELD HANDRAIL TO PEMB COLUMNS.
3. ALL EXPOSED ENDS OF HSS SHALL BE CAPPED WITH ¼" PLATE.

2 CS1.1 CATWALK SIDE ELEVATION

SCALE: 1/2" = 1'-0"

NOTE:
ALL EXPOSED ENDS OF HSS SHALL BE CAPPED WITH ¼" PLATE.

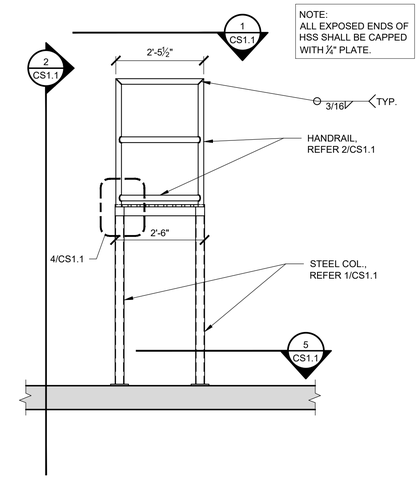

3 CS1.1 CATWALK END ELEVATION

SCALE: 1/2" = 1'-0"

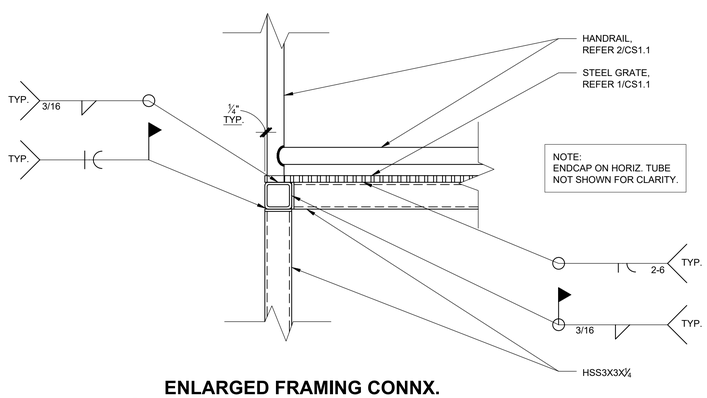

4 CS1.1 ENLARGED FRAMING CONNX. DETAIL

SCALE: 1-1/2" = 1'-0"

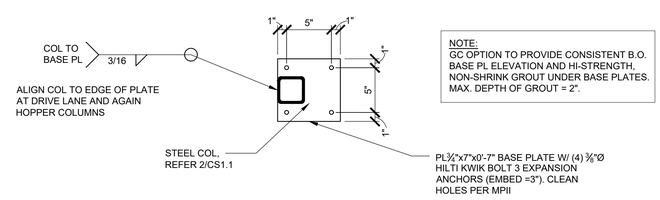

NOTE:
GC OPTION TO PROVIDE CONSISTENT B.O. BASE PL ELEVATION AND HI-STRENGTH, NON-SHRINK GROUT UNDER BASE PLATES. MAX. DEPTH OF GROUT = 2".

5 CS1.1 CATWALK COLUMN BASE PLATE DETAIL

SCALE: 1-1/2" = 1'-0"

ENTIRE SHEET

PLOT DATE: 1/30/2020 2:14 PM

CEC

CEC CORPORATION
4555 W. MEMORIAL ROAD
OKLAHOMA CITY, OKLAHOMA 73142
P: 405.755.4200
WWW.CONNECTECC.COM
STATE OF OKLAHOMA CA 3281 EXPIRES 06/30/2020

COPYRIGHT © 2019 CEC. ALL RIGHTS RESERVED.
THIS DRAWING IS PROPERTY OF CEC. ANY REPRODUCTION OR USE FOR OTHER PURPOSES WITHOUT EXPRESS WRITTEN AUTHORIZATION OF CEC IS PROHIBITED.

LICENSED PROFESSIONAL ENGINEER
CHRISTOPHER L. SNIDER
01/30/2020
23089
OKLAHOMA

REVISION HISTORY

NO.	DESCRIPTION	DATE
1	ADDENDUM A	1/30/20

SUBMITTAL:	100% - CONSTRUCTION DOCUMENTS
DATE:	09/21/2018
PROJECT NO:	180131.0018.02
DESIGNED BY:	C.L.S.
DRAWN BY:	C.L.S.
APPROVED BY:	C.L.S.
SCALE:	AS SHOWN

MAINTENANCE FACILITY
DIVISION 5 - BECKHAM COUNTY
OKLAHOMA DEPARTMENT OF TRANSPORTATION
SAYRE, OKLAHOMA

SHEET NAME
CATWALK DETAILS AND LAYOUT

SHEET
CS1.1

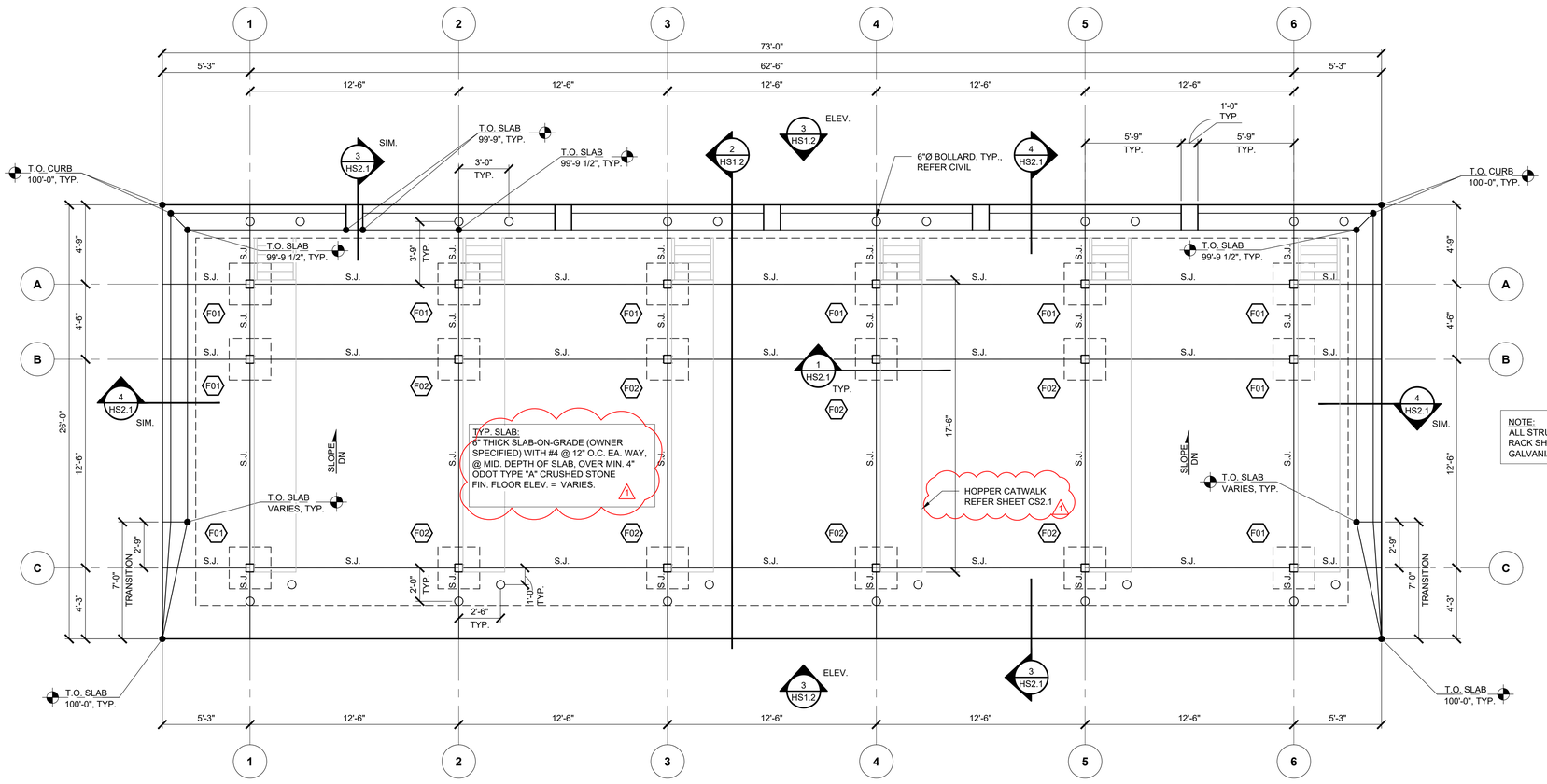

NOTE:
ALL STRUCTURAL STEEL FOR HOPPER RACK SHALL BE PAINTED UNLESS GALVANIZED.

NOTE:
FOOTING SIZES SHOWN ON PLAN ARE SCHEMATIC IN NATURE AND ARE NOT TO BE SCALED.

FOOTING SCHEDULE

MARK	DIMENSIONS			REINFORCING
	WIDTH	LENGTH	DEPTH	
F01	3'-0"	3'-0"	2'-0"	REFER DETAILS
F02	4'-0"	4'-0"	2'-0"	REFER DETAILS

GC NOTE:
REFER CIVIL FOR PLAN NORTH ORIENTATION.

1 / HS1.1 5 - BAY HOPPER RACK FOUNDATION PLAN

SCALE: 1/4" = 1'-0"

PLAN NOTES:
1. STRUCTURAL ELEVATION 100'-0" = CIVIL FINISHED FLOOR, REFER CIVIL PLANS.
2. REFER SHEET S0.1 FOR GENERAL NOTES.
3. S.J. = SAWED JOINT.
   C.J. = CONSTRUCTION JOINT.
   REFER DETAIL 2/S0.3 FOR SLAB JOINTING INFORMATION.
4. PROVIDE BROOM FINISH TO NEW CONCRETE SLAB-ON-GRADE.

PLOT DATE:

CEC

CEC CORPORATION
4555 W. MEMORIAL ROAD
OKLAHOMA CITY, OKLAHOMA 73142
P: 405.755.4200
WWW.CONNECTCEC.COM
STATE OF OKLAHOMA CERTIFICATE OF AUTHORIZATION
CA# 38 EXPIRES: 06/30/20

COPYRIGHT © 2019 CEC. ALL RIGHTS RESERVED.
THIS DRAWING IS PROPERTY OF CEC. ANY REPRODUCTION OR USE FOR OTHER PURPOSES WITHOUT EXPRESS WRITTEN AUTHORIZATION OF CEC IS PROHIBITED.

LICENSED PROFESSIONAL ENGINEER
CHRISTOPHER L. SNIDER
01-30-2020
23089
OKLAHOMA

REVISION HISTORY

NO.	DESCRIPTION	DATE
1	ADDENDUM A	1/30/20

SUBMITTAL: 100% - CONSTRUCTION DOCUMENTS
DATE: 09/21/2018
PROJECT NO: 180131.0018.02
DESIGNED BY: C.L.S.
DRAWN BY: C.L.S.
APPROVED BY: C.L.S.
SCALE: AS SHOWN

MAINTENANCE FACILITY
DIVISION 5 - BECKHAM COUNTY
OKLAHOMA DEPARTMENT OF TRANSPORTATION
SAYRE, OKLAHOMA

SHEET NAME
5 - BAY HOPPER RACK FOUNDATION PLAN

SHEET
HS1.1

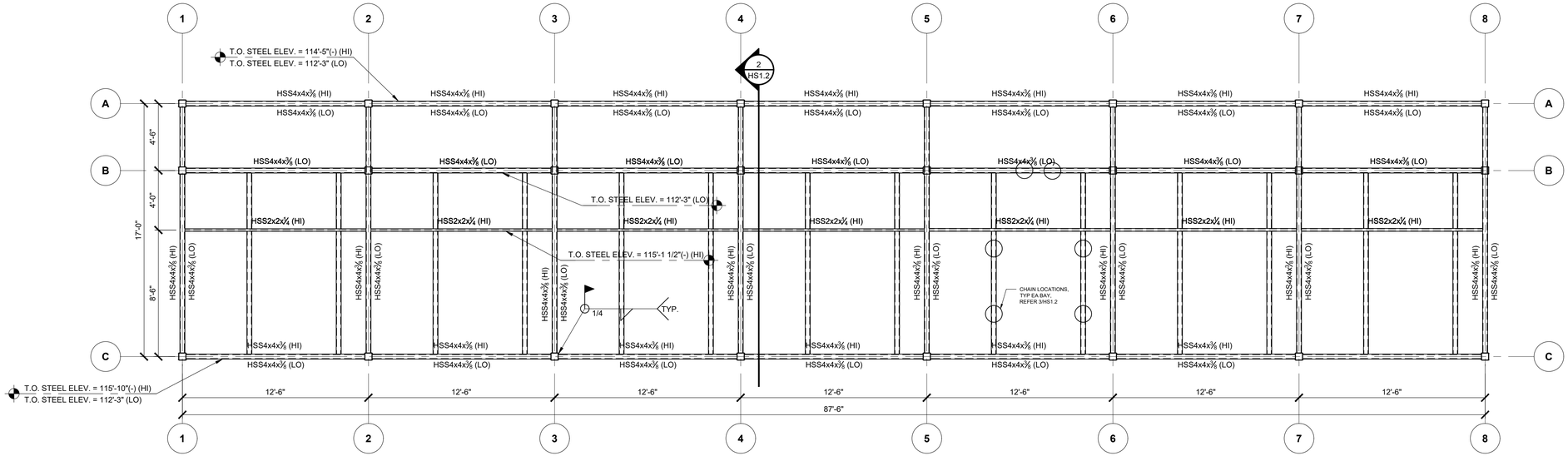

GC NOTE:
REFER CIVIL FOR PLAN NORTH ORIENTATION.

PLAN NOTES:
1. ALL EXPOSED ENDS OF HSS SHALL BE CAPPED WITH ¼" PLATE.
2. REFER TO 8/S0.4 FOR TYPICAL DECK ATTACHMENT DETAIL.

NOTE:
ALL STRUCTURAL STEEL FOR HOPPER RACK SHALL BE PAINTED UNLESS GALVANIZED.

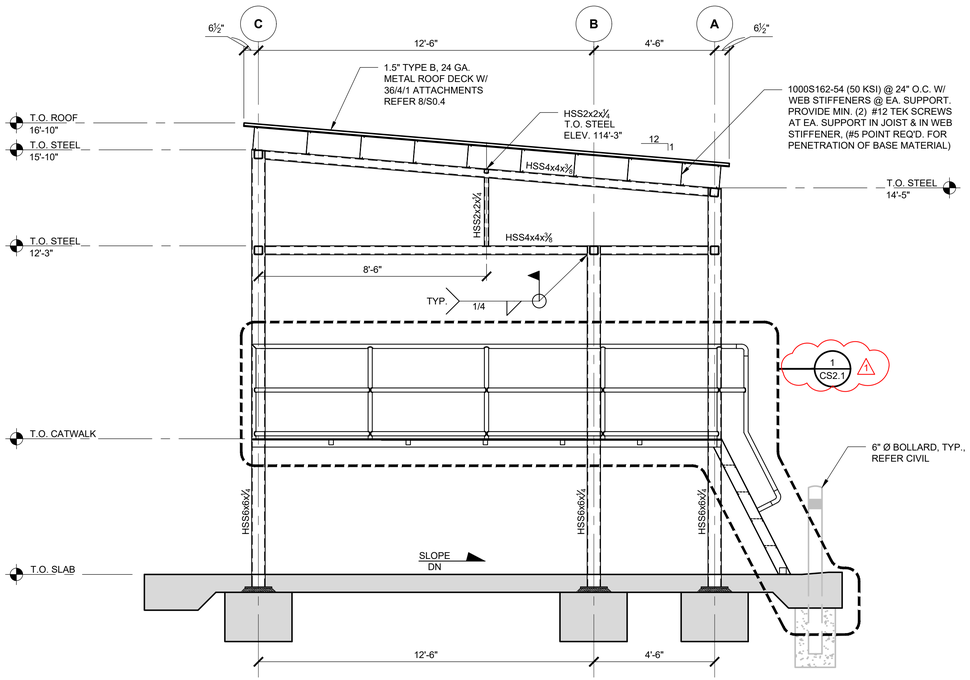

2 HS1.2 TYPICAL FRAMING SECTION

SCALE: 3/8" = 1'-0"

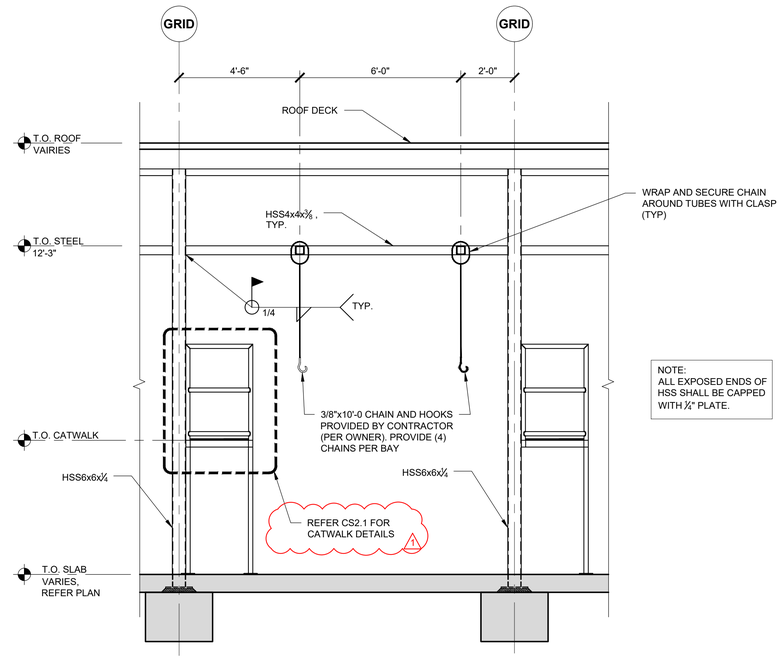

NOTE:
ALL EXPOSED ENDS OF HSS SHALL BE CAPPED WITH ¼" PLATE.

3 HS1.2 HOPPER RACK FRONT ELEVATION

SCALE: 3/8" = 1'-0"

PLOT DATE:

CEC®

CEC CORPORATION
4555 W. MEMORIAL ROAD
OKLAHOMA CITY, OKLAHOMA 73142
P: 405.755.4200
WWW.CONNECTECC.COM
STATE OF OKLAHOMA CERTIFICATE OF AUTHORIZATION
CA# 3E EXPIRES: 06/30/2020

COPYRIGHT © 2019 CEC. ALL RIGHTS RESERVED.
THIS DRAWING IS PROPERTY OF CEC. ANY REPRODUCTION OR USE OF THIS DRAWING WITHOUT EXPRESS WRITTEN AUTHORIZATION OF CEC IS PROHIBITED.

LICENSED PROFESSIONAL ENGINEER
CHRISTOPHER L. SNIDER
01-30-2020
23089
OKLAHOMA

REVISION HISTORY

NO.	DESCRIPTION	DATE
1	ADDENDUM A	1/30/20

SUBMITTAL:	100% - CONSTRUCTION DOCUMENTS
DATE:	09/21/2018
PROJECT NO:	180131.0018.02
DESIGNED BY:	C.L.S.
DRAWN BY:	C.L.S.
APPROVED BY:	C.L.S.
SCALE:	AS SHOWN

MAINTENANCE FACILITY

DIVISION 5 - BECKHAM COUNTY
OKLAHOMA DEPARTMENT OF TRANSPORTATION
SAYRE, OKLAHOMA

SHEET NAME
7 - BAY HOPPER RACK FRAMING PLAN

SHEET
HS1.2

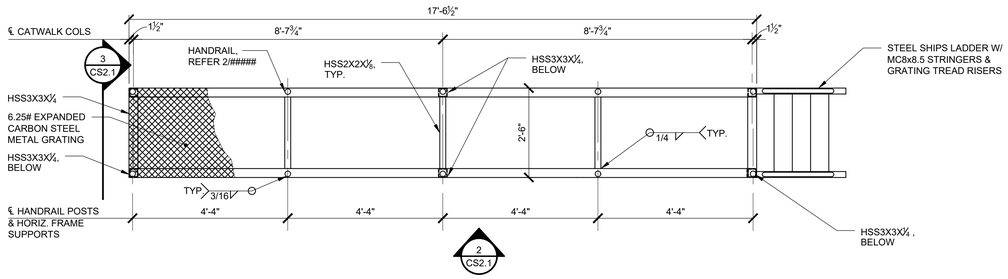

1 CS2.1 CATWALK FRAMING PLAN

SCALE: 1/2" = 1'-0"

PLAN NOTES:

1. ALL STEEL BEAMS & COLUMNS SHALL BE PAINTED UNLESS GALVANIZED. AN EXTERIOR REPAIR PAINT SHALL BE APPLIED TO CONNECTIONS AFTER WELDING OPERATIONS ARE COMPLETED.
2. REFER TO 8/S0.4 FOR TYPICAL DECK ATTACHMENT DETAIL.

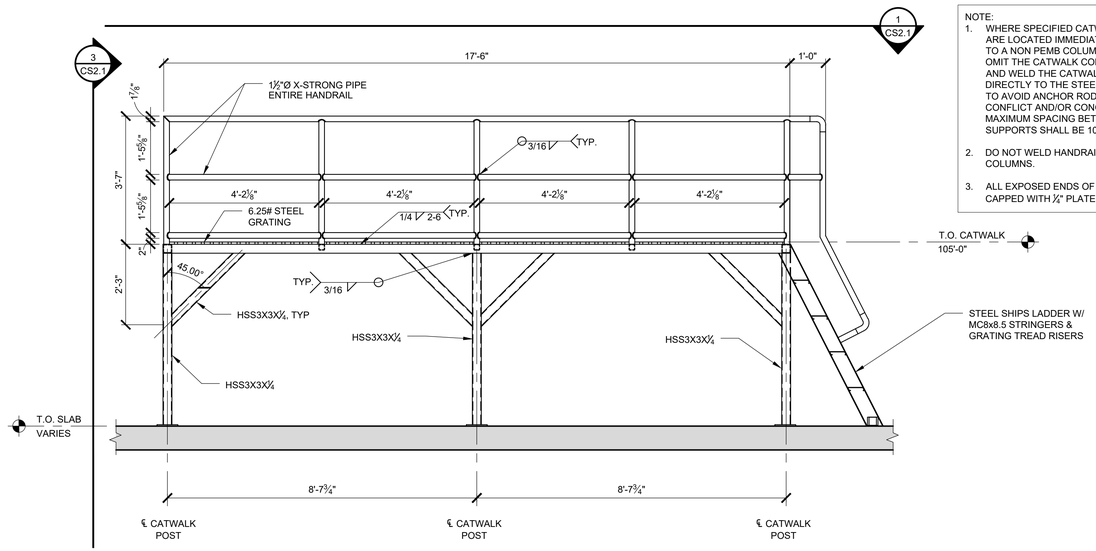

NOTE:

1. WHERE SPECIFIED CATWALK COLUMNS ARE LOCATED IMMEDIATELY ADJACENT TO A NON PEMB COLUMN, THE GC MAY OMIT THE CATWALK COLUMNS SHOWN AND WELD THE CATWALK PLATFORM DIRECTLY TO THE STEEL TUBE COLUMNS TO AVOID ANCHOR ROD AND BASE PLATE CONFLICT AND/OR CONGESTION. MAXIMUM SPACING BETWEEN VERTICAL SUPPORTS SHALL BE 10'-0".
2. DO NOT WELD HANDRAIL TO PEMB COLUMNS.
3. ALL EXPOSED ENDS OF HSS SHALL BE CAPPED WITH ¼" PLATE.

2 CS2.1 CATWALK SIDE ELEVATION

SCALE: 1/2" = 1'-0"

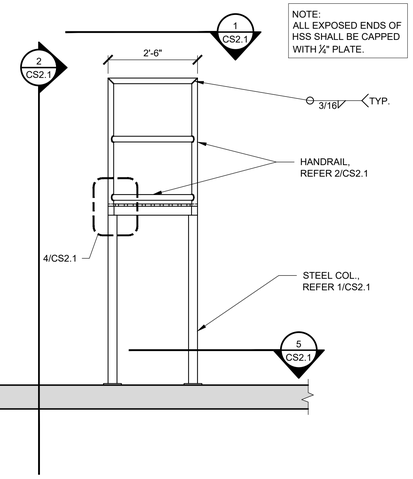

NOTE:
ALL EXPOSED ENDS OF HSS SHALL BE CAPPED WITH ¼" PLATE.

3 CS2.1 CATWALK END ELEVATION

SCALE: 1/2" = 1'-0"

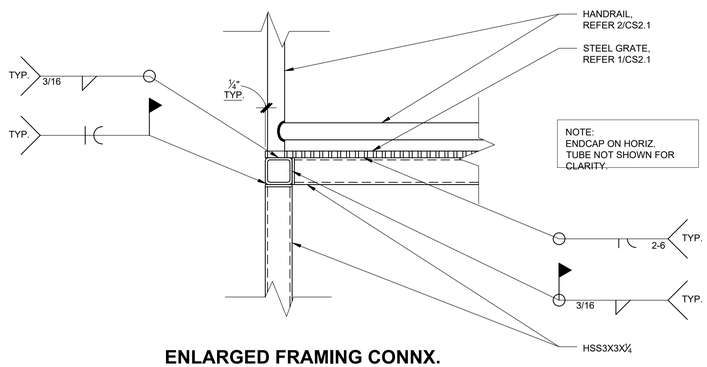

NOTE:
ENDCAP ON HORIZ. TUBE NOT SHOWN FOR CLARITY.

4 CS2.1 ENLARGED FRAMING CONNX. DETAIL

SCALE: 1-1/2" = 1'-0"

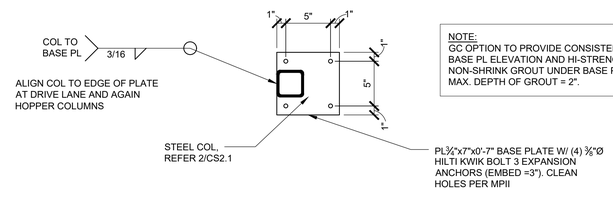

NOTE:
GC OPTION TO PROVIDE CONSISTENT B.O. BASE PL ELEVATION AND HI-STRENGTH, NON-SHRINK GROUT UNDER BASE PLATES. MAX. DEPTH OF GROUT = 2".

5 CS2.1 CATWALK COLUMN BASE PLATE DETAIL

SCALE: 1-1/2" = 1'-0"

1 NEW SHEET

PLOT DATE: 2/3/2020 10:09 AM

CEC

CEC CORPORATION
4555 W. MEMORIAL ROAD
OKLAHOMA CITY, OKLAHOMA 73142
P: 405.753.4200
WWW.CONNECTCEC.COM
STATE OF OKLAHOMA CERTIFICATE OF AUTHORIZATION CA 3E EXPIRES 06/30/2020

COPYRIGHT © 2018 CEC. ALL RIGHTS RESERVED
THIS DRAWING IS PROPERTY OF CEC. ANY REPRODUCTION OR USE OF THIS DRAWING WITHOUT EXPRESS WRITTEN AUTHORIZATION OF CEC IS PROHIBITED.

LICENSED PROFESSIONAL ENGINEER
CHRISTOPHER E. SNIDER
01-30-2020
23089
OKLAHOMA

REVISION HISTORY

NO.	DESCRIPTION	DATE
1	ADDENDUM A	1/30/20

SUBMITTAL:	100% - CONSTRUCTION DOCUMENTS
DATE:	09/21/2018
PROJECT NO:	180131.0018.02
DESIGNED BY:	C.L.S.
DRAWN BY:	C.L.S.
APPROVED BY:	C.L.S.
SCALE:	AS SHOWN

MAINTENANCE FACILITY

DIVISION 5 - BECKHAM COUNTY
OKLAHOMA DEPARTMENT OF TRANSPORTATION
SAYRE, OKLAHOMA

SHEET NAME
HOPPER CATWALK DETAILS

SHEET
CS2.1