Detectable Warning Requirements

Detectable warnings on curb ramps have been in and out of the ADA/ABA requirements for the past several years. The current requirement in ABAAS is they are required at platform edges only.

However, The Access Board has a draft guideline for Public Rights of Way (unofficial) which includes a requirement for a detectable warning surface 2 feet deep where the ramp, landing, or blended transition connects to a crosswalk.

The DSC design standard is to require the detectable warnings (truncated domes) on curb ramps in walks that continue across a street. They are not required at curb ramps in parking lots.

See:

Revised Draft Guidelines for Accessible Public Rights-of-Way

November 23, 2005: http://www.access-board.gov/prowac/draft.htm

R221 Detectable Warning Surfaces
Detectable warning surfaces shall comply with R304.

Advisory R221 Detectable Warning Surfaces. Detectable warning surfaces are required where curb ramps, blended transitions, or landings provide a flush pedestrian connection to the street. Sidewalk crossings of residential driveways should not generally be provided with detectable warnings, since the pedestrian right-of-way continues across most driveway aprons and overuse of detectable warning surfaces should be avoided in the interests of message clarity. However, where commercial driveways are provided with traffic control devices or otherwise are permitted to operate like public streets, detectable warnings should be provided at the junction between the pedestrian route and the street.

R304 Detectable Warning Surfaces

R304.1 General. Detectable warnings shall consist of a surface of truncated domes aligned in a square or radial grid pattern and shall comply with R304.

R304.1.1 Dome Size. Truncated domes in a detectable warning surface shall have a base diameter of 23 mm (0.9 in) minimum to 36 mm (1.4 in) maximum, a top diameter of 50 percent of the base diameter minimum to 65 percent of the base diameter maximum, and a height of 5 mm (0.2 in).

Advisory R304.1.1 Dome Size. Where domes are arrayed radially, they may differ in diameter within the ranges specified.

R304.1.2 Dome Spacing. Truncated domes in a detectable warning surface shall have a center-to-center spacing of 41 mm (1.6 in) minimum and 61 mm (2.4 in) maximum, and a base-to-base spacing of 17 mm (0.65 in) minimum, measured between the most adjacent domes.

Advisory R304.1.2 Dome Spacing. Where domes are arrayed radially, they may differ in center-to-center spacing within the range specified.

R304.1.3 Contrast. Detectable warning surfaces shall contrast visually with adjacent gutter, street or highway, or walkway surfaces, either light-on-dark or dark-on-light.

Advisory R304.1.3 Contrast. Contrast may be provided on the full ramp surface but should not extend to the flared sides. Many pedestrians use the visual contrast at the toe of the ramp to locate the curb ramp opening from the other side of the street.

R304.1.4 Size. Detectable warning surfaces shall extend 610 mm (24 in) minimum in the direction of travel and the full width of the curb ramp (exclusive of flares), the landing, or the blended transition.

R304.2 Location and Alignment

R304.2.1 Perpendicular Curb Ramps. Where both ends of the bottom grade break complying with R303.3.4 are 1.5 m (5.0 ft) or less from the back of curb, the detectable warning shall be located on the ramp surface at the bottom grade break. Where either end of the bottom grade break is more than 1.5 m (5.0 ft) from the back of curb, the detectable warning shall be located on the lower landing.

Advisory R304.2.1 Perpendicular Curb Ramps. Detectable warnings are intended to provide a tactile equivalent underfoot of the visible curbline; those placed too far from the street edge because of a large curb radius may compromise effective crossing analysis.

R304.2.2 Landings and Blended Transitions. The detectable warning shall be located on the landing or blended transition at the back of curb.

R304.2.3 Alignment. The rows of truncated domes in a detectable warning surface shall be aligned to be perpendicular or radial to the grade break between the ramp, landing, or blended transition and the street.

Advisory R304.2.3 Alignment. Where a ramp, landing, or blended transition provides access to the street continuously around a corner, the vertical rows of truncated domes in a detectable warning surface should be aligned to be perpendicular or radial to the grade break between the ramp and the street for a 1.2 meter-wide (4.0 ft) width for each crosswalk served.

R304.2.3 Rail Crossings. The detectable warning surface shall be located so that the edge nearest the rail crossing is 1.8 m (6 ft) minimum and 4.6 m (15 ft) maximum from the centerline of the nearest rail. The rows of truncated domes in a detectable warning surface shall be aligned to be parallel with the direction of wheelchair travel.

R305 Pedestrian Crossings

R305.1 General. Pedestrian crossings shall comply with R305.

R305.2 Crosswalks. Crosswalks shall comply with R305.2 and shall contain a pedestrian access route that connects to departure and arrival walkways through any median or pedestrian refuge island.

R305.2.1 Width. Marked crosswalks shall be 1.8 m (6 ft) wide minimum.

R305.2.2 Cross Slope

R305.2.2.1 Crossings with Stop Control. The cross slope shall be 2 percent maximum.

R305.2.2.2 Crossings without Stop Control. The cross slope shall be 5 percent maximum.

R305. 2.2.3 Midblock Crossings. The cross slope at midblock crossings shall be permitted to be warped to meet street or highway grade.

R305.2.3 Running Slope. The running slope shall be 5 percent maximum, measured parallel to the direction of pedestrian travel in the crosswalk.

ABAAS: http://www.access-board.gov/ada-aba/final.htm#pgfId-1006509

705 Detectable Warnings

705.1 General. Detectable warnings shall consist of a surface of truncated domes and shall comply with 705.

705.1.1 Dome Size. Truncated domes in a detectable warning surface shall have a base diameter of 0.9 inch (23 mm) minimum and 1.4 inches (36 mm) maximum, a top diameter of 50 percent of the base diameter minimum to 65 percent of the base diameter maximum, and a height of 0.2 inch (5.1 mm).

705.1.2 Dome Spacing. Truncated domes in a detectable warning surface shall have a center-to-center spacing of 1.6 inches (41 mm) minimum and 2.4 inches (61 mm) maximum, and a base-to-base spacing of 0.65 inch (17 mm) minimum, measured between the most adjacent domes on a square grid.

705.1.3 Contrast. Detectable warning surfaces shall contrast visually with adjacent walking surfaces either light-on-dark, or dark-on-light.

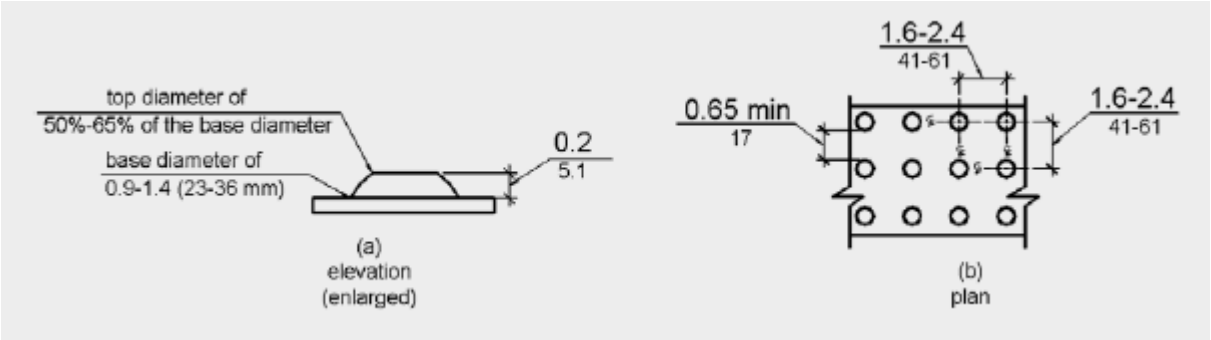

Figure 705.1 Size and Spacing of Truncated Domes

705.2 Platform Edges. Detectable warning surfaces at platform boarding edges shall be 24 inches (610 mm) wide and shall extend the full length of the public use areas of the platform.