ECN	LTR	REVISION	BY	DATE	CHD
E6961	V	3584S 1600 RELEASED FOR PRODUCTION	WG	[illegible]	AN
E6961	W	.33 X .47, .33 X .56, .25, .33 WIDE .250 KATO.	WG	[illegible]	AN
E6961	W	.330X .375, .250, .330, ADDED TOLERANCE BLOCK	WG	[illegible]	AN
E6960	X	REMOVED DIM. NOT FOR P/N'S 3584S1425 & 3584S1525 ONLY	WG	[illegible]	AN
E6960	X	.50 ADDED DIST CHANNEL HOLE DIM, WIDE, 1.00 TYP, WIDE 1.00	WG	[illegible]	AN
C4596	Y	3584S1425 & 3584S1525 MOVED TO 3584S ASSY DWG.	WG	[illegible]	
C2007	L	ADDED SPRING TO ISL	DK	[illegible]	MH
E4469	M	ADDED P/N 3584S1525	JMF	[illegible]	DK
C3253	N	ADDED TWO SLOTS TO ATTACHMENT RAIL.	JMF	[illegible]	MPP
E5308	P	ADDED P/N 3584S 2000	MPP	[illegible]	RW
E5308	O	ADDED P/N 3584S 1525NL.	RW	[illegible]	MPP
E6271	R	ADDED P/N 3584S1525	K.L.	[illegible]	KKL
E6611	S	P/N 3584S1525 ADDED	K.L.	[illegible]	KKL
C4454	T	VIEW SHOWING HOLE DIM FOR P/No. 3584S1425	K.L.	[illegible]	
C4454	T	3584S1525 ADDED, DIM .88/.71 ADDED.	K.L.	[illegible]	
C4454	T	DIMS .330 & .250 WIS .375 & .340	K.L.	[illegible]	
E6960	U	3584S 1425 RELEASED FOR PRODUCTION	WG	[illegible]	
E2506	B	RD' 1.00 WAS 1.000 ±.015	WD	[illegible]	
E2587	C	ADD P/N 3584S1425, RELEASED FOR PRODUCTION	GB	[illegible]	KRS
C-868	D	ADD P/N 3584S1800 (E2860)	GB	[illegible]	KRS
C-883	E	.250 SQUARE, .375 CSK WIDE .240, .350 PER EIF	BM	[illegible]	KRS
C-883	E	3584S1600, 3584S1575 WIDE .240/.460, .350X.570 – EIF	BM	[illegible]	KRS
E2835	F	ADD P/N 3584S1625	GB	[illegible]	KRS
C1299	G	REVISED NARROW CHANNEL	PTP	[illegible]	GB
C-1246	H	DELETED P/N 3584S1425	GB	[illegible]	RB
E3360	J	ADDED P/N 3584S1625	GB	[illegible]	KRS
E3361	K	ADDED P/N 3584S1425 BACK DWG DIM	TRK	[illegible]	KRS

3544S 1425 & 3544S 1525
OUTER CHANNEL HOLE DETAIL

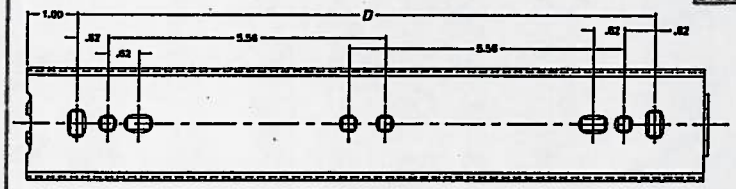

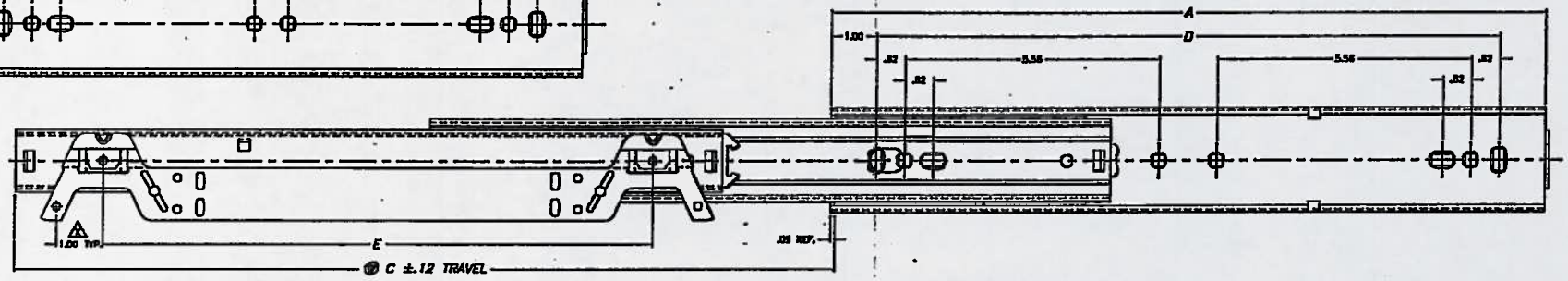

LH SLIDE ASS'Y

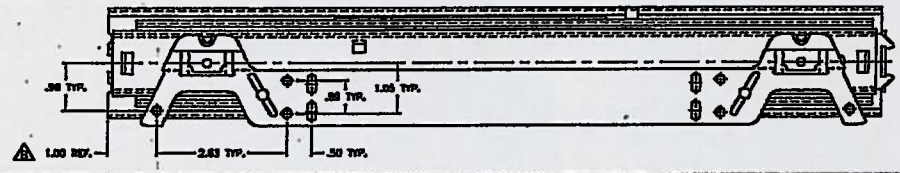

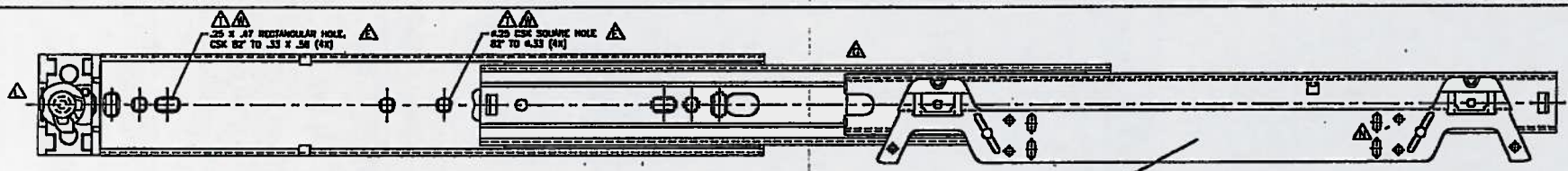

BALLS ORDERED SEPERATELY FOR 3530 GTC ETC (ZINC)
3531 GTC ETC (BLACK)

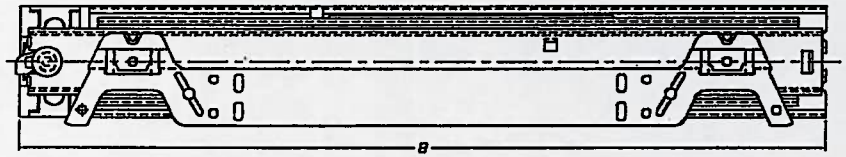

RH SLIDE ASS'Y

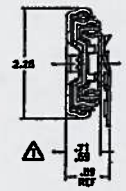

FRONT VIEW LEFT HAND

FRONT VIEW RIGHT HAND

FINISH	ASSY NO.	A	B	C	D	E
BLACK CHROMATE	3584S 1625	X	16.25	17.25	13.63	12.00
	3584S 1625NL	15.63	16.25	17.88	13.63	12.00
	3584S 2000	19.63	20.50	21.38	17.63	15.00
	3584S 1625	15.63	16.25	17.25	13.63	12.00
	3584S 1625	15.63	16.25	17.25	13.63	12.00
ZINC CHROMATE	3584S 2000	19.63	20.50	21.38	17.63	15.00
	3584S 1800	17.38	18.00	19.00	15.00	12.00
	3584S 1625	15.63	16.25	17.88	13.63	12.00
	3584S 1625	15.63	16.25	17.88	13.63	12.00
	3584S 1525	14.63	15.25	16.38	11.63	9.00
	3584S 1425	13.63	14.25	14.88	11.63	9.00

DO NOT SCALE PRINT — PROJECTION — SCALE 1:250 — SHEET SIZE

ComX WATERLOO

TOLERANCES UNLESS DIMENSIONS SPECIFIED: .XX ± .030, .XXX ± .020, .XXXX ± .010, ANGLE ± 1°

DESCRIPTION: SLIDE ASSEMBLY ISL

DWG No. 3584S ASSY

DRW WD — DATE 01/20/95 — CHKD

MATERIAL: CUSTOMER DRAWING

PATHNAME: G:\3500\3584SASS

4. SPECIFICATIONS ARE SUBJECT TO CHANGE WITHOUT NOTICE
3. WIDTH OF SLIDE IS MEASURED WHERE CHANNELS ARE FULLY SUPPORTED BY BALL BEARINGS
2. CRITICAL ATTRIBUTES SHOWN Ⓐ
1. FINISH : SEE CHART

ECN	LET.	REVISION	BY	DATE	CKD
E2344	A	RELEASED FOR TOOLING AND CUSTOMER APPROVAL	WD	FEB 02/95	
E2344	B	RELEASED FOR PRODUCTION	GB	MAY 18/95	KRS
C-820	C	3/16" HEX/SQR COMBINATION WAS 3/16" HEXAGON	WD	AUG 13/98	TRK
C1729	D	ADDED: .43 REF, PERMISSIBLE SINK	WD	SEP 01/98	TRK
C3208	E	REVISED 3320 181 & 3320 180 PICTORIALLY	JMF	OCT 30/00	

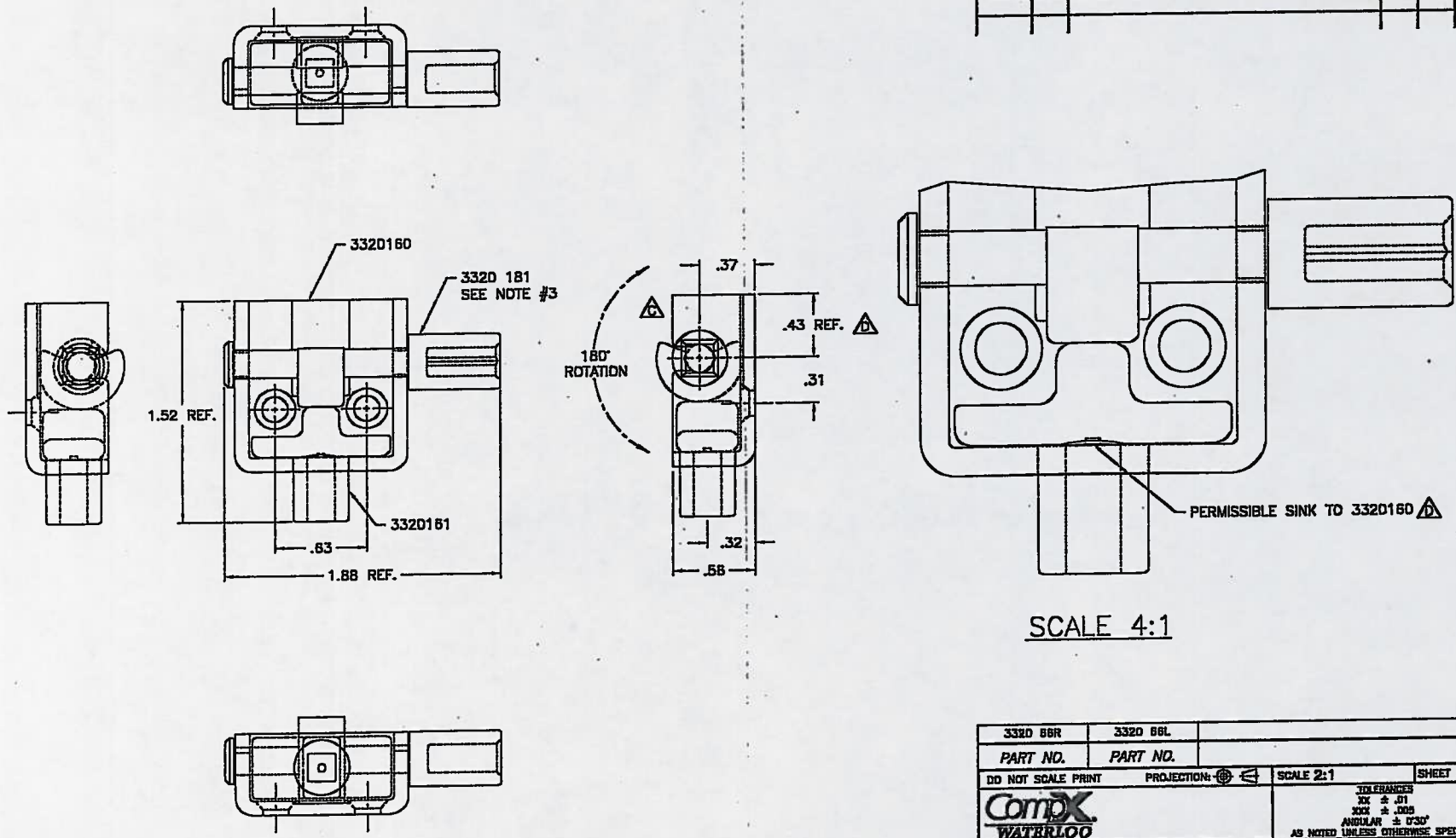

SCALE 4:1

3. PART 3320 181 TO ROTATE 180° FREELY WITHIN 3320 160
2. RH ASSEMBLY SHOWN, LH ASSEMBLY OPPOSITE.
1. FINISH :

3320 66R	3320 66L		
PART NO.	PART NO.		
DO NOT SCALE PRINT	PROJECTION:	SCALE 2:1	SHEET SIZE C
ComX WATERLOO		TOLERANCES XX ± .01 XXX ± .005 ANGULAR ± 0°30' AS NOTED UNLESS OTHERWISE SPECIFIED	
DESCRIPTION LOCK BRACKET ASS'Y. 1 SIDE ISL		DWG No. 3320 66R	
		DWN' WD	DATE 01/30/95	CHK'D
MATERIAL: SEE DWG			
PATHNAME: G:\3320\3320 66R		P/D: 10/30/00	

ECN	LET.	REVISION	BY	DATE	CKD
E2470	A	332008C WAS E2470008C, @ 3.731 ±.005 WAS 4.867, ADDED CRITICAL ATTRIBUTE, RELEASED FOR TOOLING	WD	FEB. 06/95	-
E2470	B	BARE FINISH WAS ZINC FINISH	WD	MAY 15/95	
E2470	C	.04 WAS .044, ADD NOTE 3 AND 4, REMOVED ▼	GB	MAY 24/95	
E2470	C	ADD P/N 332008C0687	GB	MAY 24/95	KRS
C1095	D	P/N 332008C0701 WAS 332008C0687, 7.008 WAS 6.856	KRS	MAY 08/96	
E3456	E	ADDED CHART AND NEW LENGTH 12.00	TR	DEC 22/97	MH
E4279	F	ADD P/N 332008C0892, ADD CHART, REDRAWN	MH	OCT 28/99	PP
E4238	G	ADD P/N 332008C0706	MH	NOV 02/99	BCW
E4584	H	ADD P/N 332008C0300 & CHARTED 'B' DIMENSION	DK	JUL 28/00	JMF
E5101	K	ADD P/N 332008C0776	IM	JUL 06/01	JF
C3411	L	ADDED DIMENSION B AND NOTE	SL	AUG 21/01	

STAMP FORM DIE WITH #T-3189
STAMP OFFSET DIE WITH #T-3190

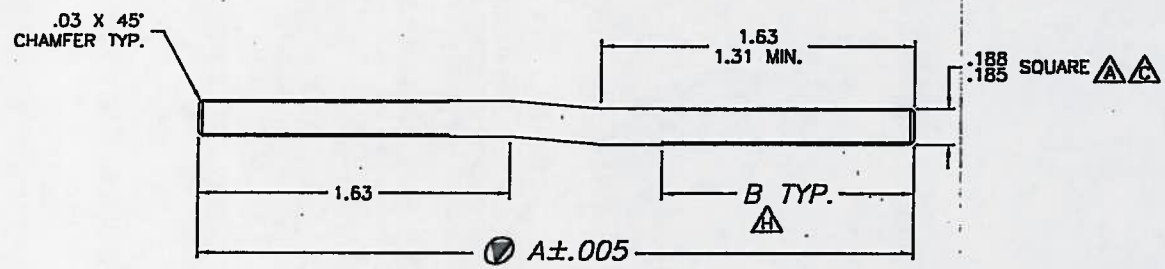

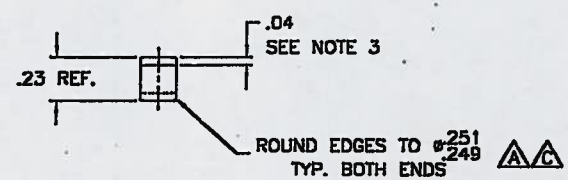

"OFFSET STYLE"

SCALE 2:1

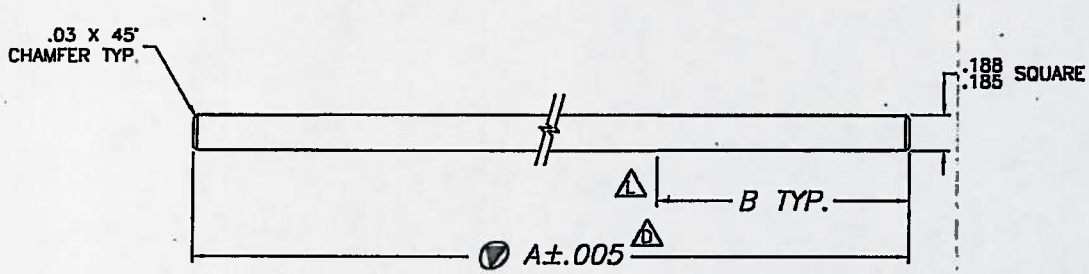

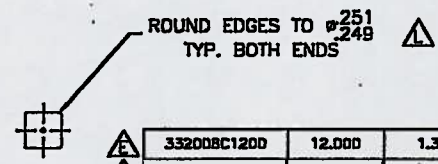

Rod length= Slide center to Lock Bracket com center less 2.025"

"STRAIGHT STYLE"

SCALE 2:1

	PART NO.	A	B	STYLE
E	332008C1200	12.000	1.31	STRAIGHT
F	332008C0892	8.917	1.31	STRAIGHT
K	332008C0776	7.756	1.31	STRAIGHT
G	332008C0706	7.060	1.31	STRAIGHT
C D	332008C0701	7.008	1.31	STRAIGHT
A	332008C	3.731	1.31	OFFSET
H	332008C0300	3.000	.88	OFFSET

DO NOT SCALE PRINT PROJECTION: SCALE 1.000 SHEET SIZE C

ComX WATERLOO

INCH TOLERANCES (MM)
XX ± .01 [X] ± .25
XXX ± .005 [XX] ± .13
ANGULAR ± 0°30'
AS NOTED UNLESS OTHERWISE SPECIFIED

DESCRIPTION
LOCK CONNECTING ROD
1 & 2 SIDE ISL

DWG No. 3320 08C ETC A

DWN' WD DATE 12/06/94 CHK'D

MATERIAL: .1875 SQUARE CRS OR EQUAL

PATHNAME: G:\3320\332008C P/D: 20 AUG 01

4. MAXIMUM .015 PART OFF DIMPLE ALLOWABLE AT EACH END
3. OFFSET TO BE PARALLEL WITHIN .010
2. CRITICAL ATTRIBUTES SHOWN AS ▼
1. FINISH : ZINC B

EDN	LET.	REVISION	BY	DATE	CKD
E3690	A	RELEASE FOR TOOLING	K.S.	[illegible]	M.H.
E3690	B	REVISED DRAWING TO SHOW RECESS	M.H.	[illegible]	P.P.
E3690	C	ADDED CHAMFER, .175 BECOMES .188	M.H.	[illegible]	P.P.
E3690	D	REMOVED CHAMFER, .188 BECOMES .180	M.H.	[illegible]	P.P.
E3690	E	ADD 45° CHAMFER, ⓥ.198 WAS ⓥ.180	K.S.	[illegible]	M.H.
E3690	E	RELEASE FOR PRODUCTION	K.S.	[illegible]	M.H.
C1841	F	1.168 WAS 1.170±.005, 1.498 WAS 1.500±.005	M.H.	[illegible]	PP
C1870	G	DIM. .190 / .37 WAS .198 / .38, TOL. [illegible] WAS [illegible]	DS	[illegible]	MH
C1870	G	NATURAL WAS GREY, MOVE R.06 TO LEFT SIDE	DS	[illegible]	MH
C1870	H	GREY WAS NATURAL	DK	[illegible]	MH
C4142	J	MATL WAS ZYTEL 70G33L	K.L.	[illegible]	KKL
C4786	K	ADDED PATENT INFORMATION TO DRAWING	WG	[illegible]	AN
C4786	L	MODIFIED PATENT INFORMATION	AN	[illegible]	WG
C4786	M	REVISED PATENT INFO LOCATION	AN	[illegible]	[illegible]

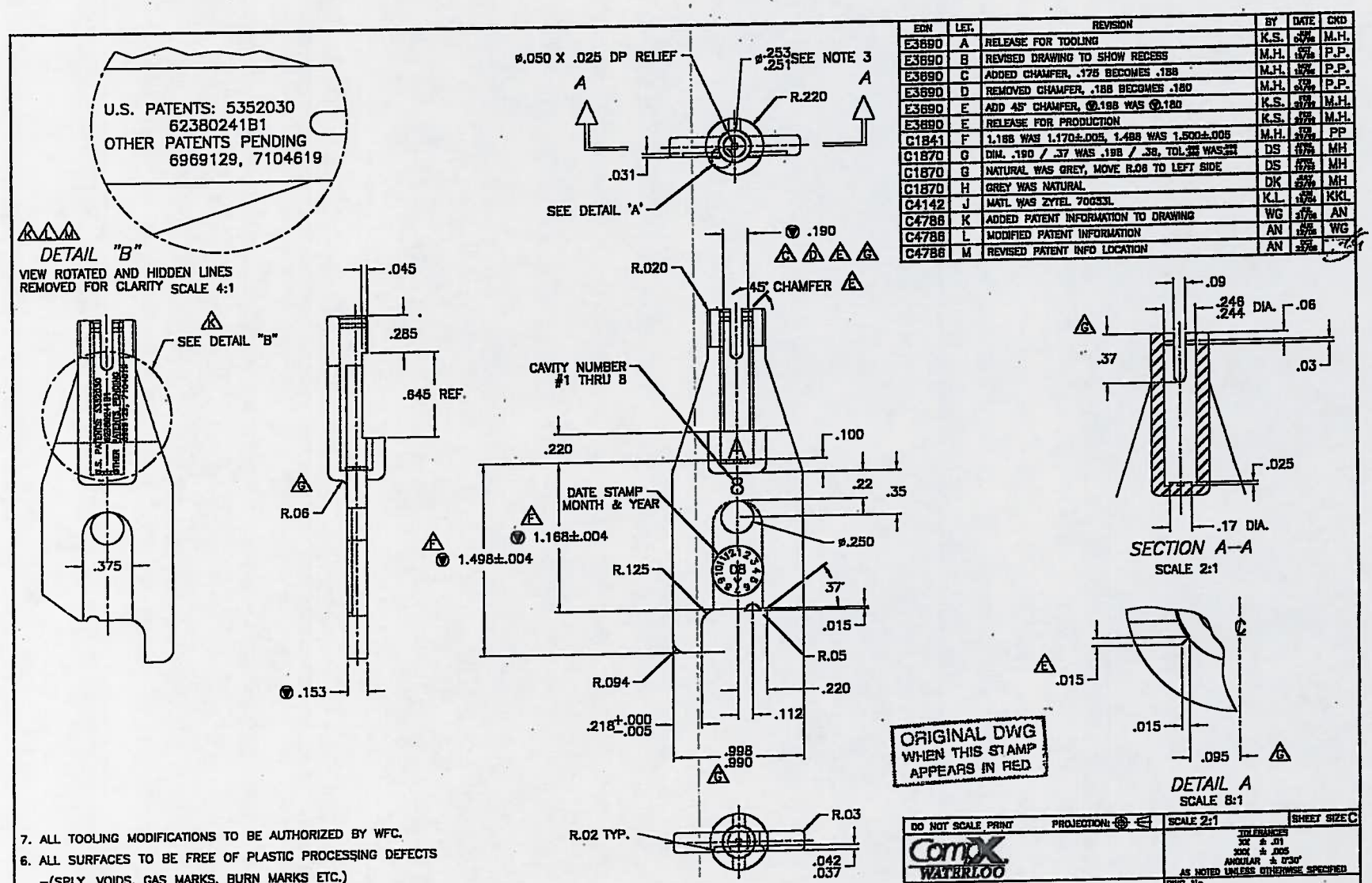

ORIGINAL DWG WHEN THIS STAMP APPEARS IN RED

7. ALL TOOLING MODIFICATIONS TO BE AUTHORIZED BY WFC.
6. ALL SURFACES TO BE FREE OF PLASTIC PROCESSING DEFECTS –(SPLY, VOIDS, GAS MARKS, BURN MARKS ETC.)
5. MAXIMUM RE-GRIND 20%
4. FLASH UNACCEPTABLE AT PARTING LINE.
3. NO DRAFT ANGLE PERMISSIBLE.
2. ⓥ INDICATES CRITICAL-TO-FUNCTION DIMENSION.
1. FINISH : NONE

DO NOT SCALE PRINT	PROJECTION:	SCALE 2:1 — SHEET SIZE C
CompX WATERLOO		TOLERANCES XX ± .01 XXX ± .005 ANGULAR ± 0°30' AS NOTED UNLESS OTHERWISE SPECIFIED
DESCRIPTION CONNECTING STUB "A" W/ SNAP FEATURE		DWG No. 3310186
		DWN K.S. — DATE 08/22/98 — CHK'D
MATERIAL: 33% NYLON 6 GREY MOULD		
PATHNAME: G:\3310\3310186		

ECN	LET.	REVISION	BY	DATE	CKD
C-514	A	RELEASED FOR PROTOTYPES	AG	MAY 02/94	KO
C-514	B	ADD .050 R TO "A" STUB	AG	JUN 06/94	KO
C-514	C	.153 WAS .153 +.003 -.000, REL'D FOR PROD	AG	JUN 20/94	KO
C-816	D	.253/.251 WAS .252/.249	GB	JUN 20/95	KRS
C-816	E	ADD RING, ø .243/.241	GB	JUN 20/95	KRS
C-843	F	DELETE RING, ADD RIBS 3 PLACE	GB	JUL 31/95	KRS
C1127	G	REMOVE "A" LETER & REPLACE BY .250 DIA. HOLE	BM	JUNE 07/96	
C1127	G	.248/.246 WAS .245/.243	BM	JUNE 07/96	KRS
C1220	H	RELEASED FOR PRODUCTION	GB	JUNE 06/97	KRS
C1841	J	1.168 WAS 1.170±.005, 1.498 WAS 1.500±.005	MH	FEB 28/98	RW
C1870	K	DIM. .37 WAS .38, TOL. [illegible] WAS [illegible]	DS	APRIL 15/98	RW
C4142	L	MATL WAS ZYTEL 70G33HSIL	K.L.	JUN 15/04	KL
C4786	M	ADDED PATENT INFORMATION	WG	JUL 31/06	AN
C4786	N	MODIFIED PATENT INFORMATION	AN	AUG 12/06	WG
C4786	P	REVISED PATENT INFO LOCATION	AN	OCT 22/06	

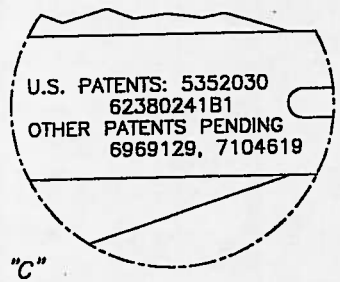

M N P

DETAIL "C"

VIEW ROTATED AND HIDDEN LINES REMOVED FOR CLARITY SCALE 4:1

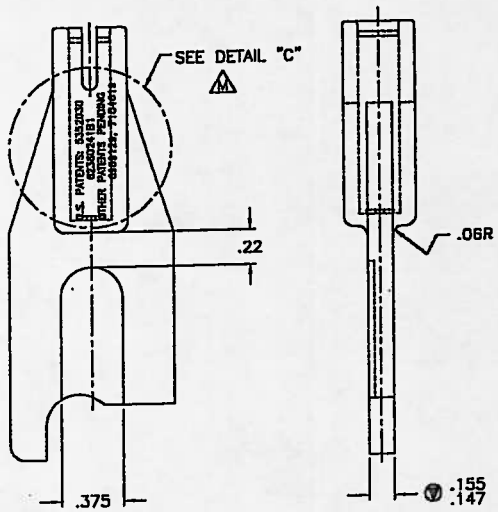

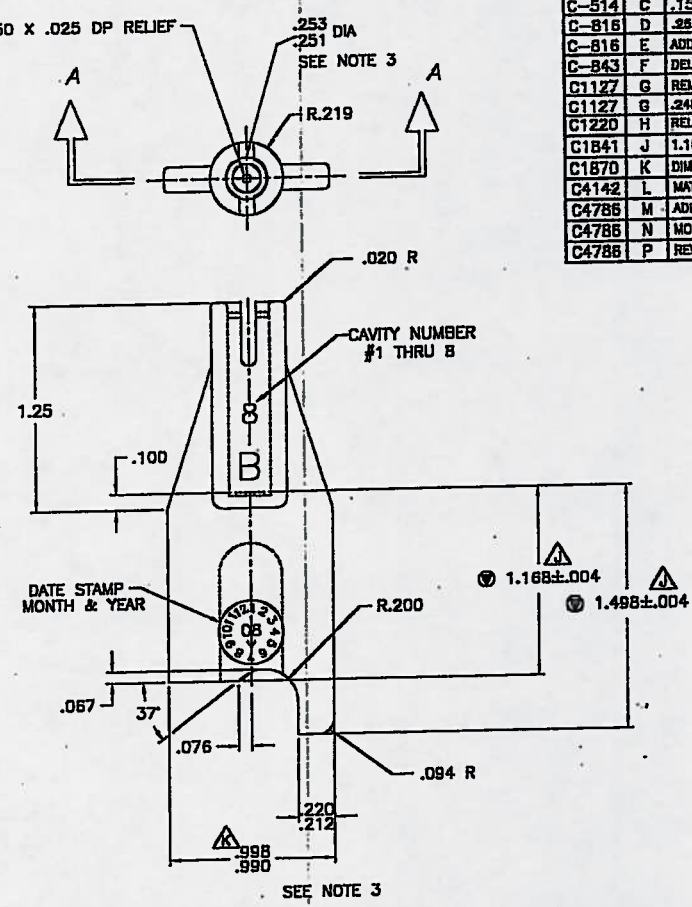

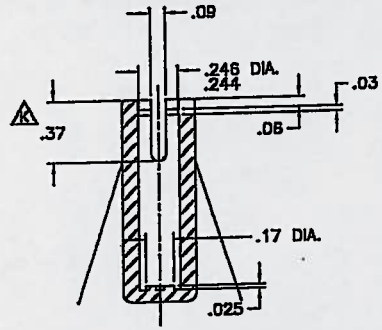

SECTION A–A

SCALE 2:1

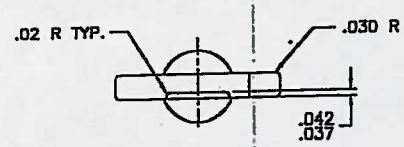

ORIGINAL DWG
WHEN THIS STAMP
APPEARS IN RED

7. ALL TOOLING MODIFICATIONS TO BE AUTHORIZED BY WFC.
6. ALL SURFACES TO BE FREE OF PLASTIC PROCESSING DEFECTS –(SPLY, VOIDS, GAS MARKS, BURN MARKS ETC.)
5. MAXIMUM RE-GRIND 20%
4. FLASH UNACCEPTABLE AT PARTING LINE.
3. NO DRAFT ANGLE PERMISSIBLE.
2. ▼ INDICATES CRITICAL-TO-FUNCTION DIMENSION.
1. FINISH : NONE

DO NOT SCALE PRINT	PROJECTION:	SCALE 2:1 — SHEET SIZE C
CompX WATERLOO		TOLERANCES: XX ± .01, XXX ± .005, ANGULAR ± 0°30' AS NOTED UNLESS OTHERWISE SPECIFIED
DESCRIPTION: CONNECTING STUB "B"		DWG No. 3310183 B
		DWN KRS — DATE OCT 11/96 — CHK'D KRS
MATERIAL: 33% NYLON 6 BLACK MOULD #M6081		
PATHNAME: G:\3310\3310183B		

ECN	LET.	REVISION	BY	DATE	CKD
E2344	A	332007C WAS E2344007C. ADDED 12.63 LONG, CRITICAL ATTRIBUTE. 13.38 WAS 14.88. RELEASED FOR TOOLING	WD	FEB. 08/95	
E2344	B	ADD N/P 332007C1138, RELEASED FOR PROD.	GB	MAY 18/95	KRS
C1130	C	BARE WAS ZINC CHROMATE	BM	NOV. 17/96	TR
E3362	D	ADD P/N 3320 07C 1269	KNW	AUG 20/97	DMM
E3685	E	ADD P/N 3320 07C 1300 & MATERIAL OPTION	K.S.	JUN 08/98	KRS
E4006	F	ADD P/N 3320 07C 1256	M.H.	MAR 03/99	PTP
E4262	G	ADD P/N 3320 07C 1900	M.H.	OCT 28/99	PTP
E4279	G	ADD P/N 3320 07C 1496	M.H.	OCT 29/99	PTP
E4631	H	ADD P/N 3320 07C 1713	JMF	OCT 03/00	DK
E5102	J	ADD P/N 3320 07C 1260	IM	JUL 06/01	

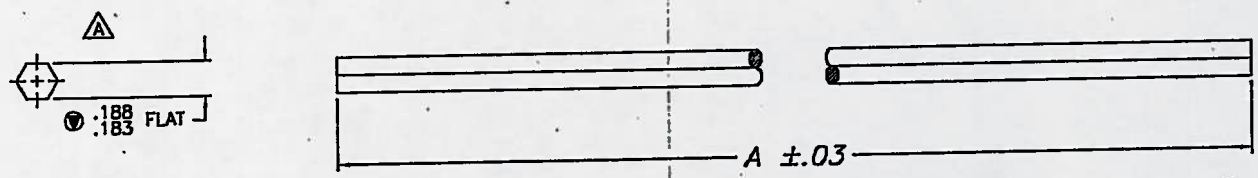

	PART NO.	A		MATERIAL
G	3320 07C 1900	19.00		.1875" ACROSS FLAT COLD FINISH STEEL BAR(C12L15)
	3320 07C 1800	18.00		.1875" ACROSS FLAT COLD FINISH STEEL BAR(C12L15)
	3320 07C 1763	17.63		.1875" ACROSS FLAT COLD FINISH STEEL BAR(C12L15)
H	3320 07C 1713	17.13		.1875" ACROSS FLAT COLD FINISH STEEL BAR(C12)
G	3320 07C 1496	14.96		.1875" ACROSS FLAT COLD FINISH STEEL BAR(C12L15)
A	3320 07C 1338	13.38		.1875" ACROSS FLAT COLD FINISH STEEL BAR(C12L15)
E	3320 07C 1300	13.00		PVC BLACK
J	3320 07C 1260	12.60		.1875" ACROSS FLAT COLD FINISH STEEL BAR(C12L15)
F	3320 07C 1256	12.56		.1875" ACROSS FLAT COLD FINISH STEEL BAR(C12L15)
B	3320 07C 1138	11.38		.1875" ACROSS FLAT COLD FINISH STEEL BAR(C12L15)

DO NOT SCALE PRINT — PROJECTION: — SCALE 1.000 — SHEET SIZE C

ComX WATERLOO

INCH TOLERANCES
.XX ± .01
.XXX ± .005
ANGULAR ± 0°30'
AS NOTED UNLESS OTHERWISE SPECIFIED

DESCRIPTION
1 & 2 SIDE ISL
LOCK TRANSFER ROD

DWG No.
3320 07C ETC

DWN	DATE	CHK'D
WD	08/29/94	

MATERIAL: SEE CHART

PATHNAME: G:\3320\332007C — P/D: 06 JUL 01

3. NOTE : REMOVE SHARP EDGES
2. CRITICAL ATTRIBUTES SHOWN ▼
1. FINISH : BARE C