The Oklahoma Department of Corrections
Contracts & Acquisitions Unit

3400 N. Martin Luther King Blvd, Oklahoma City, OK 73111
Fax (405) 425-2574

Invitation to Bid # 1310003731

Bid Title: Food Service Equipment - OSP

DOC Buyer: Randy Pogue E-mail Address: randy.pogue@doc.state.ok.us

TIMETABLE	Date	Time
ITB/RFP Issue Date:	05/15/2013	
Questions Due by:	05/22/2013	2:00 PM CT
All Amendments will be posted by:	05/28/2013	2:00 PM CT
• CLOSING DATE (PACKET #1 DUE)	06/04/2013	2:00 PM CT

Packet # 1 ***MANDATORY RETURN***	
Page #	Bid Package Contents
1-2	Signatory Form
3	Non-Collusion Certification
4	Professional Services Contract Certification (As Required)
5-9	Responding Bidder Information
10	Audit & Records Clause
1-xx	Request for Quote, Other:

Packet # 2 ***DO NOT RETURN***	
Page #	Package Contents
1-7	General Provisions
	Other:

SUBMIT BID RESPONSES TO:
DEPARTMENT OF CORRECTIONS
CONTRACTS & ACQUISITIONS
P.O. Box 18919
OKLAHOMA CITY, OK 73154

OR

For Courier Service, PHYSICAL:
DEPARTMENT OF CORRECTIONS
CONTRACTS & ACQUISITIONS
2ND FLOOR ROOM 229
3400 N. MARTIN LUTHER KING BLVD
OKLAHOMA CITY, OK 73111

The envelope containing your Bid/Proposal response is to be annotated on the outside front lower left hand corner of the envelope with the contract bid number, closing date and time. If the Bid/Proposal is mailed by special courier (FedEx, UPS, USPS Priority Mail) then the Bid/Proposal response must be enclosed in a separate appropriately marked envelope within the courier's packaging. Failure to provide this information on the envelope may result in the bid not being considered. Do not submit bids by fax or electronically.

SEALED BIDS ARE REQUIRED
THE INVITATION TO BID IS SUBJECT TO CHANGE
There may be one or more amendments to this Bid.
Please do not include any unsolicited items, i.e. business cards, introduction letters unless specifically requested.

OKLAHOMA DEPARTMENT OF CORRECTIONS
REQUEST FOR BID/PROPOSAL
SIGNATORY FORM
Packet # 1

A| SOLICITATION # : 1310003731	**B| FOR: Food Service Equipment - OSP**

C| PURSUANT TO OKLAHOMA STATUTES, REGULATIONS AND EXECUTIVE ORDERS, BIDS/PROPOSALS WHICH FAIL TO CONFORM WITH THE FOLLOWING REQUIREMENTS MAY BE REJECTED BY DOC IF FOUND TO BE MATERIAL

1) ALL QUESTIONS AND CORRESPONDENCE SHALL BE MADE IN WRITING BY E-MAIL OR FAX. ALL PHONE CALLS RECEIVED CONCERNING BIDS WILL BE NOTIFIED TO FOLLOW THIS POLICY.

2) The "Authorized Signature" on all pages of the Solicitation Request should be signed by the bidder's authorized representative.

3) *It is the bidder's sole responsibility, to insure that proposals are received by DOC's Contracts & Acquisition Unit on or before the posted bid/proposal closing date and time*. Under no circumstances will DOC be responsible for vendor's, U.S. mail's or special courier's failure to make timely delivery of the bid response. Official time/date stamp within the DOC Contracts & Acquisition Unit is the Official Time of the bid's delivery and DOC's receipt thereof.

4) The envelope containing your Bid/Proposal response shall be annotated on the outside front lower left hand corner of the envelope with the bid number, closing date, closing time and buyer's name.

5) The Bid/Proposal shall include all price information. Bid/Proposal prices shall include delivery/freight charges of all items (F.O.B. Destination). Price quotes shall be firm through issuance of contract.

6) Bidder's response may not be withdrawn for a period of thirty (30) days after the Bid/Proposal closing date.

7) Bids/Proposals for Services: Work is to commence within ten (10) days after receipt of a Purchase Order unless notified to the contrary either in the DOC's bid or specifications or written authorization from DOC.

8) Bids/Proposals for Products – Products will be delivered within ten (10) days after notification of the award, unless notified to the contrary on the bid, or by written authorization from DOC.

9) All Bid/Proposal prices shall be type or written in ink on the bid/proposal form.

10) All corrections, white-outs, erasures, re-striking or type, or other forms of alteration, or the appearance of alteration, to unit and/or total prices will be initialed in ink by the bidder.

11) The bidder shall complete and submit, and accompanying the Bid/Proposal, the attached Non-Collusion Certification and Signatory page.

12) The Non-Collusion Certification shall be signed and returned with the bid.

13) Subsequent Written Contract: Contract may not be awarded to successful bidder on determination or notice or successful bidder, and may be awarded only after acceptance by DOC of subsequently written contract. If the parties are unable to reach such written agreement, DOC reserves the right to enter into such a written contract with the next successful bidder, or reject all bids and/or rebid the project/request.

14) The Department of Corrections reserves the right to reject any and all bids and responses.

15) Requests for "Tab Sheets" shall be made in writing or by email to the contracting officer and only after bid is awarded.

Signatory Form

OKLAHOMA DEPARTMENT OF CORRECTIONS
REQUEST FOR BID/PROPOSAL
SIGNATORY FORM
Packet # 1

SOLICITATION # : 1310003731

D| ADDITIONAL REQUIREMENTS:

E| THIS SECTION TO BE COMPLETED BY BIDDER

DELIVERY CAN BE MADE _____ DAYS, OR _____ WEEKS AFTER RECEIPT OF PURCHASE ORDER.

Signature of the bidder attests that the bidder has read, understands, and agrees to all terms, conditions, and specifications set forth in the request for bid/proposal, including all addenda, furthermore, signature by the bidder signifies that the request for bid/proposal and the responsive bid/proposal constitutes a contract immediately upon notice of acceptance of the bid/proposal by the state of Oklahoma for any or all of the items bid, and for the length of time indicated in the request for bid/proposal. Failure to accept the contract within the time period indicated in the request for bid/proposal, or failure to hold prices or meet any other terms and conditions as defined in either the request for bid/proposal or during the term of the contracts, shall constitute a breach and may result in suspension or debarment from further state bidding. A defaulting contractor may also be liable, at the option of the state, for the difference between the contract price and the price bid by an alternate vendor or the goods or services in addition to other remedies available.

F| SIGNATURE OF BIDDER	G| NAME OF FIRM
H| PRINT/TYPE NAME AND TITLE	I| DATE

Signatory Form

State of Oklahoma
Department of Corrections

Certification for Competitive Bid and/or Contract
(Non-Collusion Certification)

NOTE: *A certification shall be included with any competitive bid and/or contract exceeding $5,000.00 submitted to the State for goods or services.*

Solicitation or Purchase Order #: _____

Supplier Legal Name: _____

SECTION I [74 O.S. § 85.22]:

A. For purposes of competitive bid,

1. I am the duly authorized agent of the above named bidder submitting the competitive bid herewith, for the purpose of certifying the facts pertaining to the existence of collusion among bidders and between bidders and state officials or employees, as well as facts pertaining to the giving or offering of things of value to government personnel in return for special consideration in the letting of any contract pursuant to said bid;
2. I am fully aware of the facts and circumstances surrounding the making of the bid to which this statement is attached and have been personally and directly involved in the proceedings leading to the submission of such bid; and
3. Neither the bidder nor anyone subject to the bidder's direction or control has been a party:
    a. to any collusion among bidders in restraint of freedom of competition by agreement to bid at a fixed price or to refrain from bidding,
    b. to any collusion with any state official or employee as to quantity, quality or price in the prospective contract, or as to any other terms of such prospective contract, nor
    c. in any discussions between bidders and any state official concerning exchange of money or other thing of value for special consideration in the letting of a contract.

B. I certify, if awarded the contract, whether competitively bid or not, neither the contractor nor anyone subject to the contractor's direction or control has paid, given or donated or agreed to pay, give or donate to any officer or employee of the State of Oklahoma any money or other thing of value, either directly or indirectly, in procuring this contract herein.

SECTION II [74 O.S. § 85.42]:

For the purpose of a contract for services, the supplier also certifies that no person who has been involved in any manner in the development of this contract while employed by the State of Oklahoma shall be employed by the supplier to fulfill any of the services provided for under said contract.

The undersigned, duly authorized agent for the above named supplier, by signing below acknowledges this certification statement is executed for the purposes of:

☐ the competitive bid attached herewith and contract, if awarded to said supplier;

OR

☐ the contract attached herewith, which was not competitively bid and awarded by the agency pursuant to applicable Oklahoma statutes.

Supplier Authorized Signature	Certified This Date
Printed Name	Title
Phone Number	Email
Fax Number	

State of Oklahoma
Department of Central Services
Central Purchasing Division

Professional Services Contract Certification

Solicitation or Purchase Order #: _____

Supplier Legal Name: _____

A. In accordance with 74 O.S. § 85.42, the supplier certifies that no person who has been involved in any manner in the development of this contract while employed by the State of Oklahoma shall be employed by the supplier to fulfill any of the services provided for under said contract.

B. In accordance with 74 O.S. § 85.41, if this contract is for professional services as defined in 74 O.S. § 85.2, and if the final product is a written proposal, report, or study, the supplier further certifies that (s)he has not previously provided the state agency or any other state agency with a final product that is a substantial duplication of the final product of the proposed contract.

_____	_____
Signature	Date
_____	_____
Printed Name	Title

DCS/PURCHASING – FORM 021 (08/2009)

State of Oklahoma
Department of Corrections

Responding Bidder Information

"Certification for Competitive Bid and Contract" ***MUST*** *be submitted along with the response to the Solicitation.*

1. **RE: Solicitation #** _____

2. **Bidder General Information:**

FEI / SSN : _____ VEN ID: _____

Company Name: _____

3. **Bidder Contact Information:**

Address: _____

City: _____ State: ____ Zip Code: _____

Contact Name: _____

Contact Title: _____

Phone #: _____ FAX#: _____

Email: _____ Website: _____

4. **Oklahoma Sales Tax Permit (Required for ALL Solicitations):**

☐ YES – Permit #: _____

☐ NO – Exempt pursuant to Oklahoma Laws or Rules - fill out attached "Sales Tax Statement of Exemption" form on Page 6. For additional assistance: http://www.tax.ok.gov/faq/faqbussales.html

5. **Registration with the Oklahoma Secretary of State (Required If Bid Exceeds $25,000):**

☐ YES - Filing Number: _____

☐ NO - Exempt persuant to Oklahoma Laws or Rules - fill out attached "Secretary of State Statement of Exemption" form on Page 7. For additional assistance: http://www.sos.ok.gov or 405-521-3911.

6. **Workers' Compensation Insurance Coverage (Required for ALL Solicitations):**

Bidder is required to provide with the bid a certificate of insurance showing proof of compliance with the Oklahoma Workers' Compensation Act.

☐ YES – include a certificate of insurance with the bid

☐ NO - Exempt from Workers' Compensation Insurance - fill out attached "Affidavit of Exempt Status Under The Workers' Compensation Act" form on Pages 8-9. For additional assistance: http://www.ok.gov/oid/Consumers/Workers'_Compensation_Information.html

7. **General Liability Insurance Coverage (Required for ALL Solicitations):**

☐ Include a certificate of insurance with the bid

_____ _____

Authorized Signature Date

_____ _____

Printed Name Title

SALES TAX STATEMENT OF EXEMPTION

DATE:_____

FROM: _____
Legal Business Name

SUBJECT: OKLAHOMA SALES TAX EXEMPTION

REF: OKLAHOMA ADMINISTRATIVE CODE 710:65

I hereby claim exemption of the Oklahoma Sales Tax Code. Vendor must state the reason below for claiming exemption.

The Oklahoma Tax code can be found at
http://www.tax.ok.gov/rules/rules.html.

_____

_____

_____

_____

_____

_____

_____

_____

_____
Signed

_____
Printed Name

SECRETARY OF STATE STATEMENT OF EXEMPTION

DATE:_____

FROM: _____
Legal Business Name

SUBJECT: SECRETARY OF STATE EXEMPTION

REF: OKLAHOMA ADMINISTRATIVE CODE 580:16

I hereby claim exemption of the Oklahoma Secretary of State. Vendor must state the reason below for claiming exemption.

For additional assistance: http://www.sos.ok.gov or 405-521-3911.

_____

_____

_____

_____

_____

_____

_____

_____

_____
Signed

_____
Printed Name

AFFIDAVIT OF EXEMPT STATUS UNDER THE WORKERS' COMPENSATION ACT

State of Oklahoma)
)
County of _____)

I, _____ state under oath as follows:

1. I, _____ _____ (Name of individual) operating as _____ (independent contractor's business name), have agreed to provide services to _____ (Contractor) during calendar year_____.
2. I have read, signed and attached the Exempt Status Fact Sheet and understand that an Independent Contractor is one who engages to perform certain services for another, according to his own manner, method, free from control and direction of his contractor in all matters connected with the performance of the service, except as to the result or product of the work.
3. I understand that based upon the representations in this Affidavit of Exempt Status, I am requesting **CompSource Oklahoma's Policyholder** to consider my business to be that of an independent contractor; that **I am not an employee under the Workers' Compensation Act** and the policy issued by **CompSource Oklahoma**; and that no premium be charged for the services performed by my business during the policy year.
4. **I am an independent contractor, not an employee of the contractor. I do not want workers' compensation insurance and understand that I am not eligible for Workers' Compensation benefits.**
5. I will obtain workers' compensation and employers' liability insurance for my employees if I have employees, unless they are otherwise exempt from the requirements of the Workers' Compensation Act.
6. I have read, signed and attached the Exempt Status Fact Sheet describing what is an Independent Contractor and the information provided is not the result of force, threats, coercion, compulsion or duress.
7. I understand that the execution of the affidavit shall establish a rebuttable presumption that the executor is not an employee for purposes of the Workers' Compensation Act.
8. I understand that the execution of an affidavit shall not affect the rights or coverage of any employee of the individual executing the affidavit.
9. I understand that knowingly providing false information on an Affidavit of Exempt Status Under the Workers' Compensation Act shall constitute a misdemeanor punishable by a fine not to exceed One Thousand Dollars ($1,000.00).

Independent Contractor (Executor) Signature

Date_____Name_____Title _____

Signature _____Business Name _____

Notary Public

Signed and sworn to before me on this ____ day of _____, 20___ by _____.

_____ My Commission Expires: _____My Commission # _____
Notary Public

******GIVE THE SIGNED FORM TO YOUR GENERAL CONTRACTOR******

This form is to be signed and notarized at the start of a job/project for this contractor and is good for the job/project or any similar job/project performed for the contractor for one year from the date of notary.

For domestic servants, trucking owner/operators, and other exemptions, please contact CompSource Oklahoma at 405-232-7663 ext. 5102.

Note: Employers who knowingly and willfully require an employee or subcontractor to execute an affidavit when the employer knows that the employee or subcontractor is required to be covered under a workers' compensation insurance policy shall be liable for a civil penalty of up to $1,000.00 per offense. (36 OS §§924.5)

It is a crime to falsify the information on this form.

UF-67 Affidavit IC (Ed. 7-2006) Version 3

EXEMPT STATUS FACT SHEET

An independent contractor is defined by law as one who engages to perform certain services for another, according to his own manner, method, free from control and direction of his contractor in all matters connected with the performance of the service, except as to the result or product of the work.

Below are statements to help you decide if you are an independent contractor. No one statement is controlling, and your status is based on all the facts in your situation. If a statement describes your situation, then check the box. If at least six of the statements below do not describe your business, you should not sign the attached Affidavit of Exempt Status Under the Workers' Compensation Act.

☐ 1. The nature of the contract between you and the contractor shows you are independent from the contractor. For example: Is there a written contract where you agree that you are an independent contractor? Are you a corporation or limited liability company? Do you maintain commercial general liability insurance or other business insurance?

☐ 2. The contractor exercises very little control over your work. For example: By the agreement, can the contractor exercise control on the details of the work or your independence? Do you exercise control over most of the details of the work? Do you create plans or specifications for the job? Do you set your own work hours?

☐ 3. You are engaged in a distinct occupation or business for others. For example: Do you work for companies or individuals other than the Contractor? Do you work for competitors of the Contractor? Does your business have a logo or uniform?

☐ 4. Your job is the kind of occupation where the work is usually performed by a specialist without supervision, and not under the direction of the contractor. For example: Is your work supervised by the Contractor?

☐ 5. Your occupation requires special skills, license, education or training.

☐ 6. The contractor does not supply the things needed to perform your job such as the tools and the place of work. For example: Do you supply any of the materials or tools for the work? Do you operate a vehicle owned by the contractor? Was the work performed at your business or the contractor's business location or jobsite? Do you wear a uniform supplied by the contractor?

☐ 7. The length of the job and how long you have worked for the Contractor does not show that you are really an employee. For example: Is this a one-time job, or will you be doing this for the contractor regularly?

☐ 8. You are paid as a separate contractor, not as an employee. For example: Do you invoice the Contractor for your services? Are you paid by the job? Do you file a federal income tax return for your business? Do you expect to receive an IRS Form 1099 from the Contractor? Does the Contractor pay your expenses?

☐ 9. Your work is not the regular business of the employer. For example: Is your work customarily done in the Contractor's line of business or as part of the Contractor's daily work? Have you ever been an employee of the Contractor? Do you work with other people hired by the Contractor on the work you perform?

☐ 10. You do not consider yourself an employee of the contractor. For example: Will the Contractor withhold taxes or monies from your payment? Have you ever been an employee of the Contractor? Have you or your employees ever filed an insurance claim against the Contractor?

☐ 11. You do not have the right to terminate the relationship without liability. For example: If you quit before the job is finished, is there a penalty?

Based upon these factors, do you believe that you are an independent contractor with exempt status?

_____ Signature _____

(Write YES or NO) (INDEPENDENT CONTRACTOR/EXECUTOR)

Note: Employers who knowingly and willfully require an employee or subcontractor to execute an affidavit when the employer knows that the employee or subcontractor is required to be covered under a workers' compensation insurance policy shall be liable for a civil penalty of up to $1,000.00 per offense. (36 OS §§924.5)

It is a crime to falsify the information on this form.

UF-67 Affidavit IC (Ed. 7-2006) Version 3

OKLAHOMA DEPARTMENT OF CORRECTIONS
Audits & Record Clause
Packet # 1

A| SOLICITATION # : 1310003731	**B| FOR:** Food Service Equipment - OSP

Vendor to complete sections C thru I.

C| Vendor:	

D| Vendor to read the following statement:

a) As used in this clause, records includes books, documents, accounting procedures and practices, and other data, regardless of type and regardless of whether such items are in written form, in the form of computer data, or in any other form, in accepting any contract with the state, the successful bidder agrees any pertinent state or federal agency will have the right to execution of the resultant contract.

B) The successful bidder is required to retain all records relative to this contract for the duration of the contract term and for a period of seven (7) years following completion or termination of the contract. If an audit, litigation, or other action, involving such records, are started before the end of the three year period, the records are required to be maintained for two (2) years from the date that all issues arising out of the action are resolved or until the end of the two (2) year retention period, whichever is later.

E| Signature of Vendor Representative	**F| Phone:**	**G| Date:**
H| Printed Name of Vendor Representative	**I| Title of Representative Signing**	

SOLICITATION REQUEST

☐ Request for Quote ☐ Request for Proposal ☐ Request for Bid **Dispatch via Print**

Request Quote ID.	Date	Buyer	Page
1310003731	04/25/2013	Randy Pogue	1
Payment Terms	**DateTime Quote Open**	**Closing**	
30 Days	05/15/2013 07:13 AM	06/04/2013 02:00 PM	

Requisition Number Reference: From Req ID - 1310015359

Department of Corrections

DEPARTMENT OF CORRECTIONS
3400 MARTIN LUTHER KING AVE
OKLAHOMA CITY OK 731360400

Ship To: DEPARTMENT OF CORRECTIONS
OKLAHOMA STATE PENITENTIARY
1299 STONEWALL & WEST STREET
MCALESTER OK 745020097

Bill To: DEPARTMENT OF CORRECTIONS
OKLAHOMA STATE PENITENTIARY
PO BOX 97
MCALESTER OK 745020097

Vendor:_____
Address:_____
Address:_____
City:_____ST:____ ZIP:_____

Supplier Responses

Line	Cat CD / Item # - Descr	Qty.	UOM	Unit Cost	Ext. Cost
1	48101915 / 1000029595 TRAY: Food service, mulitple compartment, insulated or non-insulated. Must meet FDA requirements for public food service.	912	EA	_____	_____

Food trays for use in an adult correctional facility. Color: Dark Brown. Brand: Cambro 10146DCP or an Approved Equal.

Manufacturer/Brand/Model Bidding: _____

MINIMUM SPECIFICATIONS:
Maximum size: 14.1 inches length x 9.875 inches width x 1.375 inches diameter.
Six compartment tray.
Ability to serve both hot and cold food from the same tray.
Tray with cover separates each compartment to retain food temperatures and reduce spills.
Locking ridges on top of cover and bottom of tray to ensure more secure stacking.
Commercial dishwasher safe. Must withstand a minimum of 180 degrees final rinse cycle.
Stain resistant.
One piece stackable with or without lid.
Can handle temperatures of up to 300 degrees Fahrenheit.

Vendors bidding alternates must submit specifications/brochures.

Manufacturer/Brand/Model bidding: _____

Freight Terms: FOB DEST **Ship Via:** COMMON

Lead Time: _____

Supplier Remarks:

_____

2	48101915 / 1000029595 TRAY: Food service, mulitple compartment, insulated or non-insulated. Must meet FDA requirements for public food service.	96	EA	_____	_____

This is NOT AN ORDER
All returned quotes and related documents must be identified with our request for quote Number.

Authorized Signature

BIDDER SIGN ABOVE

SOLICITATION REQUEST

☐ Request for Quote ☐ Request for Proposal ☐ Request for Bid **Dispatch via Print**

Request Quote ID.	Date	Buyer	Page
1310003731	04/25/2013	Randy Pogue	2
Payment Terms	**DateTime Quote Open**	**Closing**	
30 Days	05/15/2013 07:13 AM	06/04/2013 02:00 PM	

Requisition Number Reference: From Req ID - 1310015359

Department of Corrections

DEPARTMENT OF CORRECTIONS
3400 MARTIN LUTHER KING AVE
OKLAHOMA CITY OK 731360400

Ship To: DEPARTMENT OF CORRECTIONS
OKLAHOMA STATE PENITENTIARY
1299 STONEWALL & WEST STREET
MCALESTER OK 745020097

Bill To: DEPARTMENT OF CORRECTIONS
OKLAHOMA STATE PENITENTIARY
PO BOX 97
MCALESTER OK 745020097

Vendor:_____
Address:_____
Address:_____
City:_____ST:____ ZIP:_____

Supplier Responses

Line	Cat CD / Item # - Descr	Qty.	UOM	Unit Cost	Ext. Cost

Food trays for use in an adult correctional facility. Color: Teal. Brand: Cambro 10146DCP or an approved equal.

MINIMUM SPECIFICATIONS:
Maximum size: 14.1 inches length x 9.875 inches width x 1.375 inches diameter.
Six compartment tray.
Ability to serve both hot and cold food from the same tray.
Tray with cover separates each compartment to retain food temperatures and reduce spills.
Locking ridges on top of cover and bottom of tray to ensure more secure stacking.
Commercial dishwasher safe. Must withstand a minimum of 180 degrees final rinse cycle.
Stain resistant.
One piece stackable with or without lid.
Can handle temperatures of up to 300 degrees Fahrenheit

Vendors bidding alternates must submit specifications/brochures.

Manufacturer/Brand/Model bidding: _____

Freight Terms: FOB DEST **Ship Via:** COMMON

Lead Time: _____

Supplier Remarks:

_____

3 48101915 / 1000029595 1008 EA _____ _____
LID: Food service tray
lid

Food tray lid. To be compatible with items bid on lines 1 & 2. Color: Frost or clear. Brand: Cambro 10146DCPC
Co-polymer or an approved equal.

MInimum Specifications:
Snap on secure fit lid.
Tray and lid combined shall not measure more than 14.1 inches length x 10.25 inches width x 2.55 inches diameter.

Vendors bidding alternates must submit specifications/brochures.

Manufacturer/Brand/Model Bidding: _____

Freight Terms: FOB DEST **Ship Via:** COMMON

Lead Time: _____

Supplier Remarks:

_____

4 24101501 / 1000029596

This is NOT AN ORDER
All returned quotes and related documents must be identified with our request for quote Number.

Authorized Signature

BIDDER SIGN ABOVE

SOLICITATION REQUEST

☐ Request for Quote ☐ Request for Proposal ☐ Request for Bid **Dispatch via Print**

Request Quote ID.	Date	Buyer	Page
1310003731	04/25/2013	Randy Pogue	3
Payment Terms	**DateTime Quote Open**	**Closing**	
30 Days	05/15/2013 07:13 AM	06/04/2013 02:00 PM	

Requisition Number Reference: From Req ID - 1310015359

Department of Corrections

DEPARTMENT OF CORRECTIONS
3400 MARTIN LUTHER KING AVE
OKLAHOMA CITY OK 731360400

Ship To: DEPARTMENT OF CORRECTIONS
OKLAHOMA STATE PENITENTIARY
1299 STONEWALL & WEST STREET
MCALESTER OK 745020097

Vendor:_____
Address:_____
Address:_____
City:_____ST:____ ZIP:_____

Bill To: DEPARTMENT OF CORRECTIONS
OKLAHOMA STATE PENITENTIARY
PO BOX 97
MCALESTER OK 745020097

Supplier Responses

Line	Cat CD / Item # - Descr	Qty.	UOM	Unit Cost	Ext. Cost
	CART: Food tray delivery cart, stainless steel construction.	5	EA	_____	_____

Insulated Tray Delivery Cart. Brand: FWE PTS-NH-1410-108H/or an approved equal. See attachment A for diagram of produt.

Minimum Specifications:
Maximum Dimensions: 69' H x 29.5" D x 66.5" W
Ambient/No Heat
Middle shelves included
Will hold 108 Cambro 10146dCP trays and lids (or approved equal for each) stacked without glides
3 doors/tamper proof access
stainless steel construction /heavy duty push bars, full bumper
upgraded casters to multi-terrain quiet ride
2 rigid, 2 swivel with brakes.

Vendors bidding alternates must submit specifications/brochures.

Brand/Model Number Bidding: _____

Freight Terms: FOB DEST **Ship Via:** COMMON

Lead Time: _____

Supplier Remarks:

COMMENTS:
REQUEST FOR A ONE-TIME PURCHASE. DROP SHIPMENT ONLY.

TERMINATION FOR CAUSE: The supplier may terminate the Contract for default or other just cause with a 30-day written request and upon written approval from DOC. The State may terminate the Contract for default or any other just cause upon a 30- day written notification to the supplier. The State may terminate the Contract immediately, without a 30-day written notice to the supplier, when violations are found to be an impediment to the function of an agency and detrimental to its cause, when conditions preclude the 30-day notice, or when DOC determines that an administrative error occurred prior to Contract performance. If the Contract is terminated, the State shall be liable only for payment for products and/or services delivered and accepted.

TERMINATION FOR CONVENIENCE: The State may terminate the Contract, in whole or in part, for convenience if DOC determines that termination is in the State's best interest. The agency shall terminate the Contract by delivering to the supplier a Notice of Termination for Convenience specifying the terms and effective date of Contract termination. The Contract termination date shall be a minimum of 60 days from the date the Notice of Termination for Convenience is issued by the agency. If the Contract is terminated, the State shall be liable only for products and/or services delivered and accepted, and for costs and expenses (exclusive of profit) reasonably incurred prior to the date upon which the Notice of Termination for Convenience was received by the supplier.

FUNDING: Due to possible future reductions in State and/or Federal appropriations, the Department cannot guarantee the continued availability of funding for this contract. In the event funds to finance this contract become unavailable, either in full or in part, due to such reductions in appropriations, the Department may terminate or reduce the contract in consideration and upon notice in writing to the

This is NOT AN ORDER
All returned quotes and related documents must be identified with our request for quote Number.

Authorized Signature

BIDDER SIGN ABOVE

SOLICITATION REQUEST

☐ Request for Quote ☐ Request for Proposal ☐ Request for Bid **Dispatch via Print**

Request Quote ID.	Date	Buyer	Page
1310003731	04/25/2013	Randy Pogue	4
Payment Terms	**DateTime Quote Open**	**Closing**	
30 Days	05/15/2013 07:13 AM	06/04/2013 02:00 PM	

Requisition Number Reference: From Req ID - 1310015359

Department of Corrections

DEPARTMENT OF CORRECTIONS
3400 MARTIN LUTHER KING AVE
OKLAHOMA CITY OK 731360400

Ship To: DEPARTMENT OF CORRECTIONS
OKLAHOMA STATE PENITENTIARY
1299 STONEWALL & WEST STREET
MCALESTER OK 745020097

Bill To: DEPARTMENT OF CORRECTIONS
OKLAHOMA STATE PENITENTIARY
PO BOX 97
MCALESTER OK 745020097

Vendor:_____
Address:_____
Address:_____
City:_____ST:____ ZIP:_____

Supplier Responses

Line	Cat CD / Item # - Descr	Qty.	UOM	Unit Cost	Ext. Cost

Vendor. The Department shall be the final authority as to the availability of funds. In the event of non-appropriation of discontinuance of funding for this contract, the Vendor will be paid for products and/or services provided up to the effective date of termination.

Security. Contractors employees, agents, and representatives shall comply with all security and identification procedures at DOC facilities. DOC is responsible for alerting Contractor to these requirements prior to the commencement of work.
Security requirements may include, but are not limited to:
Identification: All employees, agents, and representatives of the Contractor, while working on State property, shall carry or display acceptable identification.
Vehicle Security: Drivers must turn off vehicle motors and lock cab doors whenever their truck is unattended. Trucks shall be searched prior to entry and exit, causing up to a 30 minute delay each way.
Offender Contact: Contractors employees, agents, and representatives shall minimize interaction with offenders or patients, and shall report any verbal contact to DOC facility security staff before leaving the site.
Subject to Search: All persons, vehicles, packages and equipment entering a DOC facility are subject to search. Persons are typically pat searched and required to clear metal detection devices. Packages, briefcases, purses, etc.,. searched with x-ray equipment. Drug K-9 may also be used to search persons, vehicles, packages, and equipment.
Contraband: Contractors employees, agents, and representatives shall not have any weapons (including jack knives or box cutters), cell phones, pagers, drugs, tobacco products or any item deemed by facility to be potential contraband. Correctional officers can hold these items for delivery drivers at the delivery sally-port and return them as the driver exits the grounds. Any illegal items shall not be returned and shall be reported to local law enforcement.
Security Clearance: Contractors employees, agents, and representatives who enter secure facilities shall have prior approval to enter from facility security staff, generally involving a background check to ensure that they are not convicted felons. The Contractor shall submit background check requests a minimum of two weeks prior to arriving at the facility. At the facilities discretion, Contractor shall comply with any requests to reassign a Contractor employee, agent, or representative, whether or not the individual has passed the background check if it is determined by facility that there is a security concern.
Tobacco Use Prohibited. The use of tobacco products is prohibited throughout all indoor and outdoor areas of property owned, leased, loaned or under the control of DOC, including parking lots owned or under the control of DOC.

This is NOT AN ORDER
All returned quotes and related documents must be identified with our request for quote Number.

Authorized Signature

BIDDER SIGN ABOVE

ATTACHMENT A

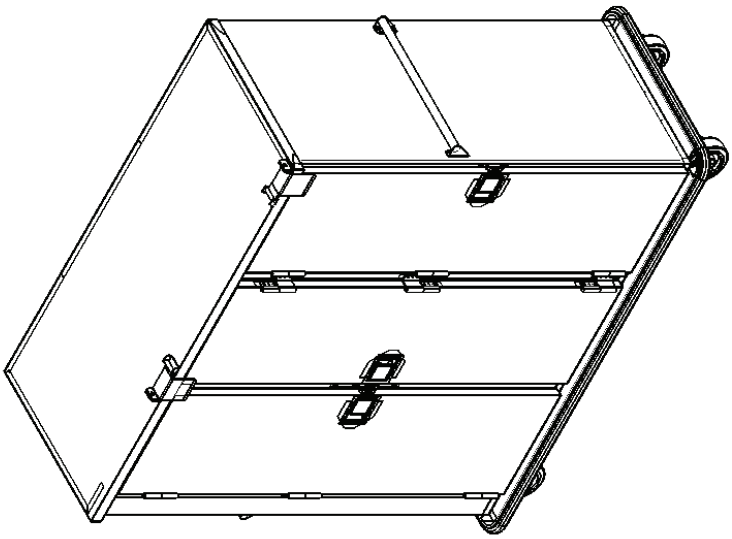

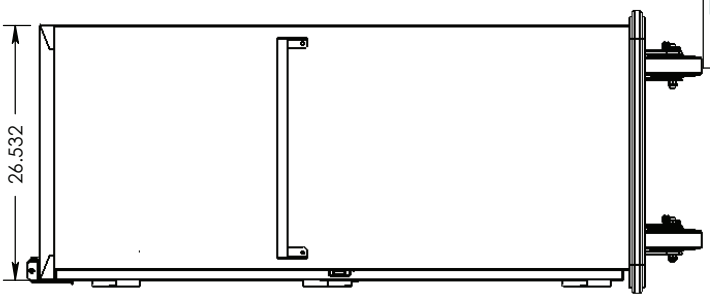

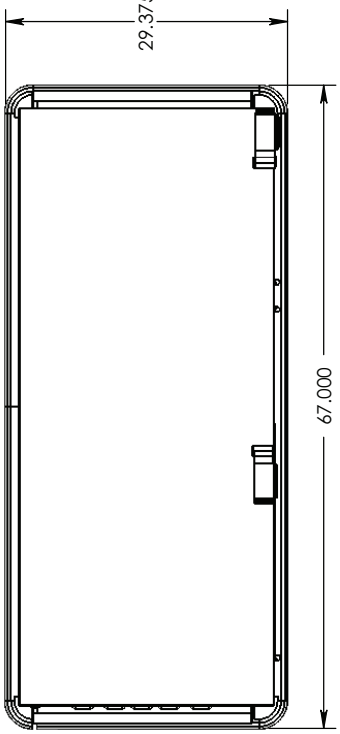

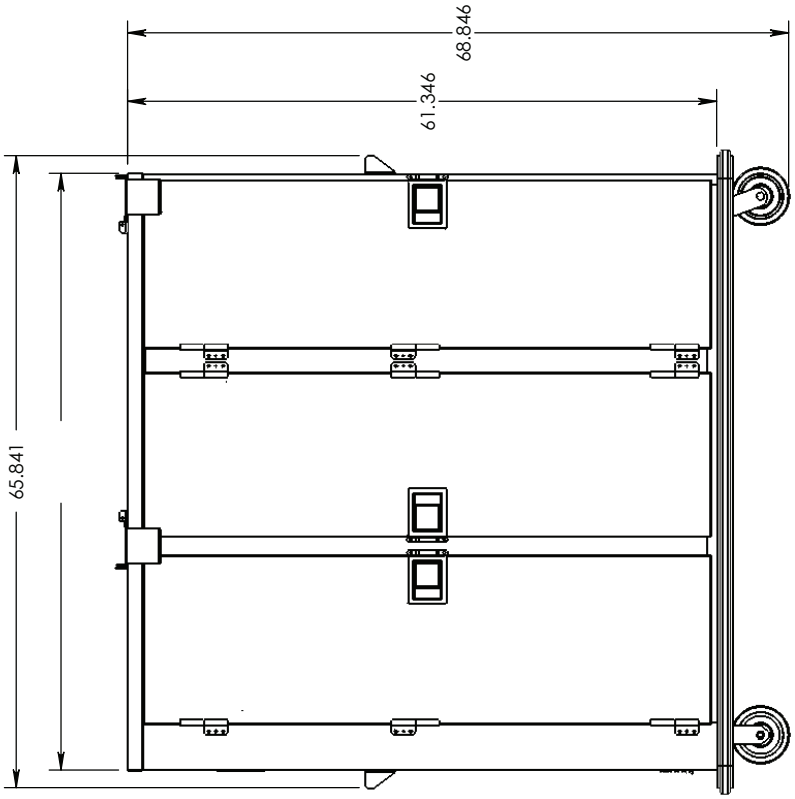

GENERAL PROVISIONS
OKLAHOMA DEPARTMENT OF CORRECTIONS (the State Agency)

1.0 DEFINITIONS

1.1 As used herein, the following terms shall have the following meaning unless the context clearly indicates otherwise:

1.10 "Acquisition" means items, products, materials, supplies and equipment a state agency acquires by purchase, Lease purchase, lease with option to purchase, or rental pursuant to the Oklahoma Central Purchasing Act;

1.11 "Bid" means an offer in the form of a bid, proposal or quote a bidder submits in response to a solicitation;

1.12 "Bidder" means an individual or business entity that submits a bid in response to solicitation;

1.13 "Solicitation" means a request or invitation by the State Purchasing Director or a state agency for a supplier to submit a priced offer to sell acquisitions to the state. A solicitation may be an Invitation to Bid (ITB), Request for Quotation (RFQ) or Request for Proposal (RFP); and

1.14 "Vendor/Supplier" means an individual or business entity that sells or desires to sell acquisitions to state agencies.

2.0 BID SUBMISSION

2.1 Submitted bids shall be in strict conformity with the instructions to bidders, and shall be submitted with any other forms completed as required by the solicitation.

2.2 Bids shall be submitted to the Stage Agency in a single envelope, package, or container and shall be sealed. The name and address of the bidder shall be inserted in the upper left corner of the single envelope, or container. **SOLICITATION NUMBER AND THE SOLICITATION RESPONSE DUE DATE AND TIME MUST APPEAR ON THE FACE OF THE SINGLE ENVELOPE, PACKAGE, OR CONTAINER.**

2.3 The required certification statement, "Certification for Competitive Bid and Contract (Non-Collusion Certification)", DCS-FORM-CP-004, must be made out in the name of the bidder and must be properly executed by an authorized person, with full knowledge and acceptance of all its provisions.

2.4 The required certification statement, "Professional Service Contract Affidavit", DCS-FORM-CP-021 (if applicable), must be made out in the name of the bidder, must be properly executed by an authorized person, with full knowledge and acceptance of all its provisions.

2.5 All bids shall be legibly written or typed. Any corrections made by the bidder, including mark-thru's, white out or any other methods, to the bid shall be initialed. Penciled bids and penciled corrections shall **NOT** be accepted and will be rejected as non-responsive.

2.6 All bids submitted shall be subject to the Oklahoma Central Purchasing Act, Central Purchasing Rules, other Oklahoma statutory regulations as applicable, these General Provisions, any Special Provisions, solicitation specifications, required certification statements, and all other terms and conditions listed or attached herein- all of which are made part of this solicitation.

2.7 Bidders may at their request, bid “ALL OR NONE”. In order to bid “ALL OR NONE” bidders must indicate on the front of the first page of the bid that they are bidding “ALL OR NONE”.

2.8 The State shall assume no responsibility and bears no liability for costs incurred by a bidder in the preparation and submittal of a bid or proposal in response to the ITB/RFQ or RFP.

2.9 Any agreement that bidder will require the Stage Agency to sign prior to purchase under this contract shall be submitted by the bidder with their bid proposal. The Stage Agency reserves the right to reject any agreement that contains provisions inconsistent with state law or policy, or provisions which are determined to not be in the best interest of the state. The Stage Agency will not sign any agreement that is submitted after the award.

2.10 "Any limitation of liability submitted by the vendor does not apply to the extent a court of competent jurisdiction (including any appellate court of final review) determines such limitation of liability violates Oklahoma law, in which case the specific limitation that the court determines is in violation of Oklahoma law shall be void."

3.0 SOLICITATION AMENDMENTS

3.1 If an amendment is issued, then the bidder shall acknowledge receipt of any/all amendment(s) to solicitations by signing and returning the solicitation amendments(s). Amendment acknowledgement(s) may be submitted with the bid or may be forwarded separately. If forwarded separately, amendment acknowledgement(s) must contain the solicitation number and response due date and time on the front of the envelope and must be received by the Stage Agency prior to the solicitation closing date and time. Failure to acknowledge solicitation amendments may be grounds for rejection.

3.2 Oral Agreements: No oral statement of any person shall modify or otherwise affect the terms, conditions, or specifications stated in the solicitation or resulting contract. All modifications to the solicitation or resulting contract must be made in writing and approved by the Stage Agency Contracts & Acquisitions Unit.

3.3 No oral statement of any person shall modify or otherwise affect the terms, conditions, or specifications stated in the solicitation. All amendments to the solicitations shall be made in writing by the Stage Agency.

3.4 It is the Bidder’s responsibility to check frequently for any possible amendments that may be issued. the Stage Agency is not responsible for a bidder’s failure to acquire any amendment documents required to complete a solicitation.

4.0 BID CHANGE

If the bidder needs to change a bid prior to the solicitation response due date, a new bid shall be submitted to the Stage Agency with the following statement “This bid supersedes the bid previously submitted” in a single envelope, package, or container and shall be sealed. The name and address of the bidder shall be inserted in the upper left corner of the single envelope, package, or container. SOLICITATION NUMBER AND SOLICITATION RESPONSE DUE DATE AND TIME MUST APPEAR ON THE FACE OF THE SINGLE ENVELOPE, PACKAGE, OR CONTAINER.

5.0 CERTIFICATION REGARDING DEBARMENT, SUSPENSION, AND OTHER RESPONSIBILITY MATTERS

5.1 By submitting a response to this solicitation, the prospective primary participant and any subcontractor certifies to the best of their knowledge and belief, that they and their principals or participants:

5.1.1 Are not presently debarred, proposed for debarment, suspended, declared ineligible, or voluntarily excluded by any Federal, State or local department or agency;

5.1.2 Have not within a three-year period preceding this proposal been convicted of or had a civil judgment render against them for commission of fraud or a criminal offense in connection with obtaining, attempting to obtain, or performing a public (Federal, State or local) contract; or for violation of Federal or State antitrust statutes or commission of embezzlement, theft, forgery, bribery, falsification or destruction of records, making false statement, or receiving stolen property;

5.1.3 Are not presently indicted for or otherwise criminally or civilly charged by a governmental entity (Federal, State local) with commission of any of the offense enumerated in paragraph of this certification; and

5.1.4 Have not within three-year period preceding this application/proposal had one or more public (Federal, State or local) contracts terminated for cause or default.

5.1.5 Where the prospective primary participant is unable to certify to any of the statements in this certification, such prospective participant shall attach an explanation to its solicitation response.

6.0 BID OPENING

Sealed bids shall be opened by the CPO within the Contracts & Acquisitions Unit, Department of Corrections located at 3400 Martin Luther King Avenue, Oklahoma City, OK 73111 at the time and date specified in the solicitation.

7.0 BIDS SUBJECT TO PUBLIC DISCLOSURE

Unless Otherwise specified in the Oklahoma Open records Act, Central Purchasing Act, or other applicable law, documents and information a bidder submits as part of or in connection with a bid are public records and subject to disclosure. Bidders claiming any portion of their bid as proprietary or confidential must specifically identify what documents or portions of documents they consider confidential and identify applicable law supporting their claim of confidentiality. The Chief Administrative Officer of the requesting agency shall make the final decision as to whether documents or information is confidential.

8.0 LATE BIDS

Bids received by the Stage Agency after the response due date and time shall be deemed non-responsive and shall NOT be considered for any resultant award.

9.0 LEGAL CONTRACT

9.1 Submitted bids are rendered as a legal offer and any bid, when accepted by the Stage Agency, shall constitute a contract.

9.2 The Contract resulting from this solicitation will consist of the following documents in order of preference: Contract award documents, including but not limited to the Purchase Order, Contract Modifications, required certification statement, affidavit, and change order; the solicitation including any amendments; and the successful bid to the extent that the bid does not conflict with the requirements of the Contract award documents or solicitation or applicable law. In the event there is a

conflict between any of the preceding documents, the Contract award documents prevail over the solicitation and both the Contract award documents and the solicitation shall prevail over the successful bid.

10.0 PRICING

10.1 Bids shall remain firm for a minimum of sixty (60) days from the solicitation closing date.

10.2 Bidders guarantee unit prices to be correct.

10.3 In accordance with 74 .O.S. § 85.40, ALL travel expenses to be incurred by the supplier in performance of the Contract shall be included in the total bid price/contract amount.

11.0 MANUFACTURERS' NAME AND APPROVED EQUIVALENTS

Unless otherwise specified in the solicitation, manufacturers' names, brand name, information and/or catalog numbers listed in a specification are for information and not intended to limit competition. Bidder may offer and brand for which they are an authorized representative, which meets or exceeds the specification for any item(s). However, if bids are based on equivalent products, indicate on the bid form the manufacture's name and number. Bidder shall submit sketches, descriptive literature, and complete specifications with their bid. Reference to literature submitted with a previous bid will not satisfy this provision. The bidder shall also explain in detail the reason(s) why the proposed equivalent will meet the specifications and not to be considered an exception thereto. Bids that do not comply with these requirements are subject to rejection.

12.0 CLARIFICATION OF SOLICITATION

Clarification or questions pertaining to the contents of this bid/proposal shall be submitted by mail (address: Department of Corrections, Contracts & Acquisitions, P.O. Box 18919, Oklahoma City, OK 73154-0919), by email to the "Buyer" listed at the top of the "Solicitation Request" or facsimile (Fax number 405-425-2574) to the Department of Corrections Contracts & Acquisitions. Any and all communication must include the ITB/RFQ or RFP number.

13.0 REJECTION OF BID

The State reserves the right to reject any bids that do not comply with the requirements and specification of the solicitation. A bid May be rejected when the bidder imposes terms or conditions that would modify requirements of the solicitation of the solicitation or limit the bidder's liability of the State. Other possible reasons for rejection of bids are listed in OAC 580:15-4-11.

14.0 AWARD OF CONTRACT

14.1 The Stage Agency may award the Contract to more than one bidder by awarding the Contract(s) by item or groups of items, or may award the Contract on an ALL OR NONE basis, whichever is deemed by the State Agency to be in the best interest of the State of Oklahoma.

14.2 Contract awards will be made based on lowest and best evaluation criteria, unless the solicitation specifies that best value criteria are being used. Requests for "Tab Sheets" will be made in writing or by email to the contracting officer.

14.3 In order to receive an award or payments from the State of Oklahoma, suppliers must be registered. The vendor registration process can be completed electronically through the DCS website at the following link: http://www.ok.gov/DCS/Central_Purchasing/Vendor_Registration/index.html

15.0 CONTRACT MODIFICATION

15.1 The Contract is issued under the authority of the Stage Agency who signs the Contract. The Contract may be modified only through a written Contract Modification, signed by the Stage Agency approving official.

15.2 Any change to the Contract, including the addition of work or materials, the revision of payment terms, or the substitution of work or materials, directed by a person who is not specifically authorized by the Stage Agency in writing, or made unilaterally by the Supplier, is a breach of the Contract. Unless otherwise specified by applicable law or rules, such changer, including unauthorized written Contract Modifications, shall be void and without effect, and the Supplier shall not be entitled to any claim under this Contract based on those changes. No oral statement of any person shall modify or otherwise affect the terms, conditions, or specifications stated in the resultant Contract.

16.0 DELIVERY, INSPECTION AND ACCEPTANCE

16.1 Unless otherwise specified in the solicitation or awarding documents, all deliveries shall be F.O.B. Destination. The bidder(s) awarded the Contract shall prepay all packaging, handling, shipping and delivery charges and firm prices quoted in the bid shall include all such charges. All products and/or services to be delivered pursuant to the Contract shall be subject to final inspection and acceptance by the State at destination. "Destination" shall mean delivered to the receiving the State Agency or other point specified in the purchase order. The State assumes no responsibility for goods until accepted by the State at the receiving point in good condition. Title and risk of loss or damage to all items shall be the responsibility of the supplier until accepted by the receiving agency. The supplier(s) awarded the Contract shall be responsible for filling, processing, and collecting and all damage claims accruing prior to acceptance.

16.2 Supplier(s) awarded the Contract shall be required to deliver products and services as bid on or before the required date. Deviations, substitutions or changes in products and services shall not be made unless expressly authorized in writing by the Contracts & Acquisitions Unit.

17.0 INVOICING AND PAYMENT

17.1 Pursuant to 74 O.S. § 85.44(B), invoices will be paid in arrears after products have been delivered or services provided.

17.2 Interest on late payments made by the State of Oklahoma is governed by 62 O.S. §34.71 and 62 O.S. §34.72.

18.0 TAX EXEMPTION

State agency acquisitions are exempt from sales taxes and federal excise taxes. Bidders shall not include the taxes in price quotes.

19.0 AUDITS AND RECORDS CLAUSE

19.1 As used in this clause, "records" includes books, documents, accounting procedures and practices, and other data, regardless of type and regardless of whether such items are in written form, in the form of computer data, or in any other form. In accepting and Contract with the State, the successful bidder(s) agree any pertinent State or Federal agency will have the right to examine and audit all records relevant to execution and performance of the resultant Contract.

19.2 The successful bidder(s) awarded the Contract(s) is required to retain records relative to the Contract for the duration of the Contract and for a period of seven (7) years following completion and/or termination of the Contract. If an audit, litigation, or other action involving such records is started

before the end of the seven (7) year period, the records are required to be maintained for two (2) years from the date that all issues arising out of the action are resolved, or until the end of the seven (7) year retention period, whichever is later.

20.0 NON-APPROPRIATION CLAUSE

The terms of any Contract resulting from the solicitation and any Purchase Order issued for multiple years under the Contract are contingent upon sufficient appropriations being made by the Legislature or other appropriate government entity. Notwithstanding any language to the contrary in the solicitation, purchase order, or any other Contract the State Agency, the Stage Agency may terminate its obligations under the Contract if sufficient appropriations are not made by the Oklahoma Legislature or other appropriate governing entity to pay amounts due for multiple year agreements. The Requesting Agency's decisions as to whether sufficient appropriations are available shall be accepted by the supplier and shall be final and binding.

21.0 CHOICE OF LAW

Any claims, disputes, or litigation relating to the solicitation, or the execution, interpretation, performance, or enforcement of the Contract shall be governed by the laws of the State of Oklahoma.

22.0 CHOICE OF VENUE

Venue for any action, claim, dispute or litigation relating in any way to the Contract shall be in Oklahoma County, Oklahoma.

23.0 TERMINATION FOR CAUSE

23.1 The supplier may terminate the Contract for default or other just cause with a 30-day written request and upon written approval from the Stage Agency. The State may terminate the Contract for default or any other just cause upon a 30- day written notification to the supplier.

23.2 The State may terminate the Contract immediately, without a 30-day written notice to the supplier, when violations are found to be an impediment to the function of an agency and detrimental to its cause, when conditions preclude the 30-day notice, or when the Stage Agency determines that an administrative error occurred prior to Contract performance.

23.3 If the Contract is terminated, the State shall be liable only for payment for products and/or services delivered and accepted.

24.0 TERMINATION FOR CONVENIENCE

24.1 The State may terminate the Contract, in whole or in part, for convenience if the Stage Agency determines that termination is in the State's best interest. The agency shall terminate the Contract by delivering to the supplier a Notice of Termination for Convenience specifying the terms and effective date of Contract termination. The Contract termination date shall be a minimum of 60 days from the date the Notice of Termination for Convenience is issued by the State Agency.

24.2 If the Contract is terminated, the State shall be liable only for products and/or services delivered and accepted, and for costs and expenses (exclusive of profit) reasonably incurred prior to the date upon which the Notice of Termination for Convenience was received by the supplier.

25.0 INSURANCE

The successful bidder(s) awarded the Contract shall obtain and retain insurance, including worker's compensation, automobile Insurance, medical malpractice, and general liability, as applicable, or as required

by State or Federal law, prior to commencement of any work in connection with the Contract. The supplier awarded the Contract shall timely renew the policies to be carried pursuant to this section throughout the term of the Contract and shall provide the State Agency with evidence of such insurance and renewals. Certificate holder will be made out to: Oklahoma Department of Corrections, Contracts & Acquisitions, 3400 N. Martin Luther King Ave, PO Box 11400, Oklahoma City, OK 73136.

26.0 EMPLOYMENT RELATIONSHIP

The Contract does not create an employment relationship. Individuals performing services required by this Contract are not employees of the State of Oklahoma or the State Agency. The supplier's employees shall not be considered employees of the State of Oklahoma nor of the State Agency for any purpose, and accordingly shall not be eligible for rights or benefits accruing to state Employees.

27.0 PRISON RAPE ELIMINATION ACT (§115.17 and (§115.77)

Any sexual assault or sexual misconduct or attempted sexual assault or sexual misconduct between the Contractor, its employees, agents, or representative and an offender is expressly forbidden.

In addition, by accepting a contract with DOC, Contractor attest that no employee, agent or representative of the Contractor who may have direct contact with DOC offenders while performing the requirements of this contract has:

(1) Engaged in sexual abuse in a prison, jail, lockup, community confinement facility, juvenile facility, or other institution (as defined in 42 U.S.C. 1997);
(2) Been convicted of engaging or attempting to engage in sexual activity in the community facilitated by force, overt or implied threats of force, or coercion, or if the victim did not consent or was unable to consent or refuse; or
(3) Been civilly or administratively adjudicated to have engaged in the activity described above. Any contractor who engages in sexual abuse will be prohibited from contact with offenders and will be reported to law enforcement agencies and to relevant licensing bodies.

Any violation of this provision will be reported to law enforcement agencies and to relevant licensing bodies and will result in the filing of criminal charges as warranted. DOC may also terminate the contract immediately when violations are found.

28.0 COMPLIANCE WITH THE OKLAHOMA TAXPAYER AND CITIZEN PROTECTION ACT OF 2007.

By submitting a bid for services, the bidder certifies that they, and any proposed subcontractors, are in compliance with 25 O.S. §1313 and participate in the Status Verification System. The Status Verification System is defined in 25 O.S. §1312 and includes but is not limited to the free Employment Verification Program (E-Verify) available at www.dhs.gov/E-Verify.

29.0 SAMPLES

29.1 Sample submission**.** A solicitation may specify submission of samples of the required items or products when essential to the assessment of product quality during bid evaluation. When required, samples shall be received no later than the date and time specified by the solicitation.

29.2 Sample identification**.** The bidder shall clearly identify the sample the bidder submits by placing the bidder's name, bidder's address, requisition number and closing date/time on both the sample container and on the sample shipping container.

29.3 Sample costs**.** The bidder shall pay costs for the sample and submission to the State Agency.

29.4 Sample requirements**.** A bidder shall submit a sample that represents the quality of the whole.

29.5 Sample tests. Whenever testing is determined necessary by the State Agency Manager of Contracts and Acquisitions, appropriate standard testing procedures will be used. All samples submitted may be subject to consumption or destruction as a result of tests by the State Agency.

29.6 Sample tests costs**.** If the sample a bidder submits fails to meet the specification or standards the solicitation requires, the bidder shall be required to pay testing costs the State Agency incurs.

29.7 Return of sample to bidder**.** If the return of samples is stipulated in a bidder's solicitation response, samples not destroyed by testing shall be returned at the bidder's expense. If the return of samples is not included in the bidder's solicitation response, samples shall become property of the Stage Agency.

30.0 COMPLIANCE WITH APPLICABLE LAWS

The products and services supplied under the Contract shall comply with all applicable federal, state and local laws, and the supplier shall maintain all applicable licenses and permits requirements.

31.0 SPECIAL PROVISIONS

Special Provisions set forth in the "Solicitation Request" apply with the same force and effect as these General Provisions. However, conflicts or inconsistencies shall be resolved in favor of the Special Provisions.