STANDARD OPERATING PROCEDURES

FOR

WATER QUALITY MONITORING AND MEASUREMENT ACTIVITIES

FY 2020 §319 C9-996100-20 Project 6 Output 6.4.2.f

May 31, 2020

OKLAHOMA CONSERVATION COMMISSION
Water Quality Division
2800 N. Lincoln Blvd., Suite 200
Oklahoma City OK 73105
(405) 522-4732

STANDARD OPERATING PROCEDURES
for the
OKLAHOMA CONSERVATION COMMISSION
for
WATER QUALITY MONITORING AND MEASUREMENT ACTIVITIES
FY 2020 §319 C9-996100-20 Project 6 Output 6.4.2.f

Approving Officers:

Name: **Brooks Tramell** – Director of Monitoring, Assessment & Wetlands Programs, Oklahoma Conservation Commission, Water Quality Division

Signature:_____ Date:_____

Name: **Dan Dvorett -** Quality Assurance Officer,
Oklahoma Conservation Commission, Water Quality Division

Signature:_____ Date:_____

Name: **Lynda Williamson –** Environmental Grants Manager, Oklahoma Office of the Secretary of Energy and the Environment

Signature:_____ Date:_____

Name: **Virginia Vietti -** Project Officer, Region VI United States Environmental Protection Agency

Signature:_____ Date:_____

Name: **EPA Approving Official-** Office of Water Quality, Region VI United States Environmental Protection Agency

Signature:_____ Date:_____

TABLE OF CONTENTS

ACOUSTIC DOPPLER CURRENT PROFILER **4**

ALKALINITY MEASUREMENT **9**

AUTOMATED WATER SAMPLER **18**

CHAIN OF CUSTODY AND SAMPLE LABELING **25**

SPECIFIC CONDUCTANCE MEASUREMENT **32**

DATA RECEIPT **37**

DECONTAMINATION FOR AQUATIC NUISANCE SPECIES (ANS) **41**

DEPTH INTEGRATED SAMPLER **45**

DISSOLVED OXYGEN MEASUREMENT **50**

EQUIPMENT, SUPPLIES, AND TRACKING **56**

PROCEDURE FOR COMPLETING FIELD DATA SHEETS **60**

FISH COLLECTION **73**

FLOW MEASUREMENT (METER METHOD) **88**

HABITAT ASSESSMENT **100**

HARDNESS MEASUREMENT **114**

INORGANIC AND BACTERIA SAMPLE COLLECTION **120**

MACROINVERTEBRATE COLLECTION, SUBSAMPLING, AND PICKING **131**

PERIPHYTOMETERS AND PROCESSING FOR CHLOROPHYLL-A **157**

PH MEASUREMENT **167**

PHOTODOCUMENTATION **174**

PHOTODOCUMENTATION **184**

PRO PLUS MULTI-PARAMETER METER **190**

REAGENTS AND STANDARDS SHELF-LIFE **197**

SAFETY GUIDELINES FOR FIELD RESEARCHERS: **199**

SPIKE, DUPLICATE, REPLICATE, AND BLANK SAMPLES/ MEASUREMENTS FOR ROUTINE QA **221**

TEMPERATURE MEASUREMENT **225**

TURBIDITY MEASUREMENT **230**

VEHICLE USE AND MAINTENANCE **236**

WINKLER TITRATION FOR **244**

DATA SHEETS **248**

OKLAHOMA CONSERVATION COMMISSION
WATER QUALITY DIVISION

STANDARD OPERATING PROCEDURE

ACOUSTIC DOPPLER CURRENT PROFILER

(SONTEK)

and

TRIMBLE AG GPS 114

1.0 PROCEDURAL SECTION

1.1 Scope and Application

The Acoustic Doppler Current Profiler (ADCP) is an instrument used to develop and maintain rating curves in order to program automated water samplers at special project monitoring locations. An accurate rating curve is best developed by obtaining flow measurements at as many stream stages as possible during single flow events. This unit will be deployed during run-off events when the streams are elevated and wadeable discharge methods are unsafe.

1.2 Summary of Method

The ADCP will be deployed either from a bridge crossing or a suspended cable/pulley system that will allow the boat to be guided across the stream channel at a given transect. A crew of at least two individuals are required, one to maneuver the boat and a second to record the data on the field computer. Transects are sampled until at least four usable readings are recorded. Measurements are recorded at each quartile of a high flow event in order to generate accurate rating curves at special project sites.

1.3 Health and Safety

Safety precautions will be taken to insure that there is a minimum likelihood of an injury occurring. The vehicle will be equipped with proper signage and caution lights, road cones will be placed to provide the safest work space possible, and field crew members will be outfitted with fluorescent vests and head gear. Special attention must be paid to severe weather. The crew member maneuvering the boat will be equipped with a self-inflating life vest in the event of a fall.

1.4 Cautions

Data collection may be performed at night or during adverse weather events. By sampling on a bridge crossing there is the potential of danger from passing motorists. There is also the possibility that floating debris in the stream may pose a danger to the operator or the equipment.

1.5 Interference

It is important to select appropriate measurement cross sections for stream flow measurements. Many ADCP measurement problems can be solved by moving to a better measurement section. The ideal site must have the following qualities:

1. Cross-section lies within a straight reach, and stream banks are parallel to each other.
2. Velocities are greater than 0.5ft/s and depths are greater than 0.5 ft.
3. Streambed is relatively uniform and free of numerous boulders and heavy aquatic plant growth.
4. Flow is relatively uniform and free of eddies, slack water, and excessive turbulence.
5. Measurement section is relatively close to the gauging station control to avoid the effect of tributary inflow between the measurement section and control and to avoid the effects of storage between the measurement section and control during periods of rapidly changing stage.

It will often be impossible to meet all of the above criteria, and when that is the case, the crew leader must exercise judgment in selecting the best of the sites available for making the discharge measurement.

1.6 Personnel Qualifications

Instruction in standard ADCP methodologies from a relevant source (USGS or Army Corps of Engineers) is necessary. Personnel must also be familiar with River Surveyor software.

1.7 Apparatus and Materials

The ADCP consists of the Trimble Ag GPS, the Sontek ADP, radio transmitter, 12 V battery, and field computer with the River Surveyor software program installed.

Other materials needed include an assortment of hand tools and the appropriate com port adaptor and cables for the field computer and a flash drive for data storage. Also, rope and secure clips for suspending the ADCP from the bridge. In some cases a cable and pulley system may need to be installed prior to data collection.

1.8 Calibration

Calibration of GPS including determination of the magnetic degrees of freedom must be completed before data collection begins. All calibration should be conducted according to equipment manuals.

1.9 Operation and Preparation

General guidelines for **site selection** of an ADCP measurement section are listed below:

1. Desirable measurement sections are roughly parabolic, trapezoidal, or rectangular. Asymmetric channel geometries (for example, deep on one side and shallow on the other) should be avoided if possible as should cross sections with abrupt changes in channel-bottom slope. The streambed cross section should be as uniform as possible and free from debris and vegetation or plant growth.
2. Measurement sections with velocities less than 0.30ft/s should be avoided if it is possible to do so, and an alternative measurement location is available.
3. Depth at the measurement site should allow for the measurement of velocity in two or more depth cells at the start and stop points near the left and right edges of water.
4. A site with turbulent flow, for example, evidenced by standing waves, large eddies, and non-uniform flow lines, should be avoided. This condition is often indicative of non-homogenous flow and violates one of the assumptions required for accurate ADCP velocity and discharge measurements.
5. Measurement sections having local magnetic fields that are relatively large as compared to the Earth's magnetic field should be avoided. Large steel structures such as overhead truss bridges are a common source for these.

The basic approach to **data collection** with the ADCP using River Surveyor software follows:

1. <u>Preliminary</u>
    a. Verify proper mounting of the ADP to the RiverCat.
    b. Connect the ADP communication cable to the computer, usually on COM 1.
    c. As applicable, apply power to the ADP and GPS.
    d. Start the RiverSurveyor program.
2. <u>Establish communication</u>
    a. Use **System Communication/Systems** or Ctrl+S or the Systems icon to set the communication parameters for each of the systems that will be connected to the computer.
    b. Click **Go to ADP User Setup.** The User Setup dialog box will be displayed.
3. <u>Set ADP parameters</u>
    a. In **User Setup**, enter all parameters required for your application.
    b. Set system time.
    c. Calibrate the compass.
    d. Click **OK** to transfer you settings to the ADP.
4. <u>Collect Data</u>
    a. Click **Play** (or press F^) to start data collection, note that this action does not record the data to a file. This action starts the profiler pinging and allows you to make sure the system is operating correctly before recording data. It also gives you depth and velocity data, which is helpful when you are positioning the vessel at the starting location of the transect.
    b. Make sure that River Surveyor is receiving valid data from all connected systems (indicator lights on status bar are green).
    c. Move the vessel to the start point of the transect.
    d. Check the number of valid cells that the system is using. The number of valid cells can be found in the **Track Data** category on the tabular data displays. Ideally there should be at least two valid cells to make a good discharge measurement along the edge sections. This ensures there is enough valid velocity data in the profile to interpolate the unknown velocity in the unmeasured side area. The number of valid cells is shown in the **Discharge Data** tabular display.
    e. When making a discharge measurement, the distance to the bank is critical to determining the unmeasured side areas. As such, you must accurately measure the distance from the ADP to the riverbank.
5. <u>Record Data</u>
    a. To start recording data, click **Record**. Data recording begins immediately to the file name displayed in the **Profile Data** tabular display.

b. The **Start Edge** dialog box will be displayed. Select the start bank and enter the distance to the bank. The convention for bank selection is left bank is the left bank looking down stream and conversely the right bank is the right bank looking downstream. Click **Advanced** to enter any additional required values such as bank shape, headwater elevation, and tail water elevation.
c. Slowly move the vessel from one side of the stream to the other. Try to maintain a relatively slow and steady speed and direction.
d. As the vessel begins to approach the far bank use the **Discharge Data** tabular display to monitor the number of valid cells in the last few profiles. Typically this value will decrease as you get closer to the stream bank. Also, along a steep riverbank, check the signal amplitude in the **Profile Window** to ensure no beam is reflecting off the river bank. When you are sufficiently close to the bank and still have two valid cells, stop the vessel.
e. Accurately measure the distance from the ADP to the stream bank edge.
f. Again click **Record** to sop recording to the data file. You will be prompted to enter the distance from the ADCP to the bank enter this value into the **End Edge** dialog box.

6. Continue or stop data collection
   a. Continue: If you are continuing the process of collecting data
      i. Allow the system to keep running in **Play** mode
      ii. Position the vessel at its "new" start point and repeat the data collection/recording process. The parameters used in the previous measurement will automatically be set to the new measurement. If values change, you can change the appropriate parameters after the measurement has begun.
      iii. The data from each transect are stored in a separate discharge records. These discharge records are shown consecutively in the **Discharge Summary** dialog box. In addition to several parameters for each individual transect, the **Discharge Summary** dialog box shows the computed **Standard Deviation, Absolute Mean,** and **Coefficient of Variation** for all columns in the table.
   b. Stop:
      When you have completed data collection, click **Stop**. You can now choose to review you data.

1.10 Sample Collection
Only data will be collected, as described in steps 4-6 above.

1.11 Sample Handling & Preservation
Only data will be collected, as described in steps 4-6 above.

1.12 Sample Preparation and Analysis
Only data will be collected, as described in steps 4-6 above.

1.13 Troubleshooting
See instruction manuals.

1.14 Data Acquisition, Calculation, & Data Reduction
After data is collected on the field computer, it will be submitted to the OCC Records Manager and stored on the OCC server, which is backed up weekly.

1.15 Computer Hardware & Software
A field computer with the River Surveyor software program installed will be the primary data tool. Data will then be submitted to the OCC Records Manager for storage on the agency's server.

1.16 Data Management & Records Management
1.16.1 Field Notation
Site conditions and data should be recorded on the **Acoustic Profiler Discharge Measurement Sheet** (see SOP Appendix: Data Sheets).
1.16.2 Chain-of-Custody Procedure
There will be no **Chain of Custody** required.

2.0 QA/QC SECTION

2.1 Training

Instruction in standard ADCP methodologies from a relevant source (USGS or Army Corps of Engineers) is necessary. Personnel must also be familiar with River Surveyor software. When ADCP is utilized during monitoring activities, field staff using this equipment will be audited by a supervisor and the QA/QC officer for basic field data collection techniques once per year.

2.2 Maintenance

Regularly inspect all hardware on the ADCP to ensure that it is in good condition. Make sure that the batteries are operational prior to each use.

2.3 QC Procedures

When ADCP is utilized during monitoring activities, all field personnel using this equipment will be evaluated on an annual basis to critique sampling techniques.

If possible, multiple measurements will be made at each stage during a single event to produce the most accurate measurement. Once the curve at a particular location has been developed and employed with the auto-sampler, measurements will be made during flow events adequate to ensure the continued accuracy of the curve. At a minimum, two high flow measurements will be made annually. The goal is to complete one discharge measurement at 25 - 50% of the expected maximum discharge during the rise of an event, a measurement at the highest expected discharge, and a measurement at 25 – 50% of the expected maximum discharge during the subsidence of an event. If discharge measurements vary by more than 10% of the established curve, remediation will occur by way of developing a new curve through the aforementioned process.

When ADCP is utilized during monitoring activities, in accordance with USGS guidelines, a discharge measurement will be taken at a nearby gauging station with a known discharge on a quarterly basis. The measured discharge must be within 5% of the actual discharge to pass QA/QC.

OKLAHOMA CONSERVATION COMMISSION
WATER QUALITY DIVISION

STANDARD OPERATING PROCEDURE

ALKALINITY MEASUREMENT

(Hach Digital Titrator Model 16900-01)

1.0 PROCEDURAL SECTION

1.1 Scope and Application[1][2][3]

Alkalinity is a measure of the acid-neutralizing capacity of water. It is the sum of all the titratable bases. Alkalinity is an aggregate property and can be interpreted in terms of specific substances only when the chemical composition of the sample is known. Although many materials may contribute to the alkalinity, the major contributor of alkalinity in natural water is a function of carbonate, bicarbonate, and hydroxide content. Other constituents, borates, phosphates, silicates, and/or other bases, may contribute to alkalinity, but in most situations, these substances are insignificant and may be ignored. The measured alkalinity value can vary significantly depending on the selected titration end-point.

Alkalinity is important to the biota because it buffers pH changes that occur naturally as a result of photosynthetic activity and other chemical processes. Also, components of alkalinity will complex some toxic heavy metals and reduce their toxicity.

1.2 Summary of Method

The term alkalinity encompasses several different chemical components of water but can be best viewed as the ability of the water to resist a drop in pH, or in another sense, its buffering capacity. The test is performed by slowly titrating a sample with sulfuric acid to a colorimetric endpoint corresponding to a specific pH. Total Alkalinity is determined by the titration to a pH between 3.7 and 5.1, which includes all carbonates, bicarbonates, and hydroxides species. The selected indicator dye changes color within the desired pH range for alkalinity determination. For most analyses, bromcresol green-methyl red is used to indicate a pH endpoint of 4.3 to 5.1. The Hach alkalinity kit makes calculation of the final result simple by using a multiplication factor times the amount of acid added.

1.2.1 Definitions

- Alkalinity = $[OH^-] + [CO_3^{-2}] + [HCO_3^-] - [H^+]$

  Where:
  $[H^+]$ = hydrogen ion concentration
  $[OH^-]$ = hydroxide ion concentration
  $[CO_3^{-2}]$ = carbonate ion concentration
  $[HCO_3^-]$ = bicarbonate ion concentration
  Alkalinity is reported as an equivalent concentration (mg/L) of calcium carbonate ($CaCO_3$).
- Total Alkalinity = Measurement of the alkalinity to the methyl orange or bromcresol green-methyl red endpoint (pH 4.3-5.1).

1.3 Health and Safety Warnings

The titrant acid used with this procedure is sulfuric acid (H_2SO_4). The normality of the acid varies, but 1.6 N and 0.16 N are the commonly used concentrations in the Hach procedure. Sulfuric acid in these concentrations can cause irritations and burns. Protective clothing and eye protection is required during titration process. If a drop gets in your eye, flush thoroughly with whatever water is available. Do not wait until you can get to a source of pure water if none is immediately available.

1.4 Cautions

- Make sure all air bubbles are removed from the delivery tube prior to sample reading.

1.5 Interference[4]

- Highly colored or turbid samples may mask the color change at the endpoint—use a pH meter to determine the endpoint
- Chlorine may interfere with the indicators. Add one drop of Sodium Thiosulfate (0.1 N) to eliminate this effect.

1.6 Personnel Qualification

Field personnel must be trained and evaluated on use of equipment prior to collecting samples or data. Use of the equipment is subject to approval by the QA Officer and/or Monitoring Coordinator. Training will be done through dry run exercises in the laboratory and field to familiarize field personnel with operation/collection, calibration and maintenance. Investigators must be familiar with the SOP document and owner's manual, when applicable.

---

[1] Text taken directly or in part from Standard Methods (APHA, AWWA, WPCF, 1992).
[2] Text taken directly or in part from Sawyer *et al*., 1994
[3] Text taken directly or in part from EPA, 1986
[4] Text taken directly or in part from Hach, 1988

1.7 Apparatus & Materials

- Hach Digital Titrator Model 16900-01
- Titration Cartridges 0.16 N and 1.6 N H_2SO_4.
- 250 mL Erlenmyer flask
- 100 mL graduated cylinder
- indicator dye powder pillows (Bromcresol Green-Methyl Red)

1.8 Instrument/Method Calibration

See QC Section 2.3.

1.9 Equipment Operation & Preparation [4]

1.9.1 Range Selection

- There are two basic ranges associated with the Hach Kit, High Range (1.6 N) and Low Range (0.16 N). The Low Range acid concentration is used when the alkalinity is between 10 – 160 mg/L, and the High Range acid concentration is used when the alkalinity is 100 – 4,000 mg/L. The sample volume will vary depending upon the expected range of alkalinity. See Table 1.

- Generally, alkalinity values will be lower in the eastern half of the state—falling into the Low Range, while most surface waters in the western half will be in the High Range. There will be exceptions, so if you are uncertain it is best to start with the High Range and switch to the Low Range if needed.

- Obviously having some idea of the alkalinity value before you go into the field can save time, but **expect** to do more than one titration to arrive at the final value.

Table 1: Sample volume and titration cartridge concentration determination

Range (mg/L $CaCO_3$)	Sample Volume (mL)	Titration Cartridge (N H_2SO_4)	Catalog Number	Digit Multiplier
10 – 40	100	0.160	14388-01	0.1
40 – 160	25	0.160	"	0.4
100 – 400	100	1.60	14389-01	1.0
200 – 800	50	1.60	"	2.0
500 – 2000	20	1.60	"	5.0
1000 – 4000	10	1.60	"	10.0

1.9.2 Set-up

1. Select the appropriate acid concentration corresponding to the expected sample alkalinity (see Table 1).
2. In order to attach the cartridge, the plunger must be totally retracted. To do this press the plunger release button and slide the plunger all the way to the right. Place cartridge in the end slot and turn slightly to secure.
3. Once the cartridge is in place, slide the plunger forward to meet the cartridge seal.
4. Remove the cap on the cartridge and insert a clean delivery tube as shown in Figure 2.
5. Expel any air by holding the cartridge tip up while turning the delivery knob. Turn delivery knob to flush tube and continue flushing until 10 drops have been evacuated.
6. Use the counter reset knob to turn the digital counter back to zero. Wipe or rinse the tip to remove excess acid.

1.9.3 Measuring Total Alkalinity

1. In most sampling instances, Total Alkalinity will be the only alkalinity measurement needed.
2. Use a graduated cylinder to measure the appropriate volume of sample into a 250-mL Erlenmeyer flask. See Table 1 for sample volume.
3. Add the contents of one Bromcresol Green-Methyl Red Powder Pillow to the sample and swirl to mix. At pH values greater than 5.1 the sample should turn green.
4. Immerse the delivery tube tip in the solution and swirl the flask while titrating. Titrate by turning the delivery knob. Keep turning the knob and swirling the sample until the sample changes to light pink.

5. A stir plate can be used to aid in the titration process. Place a stir bar into the flask and place it on the stir plate. Switch the stir plate on to dissolve the dye powder and/or to swirl the sample during the titration.
6. Titrate to the appropriate endpoint based on the total alkalinity found in the water sample. Refer to Table 2 for a listing of endpoints given the water composition and concentration of alkalinity. A light greenish blue-gray is observed at pH 5.1 (~30 mg/L alkalinity), a violet-gray at pH 4.8 (~150 mg/L alkalinity), and a light pink is observed at 4.5 (~500 mg/L alkalinity). Since the OCC is primarily concerned with total alkalinity concentrations, digital titration is an accepted method. However, certain projects may require a more accurate measurement. When necessary, alkalinity should be determined by potentiometric titration. See the QA Officer for more information.
7. Determine Total Alkalinity concentration by using Equation 1. Record the result on the appropriate field data sheet. All alkalinity values are assumed to be Total Alkalinity unless marked otherwise.
8. If the titration fails, (>400 digital units with 0.16 N or <100 digital units using 1.6 N), change the sample volume or switch to a different concentration of acid. To accomplish the latter, reverse the cartridge installation sequence to remove cartridge and install the different cartridge as directed above. Use a different delivery tube.
9. When completed, rinse the flask, dry all equipment, and remove the cartridge for storage. Always re-cap cartridges.

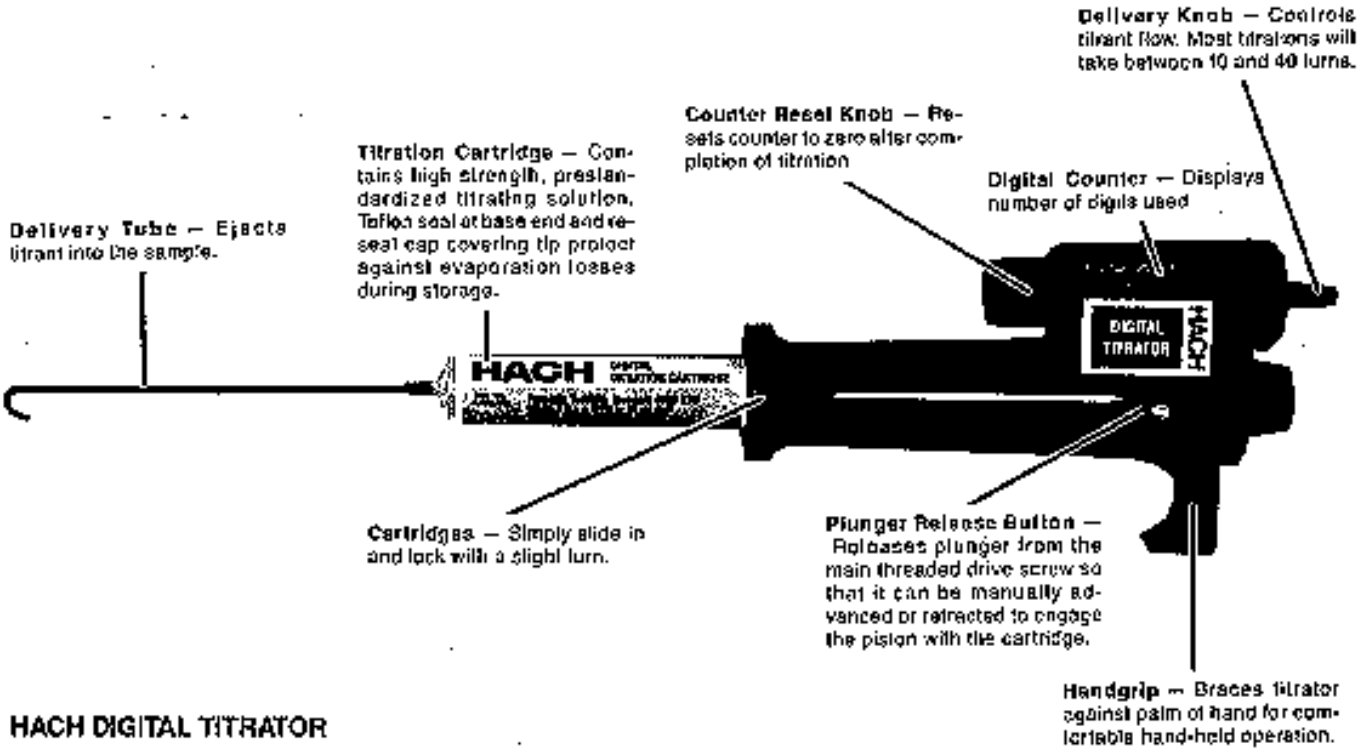

Figure 1 **Hach Digital Titrator with component description (Hach, 1988).**

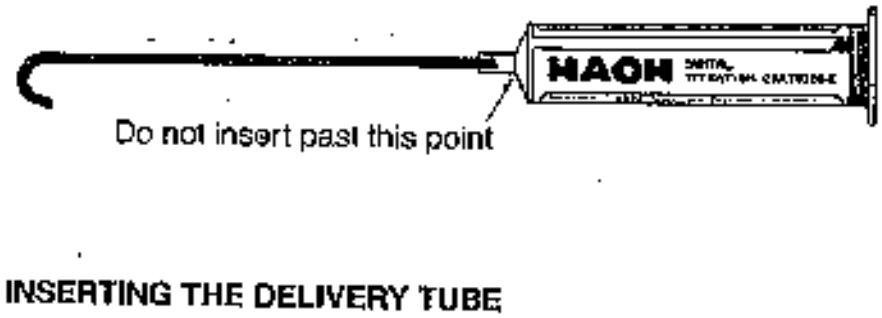

Figure 2 **Hach Digital Cartridge with Delivery tube (Hach, 1988).**

Equation 1 Alkalinity calculation.

Digits Required X Digit Multiplier = mg/L as $CaCO_3$ alkalinity

Where:
Digits Required = number of units displayed on the digital counter
Digit Multiplier = appropriate factor selected from Table 1

Table 2: Sample composition, endpoint pH, and expected color.

Sample Composition; Alkalinity Concentration	Endpoint (presented by APHA et al. 1994)	Endpoint (presented by Hach, 2013)
Alkalinity ~ 30 mg/L	pH 4.9	pH 4.9
Alkalinity ~ 150 mg/L	pH 4.6	pH 4.6
Alkalinity ~ 500 mg/L	pH 4.3	pH 4.3
Silicates or phosphates present	pH 4.5	pH 4.5

1.10 Sample Collection
Water samples should be collected from mid channel, from an area of flowing water. Care should be taken to avoid collection of any surface scum.

1.11 Sample Handling & Preservation
Measurement should be performed in the field at the time of collection. However, if measurement is performed in the laboratory or at a later date, collect the samples in clean glass or HDPE plastic container with zero headspace. Place samples on ice. Avoid excessive agitation or prolonged exposure to air.

1.12 Sample Preparation and Analysis
There is 14 day holding time on alkalinity (EPA, 1982), but Hach (1988) recommends that the samples be read as soon as possible after collection but within 24 hours.

1.13 Troubleshooting
See owner's manuals

1.14 Data Acquisition, Calculation & Data Reduction
Not applicable

1.15 Computer Hardware & Software
Not applicable

1.16 Data Management & Records Management

1.16.1 Field Notation
All alkalinity measurements made at each site should be recorded on the **Site Collection Sheet** (see **SOP Appendix: Data Sheets**). Data should be recorded following procedures outlined in the **Procedure for Completing Field Data Sheets SOP**.

1.16.2 Chain of Custody Procedure
Alkalinity should be measured in the field; therefore, no Chain of Custody form is required. However, if the laboratory is going to measure alkalinity, then follow the procedures described in the **Chain of Custody and Sample Labeling SOP**.

2.0 QA/QC SECTION

2.1 Training

Training of field personnel will be done through dry run exercises in the laboratory to familiarize them with instrument operation, calibration, and maintenance. All operators are required to become familiar with the SOP documents and owner's manual. Prior to solo sample collection, field personnel are evaluated in a field setting for proper use of equipment and sample collection protocol. Annual field audits are performed on sample collectors following procedures outlined in the **Quality Management Plan.**

2.2 Maintenance

- Clean outside of unit with a with moist cloth
- Cap all cartridges
- Keep glassware clean

2.3 QC Procedures

The digital titrator should be checked and calibrated against standards each quarter as directed by the QA officer at a QA and meter calibration session.

The collection of QA samples should follow the procedure specified in the **Preparation of Spike, Duplicate, and Blank Samples for Routine QA SOP**.

3.0 REFERENCES

APHA, AWWA, and WPCF (1992) Standard Methods for the Examination of Water and Wastewater, 17th edition, eds. L.S. Clesceri, A.E. Greenberg, and R.R. Trussell, American Public Health Association, Washington, D.C.

EPA (1986) Quality Criteria for Water, EPA 440/5-86-001, Office of Water, Washington D.C.

Hach (2013) Digital Titrator Model 16900-08 Manual, Hach Company, Loveland, Colorado.

Sawyer, C.N. P.L. McCarty and G.F. Parkin (1994) Chemistry for Environmental Engineering, 4th edition, McGraw-Hill, Inc., New York, New York.

4.0 APPENDIX A

STANDARD OPERATING PROCEDURE
Field Summary

Alkalinity Measurement

Equipment Operation & Preparation

Range Selection

- Select the sample volume and H_2SO_4 Titration Cartridge corresponding to the expected alkalinity concentration as mg/L $CaCO_3$ from Table 1. There are two basic ranges associated with the Hach Kit, High Range (1.6 N) and Low Range (0.16 N). The Low Range acid concentration is used when the alkalinity is between 10 – 160 mg/L, and the High Range acid concentration is used when the alkalinity is 100 – 4,000 mg/L. The sample volume will vary depending on the expected range of alkalinity. See Table 1.
- Generally, alkalinity values will be lower in the eastern half of the state—falling into the Low Range, while most surface waters in the western half will be in the High Range. There will be exceptions, so if you are uncertain it is best to start with the High Range and switch to the Low Range if needed.
- Obviously having some idea of the alkalinity value before you go into the field can save time, but **expect** to have to do more than one titration to arrive at the final value.

Table 1: Sample volume and titration cartridge concentration determination

Range (mg/L $CaCO_3$)	Sample Volume (mL)	Titration Cartridge (N H_2SO_4)	Catalog Number	Digit Multiplier
10 – 40	100	0.160	14388-01	0.1
40 – 160	25	0.160	“	0.4
100 – 400	100	1.60	14389-01	1.0
200 – 800	50	1.60	“	2.0
500 – 2000	20	1.60	“	5.0
1000 – 4000	10	1.60	“	10.0

Set-up

1. Select the appropriate acid concentration corresponding to the expected sample alkalinity (see Table 1).
2. In order to attach the cartridge, the plunger must be totally retracted. To do this press the plunger release button and slide the plunger all the way to the right. Place cartridge in the end slot and turn slightly to secure.
3. Once the cartridge is in place, slide the plunger forward to meet the cartridge seal.
4. Remove the cap on the cartridge and insert a clean delivery tube as shown in Figure 2.
5. Expel any air by holding the cartridge tip up while turning the delivery knob. Turn delivery knob to flush tube and continue flushing until 10 drops have been evacuated.
6. Use the counter reset knob to turn the digital counter back to zero. Shake or rinse the tip to remove excess acid.

Measuring Total Alkalinity

1. In most sampling instances, Total Alkalinity will be the only alkalinity measurement needed.
2. Use a graduated cylinder, measure the appropriate volume of sample into a 250-mL Erlenmeyer flask. See Table 1 for sample volume.
3. Add the contents of one Bromcresol Green-Methyl Red Powder Pillow to the sample and swirl to mix. At pH values greater than 5.1 the sample should turn green.
4. Immerse the delivery tube tip in the solution and swirl the flask while titrating. Titrate by turning the delivery knob. Keep turning the knob and swirling the sample until the sample changes to light pink (endpoint of 4.5).
5. A stir plate can be used to aid in the titration process. Place a stir bar into the flask and place it on the stir plate. Switch the stir plate on to dissolve the dye powder and/or to swirl the sample during the titration.
6. Refer to Table 2 for a listing of endpoints given the water composition and concentration of alkalinity. A light greenish blue-gray is observed at pH 5.1 (~30 mg/L alkalinity), a violet-gray at pH 4.8 (~150 mg/L alkalinity), and a light pink is observed at 4.5 (~500 mg/L alkalinity). Since the OCC is primarily concerned with total alkalinity concentrations, digital titration is an accepted method. However, certain projects may require a more accurate measurement. When necessary, alkalinity should be determined by potentiometric titration. See the QA Officer for more information.
7. Determine Total Alkalinity concentration by using Equation 1. Record the result on the appropriate field data sheet and/or field notebook. All alkalinity values are assumed to be Total Alkalinity unless marked otherwise.
8. If the titration fails, (>400 digital units with 0.16 N or <100 digital units using 1.6 N), change the sample volume or switch to a different concentration of acid. To accomplish the latter, reverse the cartridge installation sequence to remove cartridge and install the different cartridge as directed above. Use a different delivery tube.
9. When completed, rinse the flask, dry all equipment, and remove the cartridge for storage. Always re-cap cartridges.

Equation 1 Alkalinity calculation.

Digits Required X Digit Multiplier = mg/L as $CaCO_3$ alkalinity

Where:
Digits Required = number of units displayed on the digital counter
Digit Multiplier = appropriate factor selected from Table 1

Table 2: Sample composition, endpoint pH, and expected color.

Sample Composition; Alkalinity Concentration	End Point	Color
Alkalinity ~ 30 mg/L	pH 5.1	Light greenish blue-gray
Alkalinity ~ 150 mg/L	pH 4.8	Light violet-gray
Alkalinity ~ 500 mg/L	pH 4.5	Light pink
Silicates or phosphates present	pH 4.5	Light pink

OKLAHOMA CONSERVATION COMMISSION
WATER QUALITY DIVISION

STANDARD OPERATING PROCEDURE

AUTOMATED WATER SAMPLER

(ISCO 6700 and 6712)

and

BUBBLER MODULE

(ISCO 730)

1.0 PROCEDURAL SECTION

1.1 Scope and Application

Autosamplers may be used to collect water samples at regular intervals or to sample water only during elevated flow events (i.e., during or after rainfall). The OCC uses autosamplers for both purposes. All OCC autosamplers are operated in flow-weighted composite mode. The attached bubbler module monitors a stream's water level and flow rate in order to control the sampling intervals. Flow-weighted sampling ensures that more samples are collected during high flow events, which is when nutrient concentrations are highest due to surface runoff and erosion (nonpoint source (NPS) pollution). This allows a more complete, accurate calculation of the total load of certain nutrients in a particular stream reach. Automated sampling equipment is preferred during high flow events because manually collecting samples during or after storms may be difficult and dangerous.

1.2 Summary of Method

After an autosampler is installed at a particular site, it must be programmed so that water will be collected at a regular interval (based on time or flow) or so that collection will be initiated at a certain elevated water level and then continued at a regular interval. In order to program the sampler so that a particular stream is accurately represented as water levels increase or decrease, it is necessary to develop a rating curve. The rating curve is developed from Manning's Equation calculations utilizing data collected from surveying a stream's cross-section and longitudinal profile. If there is a USGS site near the autosampler site that is not above or below a major tributary, it is preferable to use the rating curves developed by the USGS for that reach of the stream, due to increased accuracy.

All OCC samples are "composite" and "flow-weighted;" that is, all samples are emptied into a single jug instead of being kept separate, and the frequency of sample collection is based on flow rate. Regular-interval samples must be retrieved at least once a week, and storm-water samples must be retrieved within 24 hours (or within a reasonable time to allow delivery of the sample to the laboratory within the holding period for the parameters to be analyzed). Refer to project QAPPs for specific parameters and holding times. Water samples (on ice) are mailed to the Oklahoma Department of Agriculture, Food and Forestry (ODAFF) laboratory to be analyzed for nutrients weekly. Maintenance and upkeep of the sampler includes charging the battery regularly, replacing the desiccant as needed, cleaning any debris from the screen and tubing, replacing the pump tubing when it becomes worn, and replacing intake and bubbler tubing as needed.

1.3 Health and Safety Warnings

Concentrated sulfuric acid 10.8M (60%) is used to acidify most samples. Care must be taken when handling this caustic liquid.

1.4 Cautions

Care must be taken when handling concentrated sulfuric acid. If the acid contacts the skin, rinse affected area thoroughly with water.

1.5 Interference

Tubing on the autosamplers may become worn, torn, algae-covered, or clogged, and animals often chew holes in the tubing. All tubing must be checked often to insure proper sampling and data collection. Bubbler tubing especially should be checked regularly, since the sampler will display false readings if there are holes or leaks. Batteries used to operate the autosampler and bubbler module may lose their charge and result in incomplete data collection. Proper battery maintenance and frequent charging should reduce the occurrence of battery failure. The autosampler should be turned off when temperatures are at or below freezing to prevent damage to the apparatus.

1.6 Personnel Qualification

When autosamplers are active, field personnel must be trained and evaluated on use of equipment prior to collecting samples or data. Use of the equipment is subject to approval by the QA Officer. Training will be done through dry run exercises in the laboratory and field to familiarize field personnel with operation/collection, calibration and maintenance. Investigators must be familiar with the SOP document and autosampler manual.

1.7 Apparatus & Materials

The ISCO automated water sampler has the following basic components: programmable operation and memory, water level recorder, sample collection pump, tubing, and sample bottle. A bubbler module (ISCO 730) is also used with this autosampler.

For each weekly site visit, it is advisable to have everything that could possibly be needed to keep the sampler running (i.e., parts such as hosing, intake strainers, etc.). In addition, the following must be brought to the site:

- A fully charged marine battery

- 1 liter collection bottles
- Splitter churns, bring both large and small size
- Dessicant
- Preservation acid (sulfuric) along with a measuring and dispensing device for the acid
- Ice
- Coolers to contain samples
- Bottle labeling marker
- Rapid Transfer Device (for data collection in the field)

1.8 Instrument/Method Calibration

The autosampler/bubbler should be initially calibrated according to the appropriate manual. When autosamplers are active, the unit should then be calibrated weekly. Calibration with regard to correct discharge reading simply consists of programming the sampler to the correct level (either by checking with an instantaneous discharge measurement or checking the USGS real time data). In addition, the sampler has a prompt that will allow calibration of the volume of the delivered sample (15ml). This should be done each week after retrieving the water sample.

1.9 Equipment Operation & Preparation

1.9.1 Installation of the Sampler

1. Investigate the site to consider the width of the channel and the composition of the streambed. Stream bed and bank stability are among the most important considerations for successful long-term autosampler operation. Bridges or armored banks tend to have the best areas for autosampler placement since channels at these locations are generally stable and do not migrate laterally. Also, these areas often offer stable instream habitat (i.e., bedrock and/or cobble), which facilitates the mixing of a sample at the intake placement. If such an area is not an option, areas with stable banks and stable channels should be chosen with suitable flow habitat available within 25-40 feet of the autosampler.
2. Install the sampler in the stream or as close as possible without risk of losing the sampler to eroding banks, debris, etc. Several types of installation can be used (e.g., anchored to post in streambed or attached to wing wall under bridge, etc.); however, the sampler must remain in a level, upright position. The sampler may need to be placed on an elevated platform and within a secure container (e.g., gun safe, barrel, etc.).
3. Judging from the size of the watershed, the restriction of the stream channel, and the perennial or intermittent status of the stream, select an appropriate spot to anchor the intake nozzle and bubbler tube in the stream. If possible, the intake nozzle and the bubbler tube of the sampler need to be in direct flow and facing upstream, parallel to the flow of the stream. To insure that the tubes remain correctly oriented in the stream, tether them to a post which is secured in the stream.
4. Regular window screen should be positioned over the opening of the intake nozzle, leaving an inch of space between the screen and the opening. The edge of the screen needs to be tacked down to seal off all openings under the screen. This keeps trash from plugging the opening and keeps bugs and snails out.
5. Connect the intake nozzle to the sampler unit with the appropriate size tubing to securely seal onto the autosampler and intake fittings. Tubing used for intake must have walls thick and rigid enough to resist collapse during pumping cycles. ISCO supplies tubing of the appropriate thickness but may be substituted with tubing from a local hardware store provided the tubing resists collapse. Make sure that the tubing runs continuously downhill from the sampler to the intake nozzle. In order to protect the tubing from damage by wildlife, enclose both the bubbler tubing and the suction tubing in PVC pipe or other tough material which runs from the sampling site to the sampler unit.
6. Install and program the bubbler module. Rating curves can be acquired through collecting discharges over a period of time or through USGS gauge station data.

1.9.2 Operating the Sampler and Collecting Samples

Initial operation:

1. Remove the autosampler cover to access the pump and control section. Then remove the protective lid over the control panel. Place the 10-liter sample jug inside the sampler base, and add 2 ml of 10.8M (60%) sulfuric acid to the jug.
2. Settings: The sample volume should be set according to the application. The volume will be constant for each pump cycle regardless of the flow of the stream or sampling interval. A true flow-weighted composite comes from collecting a constant volume at a preset discharge interval. For example, 15 ml of sample will be pulled after every 10,000 cubic

feet of water has passed the sampler. Thus, the higher the discharge rate, the more often the sampler pulls a sample. This represents the entire hydrograph for a week as a true composite.

3. A continuous flow-weighted composite autosampler should be programmed to collect a relatively small volume (15 ml) and the collection interval set accordingly to ensure an adequate volume at the end of the sampling period (approximately 2000ml is necessary to rinse and fill a sample bottle). Approximately 140 samples over the week is a good number to aim for. An example follows:

   If a stream is at, and expected to remain near, 25 cfs, then the following calculations will allow the programmer to set the autosampler to ensure an adequate sample volume.

   25 cf/s X 3600s/hr X 24hr/day X 7 day/week = 15,120,000 cf/week

   2000ml/15 ml = 133 samples

   15,120,000/133 = 113,684 cf/sample

   So an interval of 113,684 cf will yield a final sample volume of 2000 ml after 7 days.

4. Test the sampler by initiating the sampling program in the main menu screen. Choose to activate the sampler with no delay to start-up. The first sample should be collected within a few seconds and the autosampler should begin a countdown to the next sample (e.g. 113,684 cf). If the sampler does not activate, check the battery, the fuse, and/or the wiring.
5. Replace the lid over the control panel and the cover. The ISCO should be ready for sampling.

Retrieval of sample and resetting for new sample:

1. Pause sampling cycle. Plug in the Rapid Transfer Device (RTD) so that data can be downloaded (data retrieval may take a while, so it is advantageous to start this immediately).
2. Remove the autosampler cover to access the pump and control section. Then remove the protective lid over the sample jug. Remove the sample jug from the autosampler base. If the sample jug is too full or not full enough (a total sample of at least 2000 ml is necessary), adjust the suction line length switch and/or the volume selection switch for the next sampling cycle.
3. If the volume in the autosampler jug is less than about 2500 ml, cap the autosampler jug and mix the water in the jug. Then, use the sample water to rinse the collection bottle three times, and add the sample (about 1000 ml) to the collection bottle. If the volume in the autosampler jug is greater than about 2500 ml, add contents of the autosampler jug to a clean splitter churn (use either the small or large splitter churn, depending on sample volume in the autosampler jug), mix, rinse, and fill the necessary sample bottles for shipment to the laboratory. Remaining water should be discarded and the autosampler jug cleaned.
4. Add 2 ml of 10.8M (60%) sulfuric acid to the clean sampler jug and place it back into the autosampler base.
5. Replace the battery with a fully charged battery.
6. After the download of data onto the RTD is complete, reset the autosampler by disconnecting the bubbler module, turning the autosampler off and back on, and reconnecting the bubbler module. Enter “Yes” when asked if it is OK if old data is lost. Proceed through programming steps according to the manual and confirm that the discharge readings are accurate.
7. Replace the lid over the control panel and the cover. Resume sampling.
8. Follow maintenance steps (see Section 1.9.3).
9. Ice down the newly collected sample. If shipment is not possible that day, refrigerate and hold the samples overnight and ship the next day.
10. To ship the samples:
    - Place bottles inside a plastic bag and seal.
    - Put another plastic bag inside Styrofoam ice chest and add some ice.
    - Place the first bag with bottles on top of the ice and put more ice on top of this bag.
    - Pull up the second bag (outside bag) and seal it over the bag of bottles.
    - Stuff the top of bag into ice chest and close lid.
    - Secure the lid and entire ice chest with strapping tape and attach label.

If there is rain:

In the event of increased flow (rain), an employee must visit the autosampler to collect water before the end of the week. Storm-water samples should be retrieved within 24 hours. Increased flow during the week will obviously fill the bottle at an increased rate. The programming calculation (above) at higher flow can be used to predict needed visits to ensure that the autosampler bottle does not fill prematurely and cause the sampling to cease. A sample should be taken from the autosampler bottle utilizing a splitter churn, following the protocol described above for retrieving a sample and resetting for a new sample. This should be repeated as many times as necessary during the week, with all samples being stored at less than 4° C until the end of the week. **It is acceptable to adjust the sample interval before the end of the week, provided that a sample is collected following the protocol above, the autosampler bottle is emptied after collection, and the instructions for compositing multiple samples (below) are followed during each visit. Care must be taken to composite all samples based on discharge volumes.**

At the end of the week, all samples collected during the week will be combined based on the proportion of total flow for the entire sampling period (described below) in a clean, sample-rinsed churn, and a single sample will be aliquotted and submitted to the lab for analysis. If three samples were retrieved from the sampler on three different days, each sample would represent a portion of the total flow. This proportion of total flow will be determined from the data report gathered from the sampler during the final visit.

Compositing multiple samples collected at varying flow intervals:

If the sample retrieved on the first visit represented 20% of the total flow, then a sample volume equivalent to 20% of the total volume desired in the churn should be added. The equivalent proportions of sample should be added from each sample.

For example, if three visits were made to collect samples, the sample volume retrieved at each visit would be 1000ml. Once the data from the autosampler is viewed, the total discharge volume for each sampling period is determined. A hypothetical situation may include three samples with corresponding discharge volumes equaling 1,000,000 cf, 2,000,000 cf and 1,000,000 cf, for a total discharge volume of 4,000,000 cf. In this scenario, the 2,000,000 cf represents 50% of the total flow. Since a total of nearly 2000ml is needed to rinse and fill a 1000ml bottle, 1000ml of the sample representing 50% of the flow should be added to the churn. The other two samples each represent 25% of the total discharge, so simple proportion calculations dictate that 500ml of each of these samples be added for a total of 2000ml in the churn. From this composite, a sample bottle should be rinsed, filled, and shipped to the lab following the shipping instructions listed above. This procedure will ensure that all samples submitted to the lab are true flow-weighted, composite samples.

Refer to project QAPPs for specific parameters and holding times.

1.9.3 Maintenance

To prevent malfunctions, weekly maintenance visits are necessary to check batteries, pumps, tubing, sample intakes, and desiccant levels.

1. Check battery water level. If level is low add distilled water. The battery should function for approximately one week before needing to be charged, depending on distance from water and the slope that the water must travel up. The rule of thumb for battery usage is to use the largest marine battery (measured in reserve) that can be handled by the operator. If the sampler is placed higher than 18-20 feet above or more than 35 feet horizontally from the intake, an additional battery may be necessary. The two battery system is employed by connecting the batteries in parallel (positive post to positive post and negative post to negative post) with two short cables. The result is still a 12 volt system with twice the reserve. The batteries can then be connected to the sampler with the typical power cord, making sure to connect the positive terminal with the positive clamp.
2. The pump tube must be replaced approximately every 1,000,000 revolutions (follow the directions in the instruction manual). The autosampler will display the message “Warning! Replace Pump Tube” after 1,000,000 revolutions, but the tube may need to be replaced before or after that time (inspect it regularly for wear). Only ISCO 6712 pump tubing can be used. Reset the count to zero after replacing the pump tube so that correct tallying can resume.
3. Remove any debris or trash from around the suction line and bubbler tubing in the stream. If the intake and/or exhaust tubes are plugged up, they need to be cleared by flushing water through them. This can be done by filling a bottle with water from the stream, attaching it to the stopper, and squeezing the water through the tubes. Be sure water flushes out of both tubes easily. Place a finger over one tube opening and flush water out the other tube and then vice versa. If flushing does not clear the tube, use a small wire or flexible drill to ream out the tubes. Then, try flushing the residue

with water. This can be accomplished by detaching the tube hose at the sampler after the tubing passes through the peristaltic pump. This will allow water to be pumped outside the sampler house for thorough flushing.

4. Periodically, the screen over the intake tube should be cleaned off and checked for holes. When dirty, the screen should be brushed with a wire brush. Replace the screen if necessary.
5. Inspect the desiccant indicator on the lower right hand corner of the control panel and the bubbler module desiccant. If blue, the desiccant is okay. If pink or white the desiccant needs to be changed. Follow the instructions in the owner's manual. The bubbler module desiccant can be recharged. The autosampler desiccant is bagged and is discarded.

1.10 Sample Collection

Water samples should be collected in direct flow. Care should be taken to avoid collection of any surface scum. The splitter churn and all sample bottles should be rinsed thoroughly before being filled. The sampler jug should be cleaned after retrieval of samples.

1.11 Sample Handling & Preservation

Samples must be acidified in order to prevent changes in the water chemistry during the time between actual sampling and analyzing the sample in the lab. Two ml of 60% 18M sulfuric acid should be added to the sample bottle before sampling begins.

1.12 Sample Preparation and Analysis

Water samples (on ice) are mailed to the Oklahoma Department of Agriculture, Food and Forestry (ODAFF) laboratory to be analyzed for nutrients (ammonia, TKN, nitrite, nitrate, total phosphorus, and orthophosphorus) each week.

1.13 Troubleshooting

See instruction manuals.

1.14 Data Acquisition, Calculation & Data Reduction

When autosamplers are active, data must be downloaded at least weekly. The 581 Rapid Transfer Device (RTD) is plugged into the appropriate port during the time of collection and data is downloaded. This procedure is outlined in the manual. Upon reprogramming of the sampler (including modifying an existing program), all data will be lost. This should reduce data stored in sampler memory and reduce the time required for data to transfer from the sampler to the RTD.

The RTD is connected to a PC upon returning to the office. Specialized software (ISCO Textlink) allows the importation of data into an excel spreadsheet which is forwarded via email or CD to the OCC Data Manager. A data summary report is attached to any site data and forwarded to ensure the correct autosampler data is attached by site and date. All data is entered into STORET after being received at the water quality office.

1.15 Computer Hardware & Software

The 581 Rapid Transfer Device (RTD) is used to download data from the autosampler. ISCO Textlink is used to import data into Excel, and STORET is used to store data.

1.16 Data Management & Records Management

1.16.1 Field Notation

All measurements made at each site should be recorded on the **Site Collection Sheet** (see SOP Appendix: Data Sheets). Data should be recorded following procedures outlined in the **Procedure for Completing Field Forms** SOP. Settings should be recorded each time adjustments are made or samples are collected in a waterproof field notebook which is kept in the autosampler housing. This notebook should be submitted to the data manager every December.

1.16.3 Chain-of-Custody Procedure

The procedures described in the **Chain of Custody** and **Sample Labeling** SOP should be followed.

2.0 QA/QC SECTION

2.1 Training

Training of field personnel will be done through dry run exercises in the laboratory to familiarize them with instrument operation, calibration, and maintenance. All operators are required to become familiar with the SOP document and owner's manual. Prior to solo sample collection, field personnel are evaluated in a field setting for proper use of equipment and sample collection

protocol. When autosamplers are active, annual field audits are performed on sample collectors following procedures outlined in the Quality Management Plan.

2.2 Maintenance

- Clean outside of unit with a with moist cloth
- Regularly inspect battery, desiccant, and all tubing

2.3 QC Procedures

When autosamplers are active, all field personnel will be evaluated on an annual basis to critique sampling techniques. The autosampler/bubbler should be calibrated weekly by programming it to collect samples at the correct interval for that site (either by checking with an instantaneous discharge measurement or checking the USGS real time data).

OKLAHOMA CONSERVATION COMMISSION
WATER QUALITY DIVISION

STANDARD OPERATING PROCEDURE

CHAIN OF CUSTODY AND SAMPLE LABELING

1.0 PROCEDURAL SECTION

1.1 Scope and Application

In order to ensure the integrity of collected samples, all samples must be accurately labeled and accompanied by a Chain of Custody form. From a legal viewpoint, non- or incompletely labeled samples, which are not accompanied by a Chain of Custody form, are invalid. From a practical point of view, it is very easy for a laboratory or a sample handler to misidentify samples that are not clearly labeled. In addition, the Chain of Custody form allows all parties to have the same knowledge of where the samples came from and what needs to be done to them.

1.2 Summary of Method

A Chain of Custody form ensures that the samples are collected, transferred, stored, analyzed, and destroyed only by authorized personnel. Every person that collects, analyzes, or takes responsibility for the samples must sign and date the manifest form. In order to maintain the integrity of the sample it is necessary to be able to trace the possession and handling of the sample. The form includes the project name, samplers, site name, WBID #, the site date and time, the parameters to be analyzed, the number of containers, and any comments or remarks. The manifest tracks the samples from the point of collection through analysis. The document is then filed to serve as a record and a reference.

1.2.1 Definitions

- WBID # waterbody identification number
- Possession[5] A sample is considered to be under a person's custody if it is in the individual's physical possession, in the individual's sight, secured in a tamper-proof way by that individual, or is secured in an area **restricted to authorized personnel.**

1.3 Health and Safety Warnings

None

1.4 Cautions

None

1.5 Interference

- Illegible writing
- Insufficient pressure rendering the "pink" or "yellow" copies difficult to read

1.6 Personnel Qualification

Field personnel must be trained and evaluated on proper labeling and use of the Chain of Custody forms. Use of the manifest is subject to approval by the QA Officer and/or Monitoring Coordinator. Training will be done through dry run exercises to familiarize field personnel with proper use.

1.7 Apparatus & Materials

- Chain of Custody form
- Waterproof ink, ball point pen

1.8 Procedure

1.8.1 Sample labeling:

Every sample collected must be labeled with a minimum of the following information:

- site name
- <u>waterbody identification number (WBID #)</u>
- site date
- site time (The "site time" is when initial activities began at the site.)
- preservatives used
- lead investigator's name

[5] Text taken directly or in part from Standard Methods (APHA, AWWA, WPCF, 1992).

The label should be written on the sample bottle at the time of collection. A permanent marker, such as a sharpie, should be used. Write all the information on the side of the bottle. In addition, include site name, WBID #, site date and time, and parameters to be analyzed (or as much as possible) on the shoulder of the bottle. Also write the site name on the lid. This is important because text written on the sides of the bottle tends to get rubbed-off during transport.

1.8.2 Chain of Custody Forms

There is one Chain of Custody form for all parameters collected, see Figure 1. Obtain the Chain of Custody form from the Data Manager or from a designated location. Fill out the necessary information in the logbook. The **Chain of Custody Check-Out Form** in the logbook requires the following information:

DATE DISTRIBUTED:	Record the date the forms were taken
NAME:	Fill in the name of the person taking the forms. If they are being signed out for someone else, include the name of the person who the forms are being checked out for.
COC # ASSIGNED:	Record the Chain of Custody form number (lower right) for all forms taken.

The Chain of Custody form requires specific information; fill in the following items:

PROJECT:	Record the name of project and Task number.
SAMPLERS:	The form should be signed by the lead investigator.
SITE #:	This field is left blank to allow the lab to record the laboratory tracking or log number.
DATE:	Record the date the sample was collected in MM/DD/YY format.
TIME:	Record the site time in military style. The "site time" is when initial activities began at the site.
SITE LOCATION:	Record the name of the site.
NUMBER of CONTAINERS:	Record the number of sampling containers (bottles, Whirl Pak, etc.) collected at the site.
PARAMETERS TO BE RUN:	On the diagonal lines, record the parameters that need to be analyzed. In the box below the parameter to be run, mark an "X" to signify if the sample needs to be run for that specific parameter.
REMARKS:	In the remarks section (on the right hand side of the page) record the WBID # and any information you feel necessary to aid in the analysis or to clarify the custody procedure. A WBID # is required for all sites.
RELINQUISHED BY:	Each person that is in possession of samples must sign and date the manifest when custody is given to another person. The chain of possession should begin in the upper left signature box. See Section 1.2.1 for the definition of possession.
REMARKS:	In the lower right of the page is a "Remarks" section. Record any other information that may be pertinent to the collection.

1.9 Data Management & Records Management

The person who ultimately delivers the samples to the laboratory for processing should remove the bottom copy (pink colored page) and return it to the OCCWQ office. The copies should be returned to the Data Manager or to a designated location for processing. The next person in possession should keep the yellow copy—if necessary. The white copy should be returned with the analyzed, hardcopy data. Please note, the only exception to this possession sequence is with the DEQ Laboratory—in this case the "white copy" should be taken not the "pink copy".

All Chain of Custody forms are numbered in the lower right corner; thus all forms must be accounted for. DO NOT DESTROY ANY FORMS. If a COC form needs to be voided for any reason, "VOID" through the pages, date and initial and return to the Data Manager for processing.

2.0 QA/QC SECTION

2.1 Training

Training of field personnel will be done through dry run exercises in the laboratory to familiarize them with the proper procedures. All operators are required to become familiar with the SOP documents. Prior to solo sample collection, field personnel are evaluated in a field setting for proper use of equipment and sample collection protocol. Annual field audits are performed on sample collectors following procedures outlined in the **Quality Management Plan**.

2.2 Maintenance

Not applicable

2.3 QC Procedures

Not applicable

3.0 REFERENCES

APHA, AWWA, and WPCF (1992) Standard Methods for the Examination of Water and Wastewater, 17th edition, eds. L.S. Clesceri, A.E. Greenberg, and R.R. Trussell, American Public Health Association, Washington, D.C.

4.0 APPENDIX A

STANDARD OPERATING PROCEDURE
Field Summary

CHAIN OF CUSTODY AND SAMPLE LABELING

Procedure

Sample labeling
Every sample collected must be labeled with a minimum of the following information:

- site name
- waterbody identification number (WBID #)
- site date
- site time in military format. (The "site time" is when initial activities began at the site.)
- preservatives used
- lead investigator's name

The labels should be written at the time of sampling. A permanent marker, such as a sharpie, should be used to write directly on the bottle. Write all the information on the side of the bottle. In addition, include site name, WBID #, site date and time, and parameters to be analyzed (or as much as possible) on the shoulder of the bottle. Also write the site name on the lid. This is important because text written on the sides of the bottle tends to get rubbed-off during transport.

Chain of Custody forms
There is one Chain of Custody form for all parameters collected, see Figure 1. Obtain the Chain of Custody form from the Data Manager or from a designated location. Fill out the necessary information in the logbook. The **Chain of Custody Check-Out Form** in the logbook requires the following information:

DATE DISTRIBUTED:	Record the date the forms were taken
NAME:	Fill in the name of the person taking the forms. If they are being signed out for someone else, include the name of the person whom the forms are being checked out for.
COC # ASSIGNED:	Record the Chain of Custody form number (lower right) for all forms taken.

The Chain of Custody form requires specific information; fill in the following items:

PROJECT:	Record the name of project and Task number.
SAMPLERS:	The form should be signed by the lead investigator.
SITE #:	This field is left blank to allow the lab to record a laboratory tracking or lab log number.
DATE:	Record the date the sample was collected in MM/DD/YY format.
TIME:	Record the site time in military style. The "site time" is when initial activities began at the site.
SITE LOCATION:	Record the name of the site.
NUMBER of CONTAINERS:	Record the number of sampling containers (bottles, Whirl Pak, etc.) collected at the site.
PARAMETERS TO BE RUN:	On the diagonal lines, record the parameters that need to be analyzed. In the box below the parameter to be run, mark an "X" to signify if the sample needs to be run for that specific parameter.
REMARKS:	In the remarks section (on the right hand side of the page) record the WBID #, legal description and/or a verbal description of the site and any information you feel necessary to aid in the analysis or to clarify the custody procedure. A WBID# is required for all sites.
RELINQUISHED BY:	Each person that is in possession of samples must sign and date the manifest when custody is given to another person. The chain of possession should begin in the upper left signature box. See Section 1.2.1 for the definition of possession.
REMARKS:	In the lower right of the page is a "Remarks" section. Record any other information that may be pertinent to the collection.

Data Management & Records Management

The person who ultimately delivers the samples to the laboratory for processing should remove the bottom copy (pink colored page) and return it to the OCCWQ office. The copies should be returned to the Data Manager or to a designated location for processing. The next person in possession should keep the yellow copy—if applicable. The white copy should be returned with the analyzed, hardcopy data. Please note, the only exception to this possession sequence is with the DEQ Laboratory—in this case the "white copy" should be taken not the "pink copy".

All Chain of Custody forms are numbered in the lower right corner; thus all forms must be accounted for. DO NOT DESTROY ANY FORMS. If a COC form needs to be voided for any reason, write "VOID" through the pages, date and initial and return to the Data Manager for processing.

4.1 APPENDIX B

CHAIN OF CUSTODY AND SAMPLE LABELING

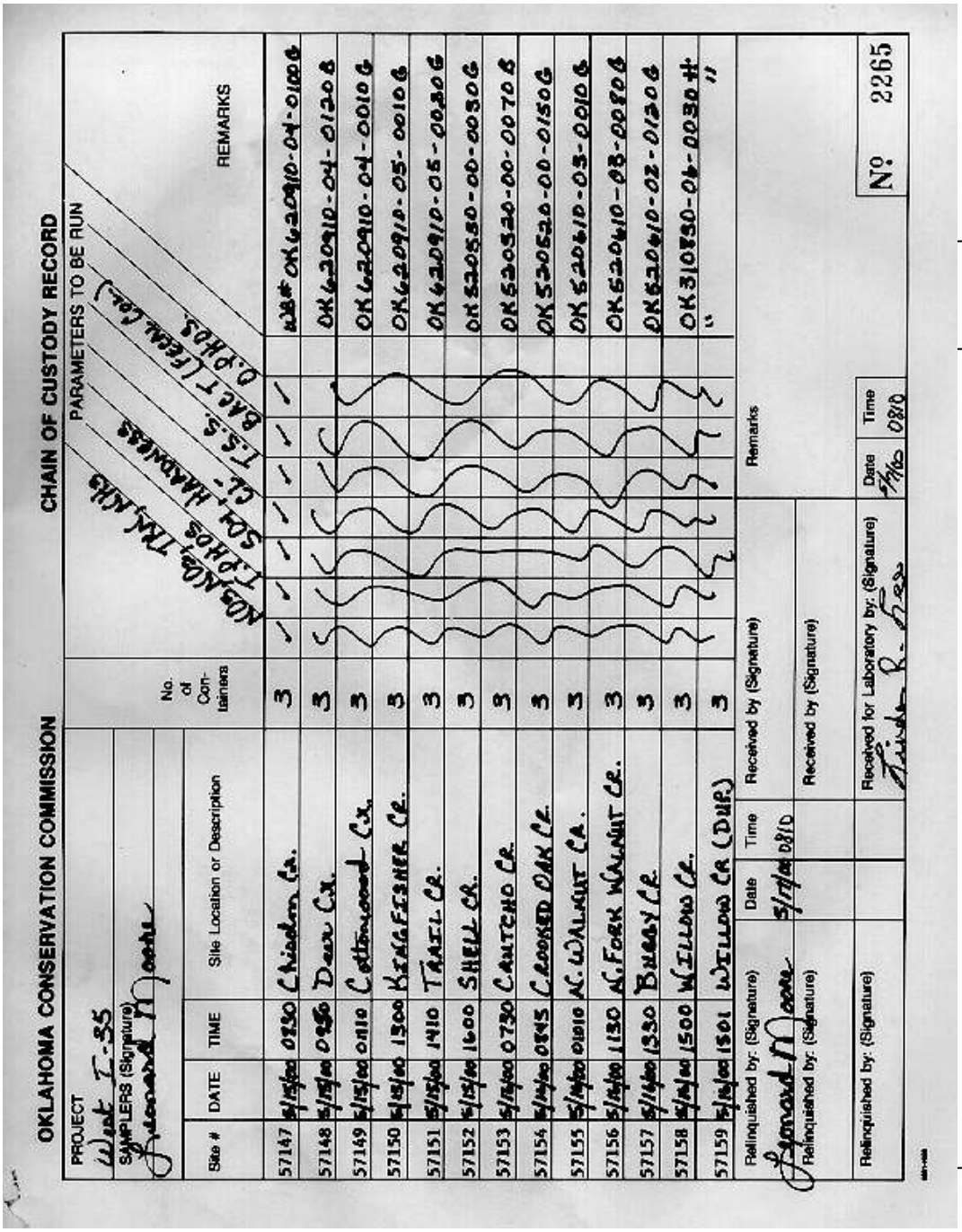

OKLAHOMA CONSERVATION COMMISSION — CHAIN OF CUSTODY RECORD

PROJECT: West I-35
SAMPLERS (Signature): Leonard Moore

PARAMETERS TO BE RUN: NO3/NO2, TKN, NH3, T.PHOS, SO4, HARDNESS, CL-, T.S.S., BAC.T (FECAL Coli), O.PHOS

Site #	DATE	TIME	Site Location or Description	No. of Con-tainers	NO3/NO2	TKN	NH3	T.PHOS	SO4	HARDNESS	CL-	T.S.S.	BAC.T (FECAL Coli)	O.PHOS	REMARKS
57147	5/15/00	0930	Chisolm Cr.	3	✓	✓	✓	✓							WBID# OK620910-04-0100G
57148	5/15/00	0956	Deer Cr.	3	✓	✓	✓	✓							OK620910-04-0120G
57149	5/15/00	0110	Cottonwood Cr.	3	✓	✓	✓	✓							OK620910-04-0010G
57150	5/15/00	1300	Kickapoo Cr.	3	✓	✓	✓	✓							OK620910-05-0010G
57151	5/15/00	1410	Trail Cr.	3	✓	✓	✓	✓							OK620910-05-0020G
57152	5/15/00	1600	Shell Cr.	3	✓	✓	✓	✓							OK530530-00-0030G
57153	5/16/00	0730	Cauteau Cr.	3	✓	✓	✓	✓							OK530530-00-0070G
57154	5/16/00	0845	Crooked Oak Cr.	3	✓	✓	✓	✓							OK530520-00-0150G
57155	5/16/00	0910	N. Walnut Cr.	3	✓	✓	✓	✓							OK520610-03-0010G
57156	5/16/00	1130	N. Fork Walnut Cr.	3	✓	✓	✓	✓							OK520610-03-0080G
57157	5/16/00	1330	Bubby Cr.	3	✓	✓	✓	✓							OK520610-02-0120G
57158	5/16/00	1500	Willow Cr.	3	✓	✓	✓	✓							OK310730-06-0030H
57159	5/16/00	1501	Willow Cr (DUP)	3	✓	✓	✓	✓							"

Relinquished by: (Signature) Leonard Moore — Date 5/17/00 — Time 0810 — Received by (Signature)
Relinquished by: (Signature) — Received by (Signature)
Relinquished by: (Signature) — Received for Laboratory by: (Signature) — Date 5/16/00 — Time 0810 — Remarks

No. 2265

WBID # (or legal)

Other pertinent information

Laboratory Number (assigned by the lab)

Sample Chain of Custody form. The column headings are self-evident for the most part. The "Site Number" refers to a laboratory tracking or lab log number. The "Comments" column is the location designated for the WBID #. Any other pertinent information can be recorded in the "Remarks" section on the lower right portion of the form.

OKLAHOMA CONSERVATION COMMISSION
WATER QUALITY DIVISION

STANDARD OPERATING PROCEDURE

SPECIFIC CONDUCTANCE MEASUREMENT

(YSI ProPlus Multimeter)

1.0 PROCEDURAL SECTION

1.1 Scope and Application[6]

Conductivity is a numerical expression of the ability of an aqueous solution to carry an electrical current. This ability depends on the presence of ions, their total concentration, mobility, valence, and relative concentrations, and on the temperature of measurement. Solutions of most inorganic acids, bases, and salts are relatively good conductors while organic compounds that do not dissociate are poor conductors. A measure of the ability of water to conduct an electrical current as measured using a 1-cm cell and expressed in units of electrical conductance, i.e., siemens (µS or µmho) at 25C. Specific conductance is related to the type and concentration of ions in solution and can be used for approximating the total dissolved solids (TDS) content of water by testing its capacity to carry an electrical current. For comparison, the specific conductance of seawater is approximately 50,000 µS, which is equivalent to a TDS concentration of about 35,000 milligrams per liter (mg/l).

Physical measurement of conductivity is measured in terms of resistance. Customarily conductivity is reported as micromhos per centimeter (µmhos/cm). The International System of Units (SI) unit is siemens (S) and is reported as microsiemens per centimeter (µS/cm).

1.2 Summary of Method

Conductivity can be measured in a conductivity cell connected to a Wheatstone bridge circuit, which allows measurement of the electrical resistance provided by the cell. For more information see Standard Methods (APHA, AWWA, WPCF, 1995). The field meters provide a reading that is equivalent to the commonly accepted method (Wheatstone bridge circuit) corrected to 25° C.

1.2.1 Definitions

- Conductivity — A measurement of the conductive material in the liquid sample without regard to temperature.
- Specific Conductance — Temperature compensated conductivity which automatically adjusts the reading to a calculated value which would have been read if the sample had been at 25°C
- Siemens (S) — The reciprocal of ohm in the International System of Units (SI)
- Mhos — The reciprocal of ohm in U.S. Customary units

1.3 Health and Safety Warnings

None

1.4 Cautions

Check the temperature sensor to make sure it is reading accurately. A 1° C difference could result in upwards of a 3% change in conductivity.

1.5 Interference

- Organic compounds (e.g. petroleum products) are poor conductors; avoid contacting oil films with the conductivity probe.
- Submerge probe below vent hole. Pay particular attention to the orientation of the vent hole to ensure that it is not facing down or covered with sediment. Water should flow through the vent. The electrode chamber should be free of trapped air.
- Ideally the cell should be at least ¼ inch away from any other object
- Electronic fields and stray currents caused by stirrer motors, heaters, etc. can interfere with measurements.

1.6 Personnel Qualification

Field personal must be trained and evaluated on the use of equipment prior to collecting samples or data. Use of the equipment is subject to approval by the QA Officer and/or Monitoring Coordinator. Training will be done through dry run exercises in the laboratory and field to familiarize field personnel with operation/collection, calibration, and maintenance. Investigators must be familiar with the SOP document and owner's manual, when applicable.

[6] Text was taken directly or in part from Standard Methods (APHA, AWWA, WPCF, 1995) and Sawyer *et al*. (1994).

1.7 Apparatus & Materials

- The YSI ProPlus Multimeter

1.8 Instrument/Method Calibration

These meters should be checked against conductivity standards each quarter following procedures specified by the QA officer. Consult the QA Officer for instructions on solving problems identified during QA/QC.

Conductivity calibration should be checked daily prior to commencing sampling activities, but should rarely require calibration. The conductivity standard, sensor-measured conductivity and difference should be recorded. If the sensor is reading outside the greater of 10 uS/cm or 1% from the standard solution then calibration is necessary. Calibration should always be completed using specific conductance. Following calibration the sensor reading and the cell constant should be recorded. If the cell constant falls outside 4 to 6 then reconditioning is necessary. Results of the calibration check should be recorded on the appropriate field data sheet.

1.9 Equipment Operation & Preparation

YSI ProPlus Multimeter

1. The ProPlus is powered by 2 C alkaline batteries. Before going to the field, switch meter **ON** using POWER key and check for battery charge level. If the display reads **low level**, the batteries must be replaced.
2. When the conductivity/temperature sensor is installed, specific conductance is selected as the parameter to be measured. Thus, the measurement is accurately temperature compensated.

1.10 Sample Collection

1. Rinse the electrode with deionized water to remove impurities. Shake or air-dry.
2. Place probe in water to be measured. The probe must be completely immersed past the temperature sensor. If sampling a stream, ensure that the probe is placed in flowing water (non-stagnant). Bubbles can become trapped inside of internal gap, which will result in erroneous values. To avoid this situation, shake probe after immersion to dislodge air bubbles.
3. Wait until the temperature reading has stabilized (very important).
4. Record the measurement for specific conductance on the "Sampling Site" sheet. **The data value should be recorded in µS** (1 mS = 1000 µS).
5. Rinse the electrode between samples and after the last measurement with D.I. water.

1.11 Sample Handling & Preservation

Measurement should be performed *in situ.* However, if measurement is performed in the laboratory, collect samples in clean glass or HDPE plastic containers with zero headspace. Place samples on ice.

1.12 Sample Preparation and Analysis

Samples should be analyzed within 28 days of collection.

1.13 Troubleshooting

See owner's manuals for the appropriate meter.

1.14 Data Acquisition, Calculation & Data Reduction

Not applicable

1.15 Computer Hardware & Software

Not applicable

1.16 Data Management & Records Management

1.16.1 Field Notation

All field calibration and calibration checks should be recorded on the **Sampling Episode Sheet** (see SOP Appendix: Data Sheets). All measurements made at each site should be recorded on the **Site Collection Sheet** (see SOP Appendix: Data Sheets). Data should be recorded following procedures outlined in the **Procedure for Completing Field Data Sheets SOP**.

1.16.2 Chain of Custody Procedure

Conductivity should be measured in the field; therefore no laboratory Chain of Custody form is required. However, if the laboratory is going to measure conductivity, then follow the procedures described in the **Chain of Custody and Sample Labeling SOP**.

2.0 QA/QC SECTION

2.1 Training

Training of field personal will be done through dry run exercises in the laboratory and/or field to familiarize them with instrument operation, calibration and maintenance. Investigators must be familiar with the SOP documents and owner's manual.

2.2 Maintenance

- The YSI ProPlus is waterproof, but the unit should not be submerged.
- Clean outside of unit with a moist cloth.
- No special storage is required for just the conductivity sensor, but since multiple sensors are on one unit (including DO), the unit should be stored in the plastic chamber.
- The YSI ProPlus has specific cleaning instructions located on page 64 of the owner's manual.

.

2.3 QC Procedures

YSI ProPlus meters should be calibrated/checked against conductivity standards prior to every day of sampling activities as well as each quarter following procedures as directed by the QA officer at a QA and meter calibration session. Consult the QA Officer for instructions on solving problems identified during QA/QC.

The YSI ProPlus can be calibrated following procedures in the owner's manual. However, according to YSI—**"System calibration is rarely required because of the factory calibration"**. Again, consult the QA Officer before taking specific steps to correct problems identified during QA/QC.

The collection of QA samples should follow the procedure specified in the **Preparation of Spike, Duplicate, and Blank Samples for Routine QA SOP**.

3.0 REFERENCES

APHA, AWWA, and WPCF (1995) Standard Methods for the Examination of Water and Wastewater, 19th edition, eds. L.S. Clesceri, A.E. Greenberg, and R.R. Trussell, American Public Health Association, Washington, D.C.

Sawyer, C.N. P.L. McCarty and G.F. Parkin (1994) Chemistry for Environmental Engineering, 4th edition, McGraw-Hill, Inc, New York, New York.

4.0 APPENDIX A

STANDARD OPERATING PROCEDURE
Field Summary

Conductivity Measurement

Equipment Operation & Preparation

YSI ProPlus Multimeter

1. The ProPlus is powered by 2 C alkaline batteries. Before going to the field, switch meter on using the power key and check for battery strength. If the display reads **low level**, the batteries must be replaced.
2. When the conductivity/temperature sensor is installed, specific conductance is selected as the parameter to be measured. Thus, the measurement is accurately temperature compensated.

Sample Collection

1. Rinse the electrode with deionized water to remove impurities. Shake or air-dry.
2. Place probe in water to be measured. The probe must be completely immersed past the temperature sensor. If sampling a stream, ensure that the probe is placed in flowing water (non-stagnant). Bubbles can become trapped inside of internal gap, which will result in erroneous values. To avoid this situation, shake probe after immersion to dislodge air bubbles.
3. Wait until the temperature reading has stabilized (very important).
4. Record the measurement for specific conductance on the “Sampling Site” sheet.
5. Rinse the electrode between samples and after the last measurement with D.I. water.

OKLAHOMA CONSERVATION COMMISSION
WATER QUALITY DIVISION

STANDARD OPERATING PROCEDURE

DATA RECEIPT

1.0 PROCEDURAL SECTION

1.1 Scope and Application

In order to maintain data accountability, a set procedure is established for the receipt, logging, and review of field and laboratory data.

1.2 Procedure

1. Completed field data will be delivered to the OCC main office within one month of collection, by the sampler. Upon delivery the sampler will stamp the forms as "Received" with the current date and place them in a fireproof file cabinet for application of quality assurance protocols. It is preferred that monitoring staff directly deposit their field data forms in the file cabinet, but in situations where field staff finds it infeasible to visit the main office in a timely manner, data may be mailed to the OCC main office. In situations, where field data is mailed, it will be stamped and stored by a QA officer. Data should always be photocopied or scanned prior to mailing. The copy should be retained until completion and acceptance of any final reporting requirements for which the data are relevant. Water quality data will be placed in a folder labeled "Completed Stamped Field Forms (WQ)". Biological data including fish and invertebrate field forms will be placed in a folder labeled "Bio/Habitat Field Forms (Stamped)". New data will be placed at the back of these folders so that older data can be processed first.
2. Laboratory data will be placed in the inbox of a QA officer at the OCC main office. The QA officer will stamp the data as "Received" and place them in a folder labeled "Completed/Stamped Lab Sheets" in a fireproof file cabinet. New data will be placed at the back of the folder so older data can be processed first.
3. A QA officer will collate field data with associated laboratory data on a weekly basis. Collated data will be moved to a folder labeled "Collated field/forms". Collated data is then ready for Quality Assurance protocols.
4. A QA officer will perform the initial Quality Assurance data review, QA1. The QA1 process includes checking and verifying data for completeness, appropriateness, adequacy, and conformity to established operating procedures. If the data are deficient following QA1, they will be returned to the sampler for correction. Datasheets in need of correction will be placed in a folder in the fireproof cabinet labeled with the sampler's name, with all areas that need remediation flagged. Once the data have been corrected, the sampler will place the forms in a folder labeled "Corrected Collated Field/Lab Forms" in the fireproof cabinet, leaving the flags in place. The QA officer will inspect the datasheets in the "Corrected Collated Field/Lab Forms" folder to ensure that all flags have been addressed. Once, the data are acceptable, the QA officer will place the forms in a binder for further quality assurance procedures.
5. Once QA1 is complete, the data are given to the Data Manager for processing. The Data Manager organizes the data in a useful manner and assigns a sample tracking number or “SAMPLEID” to each collection. The Data Manager enters lab and taxonomy results into the WQ digital database.
6. The Data Manager or a Data Entry Technician then enters the remaining field data sheets into the WQ database and performs a review of the lab and taxonomy results for errors. This completes the internal Quality Assurance review known as QA2.
7. The Data Manager performs additional Quality Assurance in the form of spot checks on the data that was entered by the Data Technician, which is QA3.
8. The Data Technician performs additional Quality Assurance in the form of spot checks on the data that was entered by the Data Manager, which is also QA3.
9. The Data Manager performs additional random reviews of the data and attempts to identify problems, and develop appropriate solutions to glaring inconsistencies and mistakes. The Data Manager obtains assistance from the Quality Assurance Officer and/or Assistant Director in addressing these issues.

1.3 Health and Safety Warnings

None

1.4 Cautions

None

1.5 Interference

Not applicable

1.6 Personnel Qualification

QA officers and Data Managers must be trained on field collection of data in order to identify any errors in completeness, appropriateness and adequacy. Training will be done through dry run exercises in the laboratory and field to familiarize QA personnel with operation/collection, calibration, and maintenance procedures. QA personnel must be familiar with the SOP document.

1.7 Apparatus & Materials
Not applicable

1.8 Instrument/Method Calibration
Not applicable

1.9 Equipment Operation & Preparation
Not applicable

1.10 Sample Collection
Not applicable

1.11 Sample Handling & Preservation
Not applicable

1.12 Sample Preparation and Analysis
Not applicable

1.13 Troubleshooting
Not applicable

1.14 Data Acquisition, Calculation & Data Reduction
Not applicable

1.15 Computer Hardware & Software
Data will be entered into the WQ database that is housed in a Microsoft Access database or AWQMS.

1.16 Data Management & Records Management
Data will be managed and handled following the procedure outlined in Section 1.2 above.

2.0 QA/QC SECTION

2.1 Training

QA officers and Data Managers must be trained on field collection of data in order to identify any errors in completeness, appropriateness and adequacy. Training will be done through dry run exercises in the laboratory and field to familiarize QA personnel with operation/collection, calibration, and maintenance procedures. QA personnel must be familiar with the SOP document.

2.2 Maintenance

Not applicable

3.0 REFERENCES

APHA, AWWA, and WPCF (1995) Standard Methods for the Examination of Water and Wastewater, 19th edition, eds. L.S. Clesceri, A.E. Greenberg, and R.R. Trussell, American Public Health Association, Washington, D.C.

Sawyer, C.N. P.L. McCarty and G.F. Parkin (1994) Chemistry for Environmental Engineering, 4th edition, McGraw-Hill, Inc, New York, New York.

OKLAHOMA CONSERVATION COMMISSION
WATER QUALITY DIVISION

STANDARD OPERATING PROCEDURE

DECONTAMINATION FOR AQUATIC NUISANCE SPECIES (ANS)

1.0 PROCEDURAL SECTION

1.1 Scope and Application

The establishment and spread of aquatic nuisance species in Oklahoma, such as zebra mussels, golden algae, and Didymo, is a concern requiring the attention of all field oriented facets of water quality management in the state. Aquatic nuisance species have the potential to outcompete native aquatic species, posing a threat to the overall balance of aquatic ecosystems, as well as having an economic impact on the state of Oklahoma and, in some cases, presenting a public health risk. Proactive measures are necessary to prevent establishment and/or further spread of these nuisance species.

1.2 Summary of Method

The goal of the Oklahoma Aquatic Nuisance Species (ANS) Management Plan initiated by the Oklahoma Department of Wildlife Conservation is to "minimize the harmful ecological, economic, and social impact of ANS through prevention and management of introduction, population growth, and dispersal of ANS into, within, and from Oklahoma." The Oklahoma Conservation Commission is an active partner in achieving this goal and as such will follow the guidelines in this document to reduce the likelihood of spreading ANS to uninfected waters.

Decontamination procedures will be implemented at the completion of sampling at each site where ANS are found.

The decontamination protocol is as follows:

- To the extent practicable sample sites visited in a day should be clustered within a watershed, and visits should be planned to begin sampling at the top of the watershed and move sequentially to the bottom of the watershed. In this way movement of materials upstream and between sites with no direct hydrologic linkage can be minimized.
- Upon leaving the sample site, all field equipment, must be visually inspected. Thoroughly examine treads of boots/waders and other spots which may trap ANS inconspicuously. Any ANS observed on equipment must be removed and killed.
- If equipment will not be used for at least 48 hours, air-drying will be sufficient for decontamination, provided that all equipment is spread out so that maximum airflow is allowed across all surfaces.
- When moving between watersheds, all waders and wading boots must be cleaned by spraying with a disinfectant solution, specifically 10% bleach. Remove wading gear, including separating removable wading boots from wading socks and insoles. Remove all gear from disinfectant and re-inspect for attached organisms, making sure to examine all folds in nets and waders and the laces and felt soles of boots. Then, rinse all gear with clean rinse water.
- If possible, air-dry all equipment prior to reuse.
- Hard surfaces on boat, buckets, waders, and any other equipment should be scrubbed with a brush to dislodge any veligers or algal cells.
- Replace disinfectant solution about every 3 days. Replace rinse water every day. **Do not dispose of bleach solution or rinse water in the field.** Always dispose of liquid down a drain that is routed to a wastewater treatment ODWC plant.

1.3 Health and Safety Warnings

Use care when spraying disinfectant solution. Protect eyes; thoroughly wash eyes if contact with solution occurs. Do not dispose of bleach solution or rinse water in the field. Always dispose of liquid down a drain that is routed to a wastewater treatment plant.

1.4 Cautions

Thorough examination and cleaning of all equipment must be performed to prevent the spread of ANS. Allow time for equipment to be decontaminated before sampling again. If possible, air-dry equipment between sampling sites.

1.5 Interference

None.

1.6 Personnel Qualification

Field personnel must be trained and evaluated on ANS identification and decontamination techniques. Decontamination techniques are subject to approval by the QA Officer and/or the Monitoring Coordinator. Training will be done through supervised exercises in the field to familiarize field personnel with procedures and techniques.

1.7 Apparatus & Materials

- 10% bleach solution, enough for spraying and/or soaking equipment
- 2 large buckets, one for holding disinfectant solution and one for holding rinse water (tap)

- Scrub brush
- Garden sprayer

1.8 Instrument/Method Calibration
Not applicable.

1.9 Equipment Operation & Preparation
Not applicable.

1.10 Sample Collection
Not applicable.

1.11 Sample Handling & Preservation
Not Applicable.

1.12 Sample Preparation and Analysis
Not Applicable.

1.13 Troubleshooting
Consult an experienced staff member or professional.

1.14 Data Acquisition, Calculation & Data Reduction
Not applicable.

1.15 Computer Hardware & Software
Not applicable.

1.16 Data Management & Records Management
If any ANS are observed, record the species observed and number of each species. Report any observed ANS to the senior technical writer for reporting to the ODWC for tracking of ANS distributions in the state.

2.0 QA/QC SECTION

2.1 Training
All field staff are required to become familiar with the SOP documents and proper procedures. Field staff will be required to participate in trainings conducted by the ODWC in fulfillment of ANS program goals. Annual field audits are performed on sample collectors to ensure proper use of decontamination procedures.

2.2 Maintenance
Not applicable.

2.3 QC Procedures
The field personnel are evaluated on an annual basis to critique sampling and decontamination techniques.

4.0 APPENDIX A

STANDARD OPERATING PROCEDURE
Field Summary

Health and Safety Warnings
Use care with disinfectant solution, especially to avoid eye contact. Do not dispose of bleach solution or rinse water in the field. Always dispose of liquid down a drain that is routed to a wastewater treatment plant.

Cautions
Thorough examination and cleaning of all equipment must be performed to prevent the spread of ANS. Allow time for equipment to be decontaminated before sampling again. If possible, air-dry equipment between sampling sites.

Interference
None.

Personnel Qualification
Field personal must be trained and evaluated on decontamination techniques. Training will be done through dry run exercises in the field to familiarize field personnel with procedures and techniques.

Apparatus & Materials
- 10% bleach solution, enough for spraying and/or soaking equipment
- 2 large buckets, one for holding disinfectant solution and one for holding rinse water (tap)
- Scrub brush
- Garden sprayer

Decontamination Method
- To the extent practicable sample sites visited in a day should be clustered within a watershed, and visits should be planned to begin sampling at the top of the watershed and move sequentially to the bottom of the watershed. In this way movement of materials upstream and between sites with no direct hydrologic linkage can be minimized.
- Upon leaving the sample site, all field equipment, must be visually inspected. Thoroughly examine treads of boots/waders and other spots which may trap ANS inconspicuously. Any ANS observed on equipment must be removed and killed.
- <u>If equipment will not be used for at least 48 hours</u>, air-drying will be sufficient for decontamination, provided that all equipment is spread out so that maximum airflow is allowed across all surfaces.
- <u>When moving between watersheds, all waders</u> and wading boots must be cleaned by spraying with a disinfectant solution, specifically 10% bleach. Remove wading gear, including separating removable wading boots from wading socks and insoles. Remove all gear from disinfectant and re-inspect for attached organisms, making sure to examine all folds in nets and waders and the laces and felt soles of boots. Then, rinse all gear with clean rinse water.
- If possible, air-dry all equipment prior to reuse.
- Hard surfaces on boat, buckets, waders, and any other equipment should be scrubbed with a brush to dislodge any veligers or algal cells.
- Replace disinfectant solution about every 3 days. Replace rinse water every day. **Do not dispose of bleach solution or rinse water in the field.** Always dispose of liquid down a drain that is routed to a wastewater treatment ODWC plant.

Data Management & Records Management
If any ANS are observed, record the species observed and number of each species. Report any observed ANS to the senior technical writer, who will report it to the ODWC for tracking of ANS distribution in the state.

OKLAHOMA CONSERVATION COMMISSION
WATER QUALITY DIVISION

STANDARD OPERATING PROCEDURE

DEPTH INTEGRATED SAMPLER

(US-DH76)

1.0 PROCEDURAL SECTION

1.1 Scope and Application

The theory behind using a depth-integrated sampler instead of collecting a grab sample is that the quality of water moving down a channel during a high flow event is not homogeneous. There is often a moving blanket of more concentrated suspended solids near the bottom, and it is important that this water be sampled. Another factor, which may be as important, is the horizontal distribution of water quality. Because of depth differences, eddies, and other currents, water quality is often not horizontally homogeneous.

1.2 Summary of Method

The general idea behind the use of a depth integrated sampler is that it allows water from the stream to pass slowly into the collecting bottle as you lower it down to the bottom of the stream and as you raise it back to the surface. If you lower and raise it at a constant speed, it will have collected equal amounts of water from any given depth. By following this procedure, you will get a water sample that accurately represents the average water quality of the water column where the sampler was lowered, thus correcting for any differences in water quality from top to bottom of the stream. To correct for differences in water quality from side to side in the stream, you must take several vertical samples along a bridge. These samples should be taken so that all of the water is represented in equal proportions to its flow in the stream. This means that the sample stations should be evenly spaced along the bridge and the sampler must be lowered and raised at the same speed at each station. If this is done the sample taken from the deepest part of the river will have the largest volume and samples taken from more shallow sections will be proportionately smaller.

1.3 Health and Safety Warnings

Watch for large floating debris (e.g. trees/limbs) that could snag the sampler and pull it out of your hands resulting in rope burns or worse. DO NOT ATTACH THE SAMPLER TO YOUR PERSON.

1.4 Cautions

It's important that the bottle still be partially empty when you bring it to the surface. This lets you know that the bottle didn't fill up somewhere underwater and prevent water from the whole water column from being sampled evenly.

1.5 Interferences

None

1.6 Personnel Qualification

Field personal must be trained and evaluated on use of equipment prior to collecting samples or data. Use of the equipment is subject to approval by the QA Officer and/or the Environmental Monitoring Coordinator. Training will be done through dry run exercises in the laboratory and field to familiarize field personnel with operation/collection, calibration and maintenance. Investigators must be familiar with the SOP documents and owner’s manual, when applicable.

1.7 Apparatus & Materials

Depth integrated sampler US-DH76

1.8 Instrument/Method Calibration

None

1.9 Equipment Operation & Preparation

Before a runoff event occurs wash and clean all sampling equipment being careful that no residue of sediment or detergent remains on the sampler insert bottles, the rubber gasket, or the intake nozzles. Also check the rubber gasket for cracks and defects.

In the field, mark the stations where you will take vertical profiles on the side of the bridge according to the following guidelines.
For streams <10 meters wide place 3 to 5 marks on the bridge that will divide the stream into 4 to 6 equal sections.
For streams >10 meters wide place 6 to 10 marks on the side of the bridge.

1.10 Sample Collection

1. Place the glass bottle insert into the sampler. Make sure the lip of the bottle seats evenly on the rubber gasket.

2. Select the appropriate nozzle size depending on the flow of the stream. If the stream stage is up and the velocity is high then a smaller nozzle size should be selected and vice versa.
3. Screw the nozzle into the hole at the front end of sampler.
4. Attach and secure the sampler-hanging bracket at the top of sampler.
5. Rig up and secure the suspension line or cable to the sampler hanging bracket and suspend the sampler over the side of the bridge.
6. At the deepest cross section site, lower the sampler to the surface of the water just to where the fin on the sampler barely touches the water. Do not submerge the sampler until it has aligned itself with the nozzle pointing upstream.
7. Look out for logs and brush floating downstream. If something large is about to snag the sampler, you need to raise it out of the way and start over.
8. Once aligned with the current, lower the sampler at a uniform rate of speed until it touches the bottom of the stream and then raise the sampler at a uniform rate of speed to the surface.
9. Observe the sampler bottle after taking it out of the sampler. In order to avoid overfilling, make sure the sampler bottle is not more than ¾ full.
10. If the bottle is overfilled, discard the sample and start over using a smaller nozzle opening and/or lowering and raising the sampler at a faster rate of speed.
11. Once a proper sample is collected pour it into a splitter churn or larger bottle.
12. Repeat the process at all of the other cross section sites along the bridge. Be very careful to raise and lower the sampler at the same speed at all sites. Pour each of the collected samples into the same splitter churn or large bottle.
13. After all of the samples have been collected, use the splitter churn to portion out the sample into all of the bottles necessary for the lab analysis.
14. If more sample volume is required, it will be obtained after sampling all of the stations on the bridge. Lower the sampler from each station twice instead of once. This will double the volume.

1.11 Sample Handling & Preservation

Depending on the parameters to be collected (nutrients, metals, pesticides, inorganics, etc.), preserve and handle the sample according to the appropriate SOP. Refer to the instructions in the SOP manual.

1.12 Sample Preparation and Analysis

For most parameters, the analytical laboratory will be responsible for sample preparation and analysis.

1.13 Troubleshooting

None

1.14 Data Acquisition, Calculation & Data Reduction

None

1.15 Computer Hardware & Software

None

1.16 Data Management & Records Management

1.16.1 Field Notation

Data should be recorded following procedures outlined in the SOP manual. A detailed description of the sampling locations should be recorded on the **Site Collection Sheet** (see SOP Appendix: Data Sheets) and in the **Field Notebook** along with a description of the sample composite method used.

1.16.2 Chain of Custody Procedure

The handling of Chain of Custody forms should follow the procedures described in the **Chain of Custody and Sample Labeling SOP**.

2.0 QA/QC SECTION

2.1 Training

Training of field personnel will be done through hands-on exercises in the field to familiarize them with instrument operation, calibration, and maintenance. Investigators must be familiar with the SOP document and owner's manual, when applicable.

2.2 Maintenance

- Sampling bottles should be cleaned thoroughly after use and stored to prevent contamination
- Sampling line should be rinsed and dried prior to storage

2.3 QC Procedures

None

4.0 APPENDIX A

STANDARD OPERATING PROCEDURE
Field Summary

DEPTH INTEGRATED SAMPLER

Sample Preparation
Before a runoff event occurs, wash and clean all sampling equipment, being careful that no residue of sediment or detergent remains on the sampler insert bottles, the rubber gasket, or the intake nozzles. Also, check the rubber gasket for cracks and defects.

In the field, before a runoff event occurs, permanently mark the stations where you will take vertical profiles on the side of the bridge according to the following guidelines.
For streams <10 meters wide place 3 to 5 marks on the bridge that will divide the stream into 4 to 6 equal sections.
For streams >10 meters wide place 6 to 10 marks on the side of the bridge.

Sample Collection
1. Place the glass bottle insert into the sampler. Make sure the lip of the bottle seats evenly on the rubber gasket.
2. Select the appropriate nozzle size depending on the flow of the stream. If the stream stage is up and the velocity is high, then a smaller nozzle size should be selected and vice versa.
3. Screw the nozzle into the hole at the front end of sampler.
4. Attach and secure the sampler-hanging bracket at the top of sampler.
5. Rig up and secure the suspension line or cable to the sampler hanging bracket and suspend the sampler over the side of the bridge.
6. At the deepest sampling station, lower the sampler to the surface of the water just to where the fin on the sampler barely touches the water. Do not submerge the sampler until it has aligned itself with the nozzle pointing upstream.
7. Look out for logs and brush floating downstream. If something large is about to snag the sampler, you need to raise it out of the way and start over.
8. Once aligned with the current, lower the sampler at a uniform rate of speed until it touches the bottom of the stream and then raise the sampler at a uniform rate of speed to the surface.
9. Observe the sampler bottle after taking it out of the sampler. In order to avoid overfilling, make sure the sampler bottle is not more than ¾ full.
10. If the bottle is overfilled, discard the sample and start over using a smaller nozzle opening and/or lowering and raising the sampler at a faster rate of speed.
11. Once a proper sample is collected, pour it into a splitter churn or larger bottle.
12. Repeat the process at all of the other sampling stations along the bridge—all samples must be collected at the same speed. Pour all samples into the same splitter churn or large bottle.
13. After all of the samples have been collected, use the splitter churn to portion out the sample into all of the bottles necessary for the lab analysis.
14. If more sample volume is required then will be obtained after sampling all of the stations on the bridge, lower the sampler from each station twice instead of once. This will double the volume.

OKLAHOMA CONSERVATION COMMISSION
WATER QUALITY DIVISION

STANDARD OPERATING PROCEDURE

DISSOLVED OXYGEN MEASUREMENT

(YSI ProPlus Multimeter)

1.0 PROCEDURAL SECTION

1.1 Scope and Application

The measure of dissolved oxygen (DO) is an expression of the soluble oxygen concentration in terms of mass per unit volume (e.g. mg/L). In theory, at any given temperature, altitude, P_{O2}, and ionic strength the concentration of oxygen can be calculated based on Henry's law. However, in the aquatic environment, the DO concentration is influenced by physical, chemical, and biological factors. Subsequently, the measurement of DO should be conducted under field conditions.

1.2 Summary of Method[1]

The DO probe is composed of two solid metal electrodes, an electrolyte solution (KCl) and oxygen selective membrane (Teflon). The electrodes are immersed in the electrolyte solution and separated from the test solution by the membrane. The membrane allows oxygen and some other gases to pass across the membrane, which reacts with the anode resulting in an electrical current. Oxygen passes across the membrane at a rate proportional to the pressure difference. Oxygen is consumed at the cathode, thus the oxygen pressure inside the membrane is zero. The rate of oxygen transfer across the membrane is proportional to the absolute pressure outside the membrane (more oxygen, more pressure, more current, higher DO reading). In summary, the diffusion current is measured, which is linearly proportional to concentration of dissolved oxygen (Csuros, 1994).

1.2.1 Definitions

None

1.3 Health and Safety Warnings

None

1.4 Cautions

- Dissolved oxygen is particularly dependent on temperature (varies 4-6%/each degree C); therefore, make sure the temperature reading is accurate.
- Dissolved oxygen is dependent on altitude. A change of 1000 ft. can result in a 3% reading error; therefore, identify the altitude of the sampling location.

1.5 Interference

- Any coating (oily or slimy fluids) of the membrane will affect reading. Aerobic and anaerobic slimes are important because they may consume or produce oxygen, which influences the electrode sensor.
- The following gases are known to interfere with oxygen measurement; hydrogen sulfide, sulfur dioxide, the halogens (H_2, Cl_2, F_2…), neon, nitrous acid (YSI information).

1.6 Personnel Qualification

Field personnel must be trained and evaluated on use of equipment prior to collecting samples or data. Use of the equipment is subject to approval by the QA Officer and/or Monitoring Coordinator. Training will be done through dry run exercises in the laboratory and field to familiarize field personnel with operation/collection, calibration and maintenance. Investigators must be familiar with the SOP document and owner's manual, when applicable.

1.7 Apparatus & Materials

- YSI ProPlus Multimeter

1.8 Instrument/Method Calibration

Calibration of the meter should occur prior to initial sample collection according to manufacturer recommendations (YSI 2010). Some probes require warm-up time prior to calibration; ensure manufacturer guidelines are followed. Galvanic DO sensors do not require "warm-up" time. The instrument is ready to measure when it is powered on and, therefore, users are not required to wait to calibrate or to take readings. If following calibration, the DO value deviates by more than 5% of theoretical or the sensor current falls outside acceptable range (4.31 to 8 uA), re-calibration should be conducted. Results of the calibration check should be recorded on the appropriate field data sheet.

Calibration of the meter requires the altitude of the region in which samples are taken, along with the salinity of the water. There are three basic techniques for calibration—Winkler titration, air-saturated water, and water-saturated air. The water-saturated air method is recommended by YSI.

Probe Preparation:

For all meter models the preparation of the probe is similar.

1. Check the integrity of the membrane. Look for air bubbles, wrinkles, or desiccated membrane. Change membrane and fluid if needed; refer to owner's manual.
2. Membrane life depends on usage. The average replacement interval is two to four weeks.
3. Place probe in air saturated with water.

YSI ProPlus

1. Ensure that the probe is in the calibration cup with a small amount of water and several of the threads of the cup engaged. The goal is to have air exchange between inside and outside of the calibration cup
2. Turn the meter on by pressing the power button.
3. Make sure there are no water droplets on the DO membrane or temperature sensor.
4. Press the CAL button. Highlight the DO probe, press enter. Highlight DO % and press enter.
5. The instrument will use the internal barometer during calibration and will display this value in brackets at the top of the display. Highlight barometer and adjust it if needed.
6. Wait for the temperature and the DO% values under "actual readings" to stabilize. Then highlight Accept Calibration and press enter to calibrate.
7. Open the GLP file and record the sensor current. The sensor current should fall between 4.31 and 8 uA. If the sensor current falls outside this range sensor reconditioning may be necessary.

1.9 Sample Collection:

YSI ProPlus

1. Dissolved Oxygen should be measured from mid-channel, at about 1 foot depth, from an area of running water. Raising and lowering the probe about 1 ft per second can provide manual stirring. Care should be taken to avoid any surface scum. The probe can be submerged completely. This model of meter has a non-detachable probe.
2. Allow sufficient time for the probe to stabilize with the sample temperature.
3. Allow a few minutes for the dissolved oxygen to stabilize.
4. Record the result on the appropriate field data sheet and/or field notebook.
5. Rinse electrode and replace in humidity chamber.
6. Leave meter on until the last site is sampled for the day. This will avoid the need for recalibration.

1.10 Sample Handling & Preservation

Measurement must be performed in the field.

1.11 Sample Preparation and Analysis

There is no holding time for DO; it should be measured immediately.

1.12 Troubleshooting

See owner's manuals for the appropriate meter

1.13 Data Acquisition, Calculation & Data Reduction

Not applicable

1.14 Computer Hardware & Software

Not applicable

1.15 Data Management & Records Management

1.15.1 Field Notation

All field calibration and calibration checks should be recorded on the **Sampling Episode Sheet** (see SOP Appendix: Data Sheets). All DO measurements made at each site should be recorded following the **Procedure for Completing Field Data Sheets SOP** on the **Site Collection Sheet** (See SOP Appendix: Data Sheets).

1.15.2 Chain of Custody Procedure

Dissolved oxygen should be measured in the field; therefore, no Chain of Custody form is required. However, if the laboratory is going to measure Dissolved Oxygen, then follow the procedures described in the **Chain of Custody and Sample Labeling SOP**.

2.0 QA/QC SECTION

2.1 Training

Training of field personnel will be done through dry run exercises in the laboratory to familiarize them with instrument operation, calibration, and maintenance. All operators are required to become familiar with the SOP document and owner's manual. Prior to solo sample collection, field personnel are evaluated in a field setting for proper use of equipment and sample collection protocol. Annual field audits are performed on sample collectors following procedures outlined in the Quality Management Plan.

2.2 Maintenance

- The unit is splash proof, but not waterproof, do not submerge.
- Clean outside of unit with a moist cloth.
- Store probe in humidity chamber to prevent membrane dehydration.
- Avoid touching membrane-- do not wipe clean.
- Membrane life depends on usage. The average replacement interval is 2 – 4 weeks.
- Refer to the appropriate owner's manual for cleaning and recharging electrode procedures.

2.3 QC Procedures

These meters should be checked and calibrated against Winkler titration each quarter following procedures as directed by the QA officer at a QA and meter calibration session.

The collection of QA samples should follow the procedure specified in the **Preparation of Spike, Duplicate, and Blank Samples for Routine QA SOP**. Results will be recorded in the field notebook.

3.0 REFERENCES

Csuros, M., (1994) Environmental Sampling and Analysis for Technicians, Lewis Publishers, Boca Raton.

YSI Owner's Manuals for Model: YSI ProPlus, Yellow Springs Instruments Co. Inc., Yellow Springs Ohio.

YSI (2010) YSI Professional Plus: Calibration Tips, Yellow Spring Instruments Co. Inc., Yellow Springs Ohio.

4.0 APPENDIX A

STANDARD OPERATING PROCEDURE
Field Summary

DO Measurement

Instrument/Method Calibration
Calibration of the meter should occur prior to initial sample collection according to manufacturer recommendations (YSI 2010). Some probes require warm-up time prior to calibration; ensure manufacturer guidelines are followed. Galvanic DO sensors do not require "warm-up" time. If following calibration, the DO value deviates by more than 5% of theoretical or the sensor current falls outside acceptable range (4.31 to 8 uA), re-calibration should be conducted. Results of the calibration check should be recorded on the appropriate field data sheet.

Calibration of the meter requires the altitude of the region in which samples are taken, along with the salinity of the water. There are three basic techniques for calibration—Winkler titration, air-saturated water, and water-saturated air. The water-saturated air method is recommended by YSI.

Probe Preparation:
For all meter models the preparation of the probe is similar.
1. Check the integrity of the membrane. Look for air bubbles, wrinkles, or desiccated membrane. Change membrane and fluid if needed; refer to owner's manual.
2. Membrane life depends on usage. The average replacement interval is <u>two to four weeks</u>.
3. Place probe in air saturated with water.

<u>YSI ProPlus</u>

1. Ensure that the probe is in the calibration cup with a small amount of water and several of the threads of the cup engaged. The goal is to have air exchange between inside and outside of the calibration cup
2. Turn the meter on by pressing the power button.
3. Make sure there are no water droplets on the DO membrane or temperature sensor.
4. Press the CAL button. Highlight the DO probe, press enter. Highlight DO % and press enter.
5. The instrument will use the internal barometer during calibration and will display this value in brackets at the top of the display. Highlight barometer and adjust it if needed.
6. Wait for the temperature and the DO% values under "actual readings" to stabilize. Then highlight Accept Calibration and press enter to calibrate.

Sample Collection:

<u>YSI ProPlus</u>

1. Dissolved oxygen readings should be measured from mid-channel, at about 1 foot depth, from an area of running water. Manual stirring can be provided by raising and lowering the probe about 1 ft. per second. Care should be taken to avoid any surface scum. The probe can be submerged completely. This model of meter has a non-detachable probe.
2. Allow sufficient time for the probe to stabilize with the sample temperature. If the probe was calibrated under ambient temperature conditions, this step is not required.
3. Allow a few minutes for the dissolved oxygen to stabilize.
4. Record the result on the appropriate field data sheet and/or field notebook.
5. Rinse electrode and replace in humidity chamber.
6. Leave meter on until the last site is sampled for the day. This will avoid the need for re-calibration.

Maintenance
- Unit is splash proof, but <u>not</u> waterproof, do not submerge unit.
- Clean outside of unit with a moist cloth.
- Store probe in humidity chamber to prevent membrane dehydration.
- Avoid touching membrane-- do <u>not</u> wipe clean.
- Membrane life depends on usage. The average replacement interval is 2 – 4 weeks.
- Refer to the appropriate owner's manual for cleaning and recharging electrode procedures.

Table I
Solubility of Oxygen in Fresh Water

TEMP °C	Mg/L DO	TEMP °C	Mg/L DO
0	14.60	23	8.56
1	14.19	24	8.40
2	13.81	25	8.24
3	13.44	26	8.09
4	13.09	27	7.95
5	12.75	28	7.81
6	12.43	29	7.67
7	12.12	30	7.54
8	11.83	31	7.41
9	11.55	32	7.28
10	11.27	33	7.16
11	11.01	34	7.05
12	10.76	35	6.93
13	10.52	36	6.82
14	10.29	37	6.71
15	10.07	38	6.61
16	9.85	39	6.51
17	9.65	40	6.41
18	9.45	41	6.31
19	9.26	42	6.22
20	9.07	43	6.13
21	8.90	44	6.04
22	8.72	45	5.95

Table I (above) and Table II (below) allow for the calculation of theoretical DO. Following calibration the DO should be within 5% of theoretical DO. Table I shows DO solubility at temperatures ranging from 0°C to 45°C. Table II shows the correction factor that should be used to correct the calibration value for the effects of atmospheric pressure or altitude. Select the relevant altitude and read across the table to identify the correction factor. Multiply the temperature-specific DO solubility by the altitude-specific correction factor to calculate theoretical. When calculating theoretical DO, round to the nearest °C, and round altitude to the nearest value in Table II.

Table II
Correction for Atmospheric Pressure (YSI)

Altitude (ft.)	Correction Factor	Altitude (ft.)	Correction Factor	Altitude (ft.)	Correction Factor	Altitude (ft.)	Correction Factor
0	1.00	1100	0.96	2300	0.92	3500	0.88
100	1.00	1200	0.96	2400	0.92	3600	0.88
200	0.99	1300	0.95	2500	0.91	3700	0.87
250	0.99	1400	0.95	2600	0.91	3800	0.87
300	0.99	1500	0.95	2700	0.91	3900	0.87
400	0.98	1600	0.94	2800	0.90	4000	0.86
500	0.98	1700	0.94	2900	0.90	4100	0.86
600	0.98	1800	0.94	3000	0.90	4200	0.86
700	0.97	1900	0.93	3100	0.89	4300	0.85
800	0.97	2000	0.93	3200	0.89	4400	0.85
900	0.97	2100	0.93	3300	0.89		
1000	0.96	2200	0.92	3400	0.88		

OKLAHOMA CONSERVATION COMMISSION
WATER QUALITY DIVISION

STANDARD OPERATING PROCEDURE

EQUIPMENT, SUPPLIES, AND TRACKING

1.0 PROCEDURAL SECTION

1.1 Scope and Application

In order to monitor water quality, all field personnel must have the necessary equipment, supplies and spare parts on hand as there will not often be time to obtain these materials when monitoring begins. It is the responsibility of each person working for OCC Water Quality to make sure he or she has the necessary equipment and supplies available.

1.2 Policy

This SOP covers the tracking of equipment, the general list of necessary supplies, and the procedure for ordering.

1.2.1 Equipment Tracking

As a state agency, OCC-WQ is required to keep accurate records on the equipment that is purchased. All equipment must be tracked and readily located for annual inventory. Equipment that is not in service, obsolete, or non-functioning cannot be disposed of or given away without prior authorization from the Comptroller.

All non-consumable items (i.e. items >$300) require a State/OCC identification tag and tracking number. This is a metallic label with a series of numbers that is used by the Comptroller for accounting purposes. Items <$300 do not need to have an OCC identification number assigned to them. If you are not sure if you need an OCC number, check with the Director of Monitoring.

All field and office personnel will have a list of equipment assigned to them. This includes meters, field equipment, office furniture, computers and other items. On the list will be a description of the item and the OCC tracking number.

If you receive new equipment or field meters, you must obtain a “WQ tracking number” from the Office Manager. This is a temporary number that is used by the Water Quality Office to track equipment before an OCC number is available. State/OCC number usually takes several weeks to months to arrive in the WQ Office.

1.2.2 Field Personnel Supplies

Water quality sampling requires a basic cache of supplies and spare parts. Located in Appendix A is a basic inventory list; however, it is not intended to be all encompassing. Each person is responsible for maintaining his or her supply inventory.

4.0 APPENDIX A

Inventory List
For Basic Water Quality Sampling

_____ D.O meter and probe (1)
_____ electrode filling solution (1 oz.)
_____ spare membranes (5)
_____ scissors (1) if meter uses non-precut membranes
_____ manual (1)

_____ pH meter and probe (1)
_____ electrode storage solution (at least 8 oz.)
_____ manual (1)
_____ spare probe (1)
_____ pH 4, 7, & 10 buffers (8 ounce each)

_____ Conductivity meter and probe (1)
_____ manual (1)

_____ Alkalinity and Hardness Test Kits (1)
_____ digital titrator (1)
_____ 125 or 250 ml Erlenmeyer flasks (3)
_____ bromcresol green-methyl red indicator (25)
_____ EDTA syringe 0.8M (3)
_____ EDTA syringe 0.08M (3)
_____ Hardness 1 buffer (25)
_____ ManVer 2 hardness indicator (25)
_____ acid syringe 0.1600N (3)
_____ acid syringe 1.60N (3)
_____ 100 ml graduated cylinder (2)
_____ brush for cylinder and flasks (1)
_____ manual (1)

_____ Flow meter and probe
_____ wading rod (1)
_____ field data sheets, waterproof (10)
_____ clipboard (1)
_____ pencil (2)
_____ carrying case (1)
_____ manual (1)

_____ Turbidity meter
_____ StablCal standards (3)
_____ measuring vials (2)
_____ manual (1)

_____ Spare batteries for all meters

_____ Screwdriver to open meter cases

_____ Sample bottles (25 or enough as required)

_____ Bacteria sample bottles (enough as required)

_____ Ice chest(s) (at least 1 ~ 50 qt. size)

_____ Sulfuric Acid for preservation (15 vials or as many as needed)

_____ Safety goggles (1)

_____ Churn splitter - 3-5 liter (1 if needed)

_____ Deionized water (1 gallon or more)

_____ Indelible marking pen (Sharpie®) (2)

_____ Towels, paper or cloth (several)

_____ Chest waders

_____ Camera

_____ 100 Meter long tape measure

_____ Safety equipment
- _____ Emergency beacon
- _____ Flashlight

_____ Decontamination kit
- _____ 10% bleach solution, enough for spraying and/or soaking equipment
- _____ 2 large buckets, one for holding disinfectant solution and one for holding rinse water (tap)
- _____ Scrub brush
- _____ Garden sprayer

OKLAHOMA CONSERVATION COMMISSION
WATER QUALITY DIVISION

STANDARD OPERATING PROCEDURE

PROCEDURE FOR COMPLETING FIELD DATA SHEETS

(SAMPLING EPISODE SHEETS & SITE COLLECTION SHEETS)

1.0 PROCEDURAL SECTION

1.1 Scope and Application

The purpose for field notation is three-fold. First, the collection of data and relevant supporting information is necessary for incorporation into the Water Quality Database Management System. Second, consistent data records reduce confusion and provide better consistency. Third, routine collection and strict documentation are essential for proper QA/QC procedures. The objective of this SOP is to describe the procedures for filling out the **Sampling Episode Sheet** and the **Site Collection Sheet**.

1.2 Summary of Method

Field observations and data will be recorded using a combination of formats including a **Sampling Episode Sheet** and a **Site Collection Sheet**. The **Sampling Episode Sheet** will be used to coordinate and track the collection of data at several sites during one sampling event. The **Site Collection Sheet** will be used to record all relevant information conducted at a specific location.

1.2.1 Definitions

Sampling Episode Sheet:	Single page field data sheet used to act as a title or coordinating page for several individual sampling events under one project or QA event.
Site Collection Sheet:	Single page field data sheet filled out at each sampling location. All activities and observations relevant to the particular site are recorded on this sheet.

1.3 Health and Safety Warnings

Not applicable

1.4 Cautions

Not applicable

1.5 Interferences

- Poor penmanship
- Runny ink
- Non-waterproof paper
- Incomplete documentation

1.6 Personnel Qualification

Field investigators must be trained and evaluated by the Quality Assurance Officer and/or the Monitoring Coordinator on the proper procedure for recording field information. Investigators must be familiar with the appropriate SOP documents, where applicable.

1.7 Apparatus & Materials

- Field data sheets—on water resistant paper
- Waterproof ink pen or pencil

1.8 Procedure

Because all of the information observed in the field is important and helpful in the analysis and evaluation of data, field data sheets need to be filled out in a format that is clear, concise, and consistent. Proper recording reduces the chance of transcription errors and provides additional information to the technical writer. For all field data sheets, **DO NOT LEAVE ANY SPACES BLANK.** Use a dash line or "x" to signify that the measurement was not applicable or not measured. This will distinguish between data not observed from information that was unintentionally omitted. Additionally, DO NOT use a dash line to reflect a zero result.

The procedures for the two field data sheets are discussed in this section.

1.8.1 Sampling Episode Sheet

The **Sampling Episode Sheet** acts as the coordinating page for an entire sampling event or for sampling conducted under one set of QA data samples. For instance, an individual project with six sampling locations visited on the same day would have one **Sampling Episode Sheet**. In contrast, a larger sampling project that has numerous data sites may require several days to sample or several teams of technicians. If this is the case, a **Sampling Episode Sheet** will be filled out for each day of sampling. The purpose for the **Sampling Episode Sheet** is to coordinate all the information

on a central page. From this page a sampling event can be tracked. In addition, important QA/QC information is recorded in one central location and can be easily located in the database.

A copy of the **Sampling Episode Sheet** form is found in the **SOP Appendix: Data Sheets**.

The following bullets will describe how the sheet should be completed.

DATA SHEET HEADER INFORMATION:

- TASK #/PROJECT: Record the OCC-WQ task number and project name.
- SITE DATE: Record the site date in MM/DD/YR format.
- SAMPLING CREW LEADER: Record the name of the person who is in charge of the site activities and will be responsible for data custody and reporting. Questions regarding the data will be directed to this person.
- SITES (NAME & WBID): Record the names of ALL sites that are visited during this sampling event. If there are five locations, all five site names and water body identification numbers (WBID #) should be recorded.

QA/QC INFORMATION:

- QA/QC SAMPLES COLLECTED: Circle Yes or No if QA/QC samples were collected. If Yes, the appropriate fields should be completed as further explained below (see FIELD QA/QC READINGS). Please note that if a sampling event is over a two-day period, the site information is to be completed on both **Sampling Episode Sheets**. However, the Field QA/QC Readings need to be completed on the **Sampling Episode Sheet** from the day the QA/QC was collected.
- SITE NAME: Record the name of the site selected for QA/QC.
- WBID #: Record the waterbody identification number of the site selected for QA/QC.
- SITE DATE: Record the site data in MM/DD/YY format, which is also recorded on the **Site Collection Sheet**.
- SITE TIME: Record the site time in military format, which is also recorded on the **Site Collection Sheet** The "site time" is when initial activities began at the site.

FIELD QA/QC READINGS: Field QA/QC values are recorded in this section to evaluate the field meters and the quality of the field collected data. There are three columns, BLANK, DUP/SPLIT, and REPLICATE. "XXXXXX" indicates that no result should be recorded for that parameter. Complete the meter readings on the **Sampling Episode Sheet** corresponding with the day the QA/QC was collected; otherwise, cross out the section on non-QA/QC days.

- BLANK: A blank is a sample of de-ionized water (analyte-free) used to evaluate the baseline reading of field meters/analyses. For OCC's purposes, blanks are only applicable for field meters/analyses requiring a reuse of sample vessels thus necessitating cleansing between sites to avoid cross contamination and bias of readings. Therefore, a blank should be evaluated for the turbidity, alkalinity, and hardness procedures; all other field data are collected in-situ and meters are allowed to equilibrate until measurement drift is minimal.
- DUP / SPLIT: Duplicate samples are collected to evaluate analyst repeatability (precision) in field measurements. Sufficient sample water is procured and then mixed in a splitter churn. Turbidity, alkalinity, and hardness duplicates simply require repetition of their procedures by aliquotting water from the splitter churn. Care should be taken to ensure adequate homogenization and vessel cleansing between aliquots.
- REPLICATE: A replicate is one or more samples/measurements taken in different locations (width or length) or at different times. Replicate samples are designed to estimate the spatial and/or temporal in-stream variation affording assessment of the representativeness of a single grab sample or measurement. Spatial replicates are preferred. Procure replicate measurements at least 50 m from the original sampling site in an area of similar habitat. If within reasonable walking distance an area of similar habitat is unavailable, move upstream or laterally within the same habitat and obtain replicates from an undisturbed area. *In all cases, care must be taken to ensure replicates are taken from areas of similar habitat.* Indicate whether the

replicate is spatial or temporal (i.e., different locations or same location different time) by circling the appropriate term on the **Sampling Episode Sheet.**

- DO / DO % SAT: No Dissolved Oxygen or DO % Saturation measurements should be entered for the Blank or DUP / SPLIT. Record the DO and DO % SAT values observed at the replicate location.
- TURB: A sample of DI water should be measured and recorded. This will evaluate the meter as well as the vial used in the reading. Two aliquots from the splitter-churn should be measured and recorded: the first constitutes the sample reading on the **Site Collection Sheet** and the other is recorded as the duplicate measurement under the DUP / SPLIT column. Measure and record the turbidity at the replicate location under the Replicate column.
- ALK: A sample of DI water should be measured and recorded. This will evaluate the equipment as well as technician technique. Two aliquots from the splitter-churn should be measured and recorded: the first constitutes the sample reading on the **Site Collection Sheet** and the other is recorded as the duplicate measurement under the DUP SPLIT columns. Measure and record the alkalinity at the replicate location under the Replicate column.
- HARDNESS: A sample of DI water should be measured and recorded. This will evaluate the equipment as well as technician technique. Two aliquots from the splitter-churn should be measured and recorded: the first constitutes the sample reading on the **Site Collection Sheet** and the other is recorded as the duplicate measurement under the DUP SPLIT columns. Measure and record the hardness at the replicate location under the Replicate column.
- COND: Measure and record the conductivity at the replicate location under the Replicate column.
- pH: Measure and record the pH at the replicate location under the Replicate column.
- Flow Measure and record the flow at the replicate location under the Replicate column

CALIBRATION CHECK: To ensure meters are functioning within manufacturer specifications, a daily calibration/calibration check is required prior to commencing sampling activities for the day. Data documenting that calibration checks are completed and sensors are operating within manufacturer specifications is a critical QA procedure. It is important to complete the calibration checks in the order listed on the sampling episode sheet as the readings of some sensors are dependent on other sensors. Following calibration checks, if sensors are reading outside manufacturer specifications, 'yes' should be recorded in the reconditioning necessary field. Reconditioning of sensors should take place according to manufacturer guidelines (YSI 2010). Additional information on calibration can be found in the SOPs for each parameter.

- Temperature Temperature is an extremely important measurement for appropriate meter function. Calibration check consists of comparing temperature to an NIST thermometer. The NIST thermometer temperature, sensor temperature and the difference should be recorded. A difference of >0.5 ºC requires sensor reconditioning, and 'yes' should be filled in the 'Reconditioning Necessary' field.
- Conductivity Conductivity calibration should be checked daily prior to commencing sampling activities, but should rarely require calibration. The conductivity standard, sensor-measured conductivity and difference should be recorded. If the sensor is reading outside the greater of 10 uS/cm or 1% off the standard solution then calibration is necessary. Conductivity should be calibrated as specific conductance. Following calibration the sensor reading and the cell constant should be recorded. If the cell constant falls outside 4 to 6 then 'yes' should be filled in the 'Reconditioning Necessary' field.
- pH: pH should be calibrated daily prior to commencing sampling activities. Record the sensor value in mV for all calibration standards used. A two-point calibration can be used if the standard values will bracket all readings for the day. Otherwise, a three-point calibration is necessary. Record the slope in mV and the % of ideal in the appropriate fields. The slope should read between 55 and 60. If the slope falls outside the acceptable range, then 'yes' should be filled in the 'Reconditioning Necessary' field
- DO: DO should be calibrated daily prior to commencing sampling activities. Following calibration, the DO reading taken in the calibration chamber should be compared with the theoretical DO based on P_{O2}, altitude, and temperature (ºC). Theoretical DO is calculated using the tables in Appendix 4.1 of this SOP. Record theoretical DO, altitude and temperature in the appropriate fields. Record the pre- and post- calibration values for DO

and the DO sensor current. Record the difference between theoretical DO and the post-calibration sensor reading. If post calibration and theoretical DO values differ by more 5% or the sensor current falls outside the range of 4.31 to 8 uA then 'yes' should be recorded in the 'Reconditioning Necessary' field.

- TURB: The turbidity meter should be compared to the StablCal calibration standards. The gel standards should be calibrated each quarter at the calibration session. Record the calibrated value for each gel standard next to the appropriate NTU value in the "Standards" column. This value should be written on the cap of the StablCal. Read the standards and record the values under the Sensor (Pre) column. Record the difference between the standard value and the meter reading. If the initial reading deviates by more than the greater 5% of 1 ntu from calibrated value, then the unit and standards may need to be recalibrated. Clean the outside of the standards and inspect for scratches or other factors that may influence the reading. Following cleaning, if the meter is still reading outside accuracy specifications, record 'yes' in the reconditioning necessary field. Do not recalibrate the unit using the standards.

FIELD & MISCELLANEOUS COMMENTS:

- WQ EQUIPMENT ID: Each meter will be given a three-digit WQ (water quality) meter ID number. This number should be etched on the meter housing. If your meter does not have a WQ#, contact the Quality Assurance Officer and/or the Monitoring Coordinator immediately. Record these numbers in the blanks provided. These numbers will be used to track the performance of the meter.

- COMMENTS: In this section, record any important information observed during the sampling episode. For instance, general weather conditions in the vicinity of the sample location over the past week or so, and major changes in land use need to be recorded. In addition, any information pertaining to QA/QC procedures must be reported. Particular problems associated with a meter, corrective actions performed, calibrations, and any other information deemed important should be recorded. Use the back of the sheet if necessary.

1.8.2 Site Collection Sheet

The **Site Collection Sheet** is the field data sheet for a specific sampling location. A **Site Collection Sheet** will be completed for every location visited. The purpose for the **Site Collection Sheet** is to organize all the information on one central page and to generate consistent observations in the field. If a site is visited but no collection is made, at a minimum the header information of the **Site Collection Sheet** should be completed, as well as site conditions, and it is important to record detailed comments as to why no collection was made at that site.

A copy of the form is found in the **SOP Appendix: Data Sheets**.

The following bullets will describe how the sheet should be completed.

DATA SHEET HEADER INFORMATION:

- SITE NAME: Record the stream name from the USGS 7-1/2' map name. If a county map, soil map, or other map has a different name, the USGS 7-1/2' map takes precedence. If there is not an official name on the USGS map, refer to the site as the Unnamed Trib. to the XYZ (nearest named creek) Creek.
- WBID #: Record the Waterbody Identification number.
- LEGAL/COUNTY: Record the legal description down to at least 1/8 section including county of site.
- DATE: Record the site date in MM/DD/YR format.
- COC #: Record the Chain of Custody form number for each of the corresponding data collections.
- TIME: Record the site time in military format. The "site time" is when initial activities began at the site.
- INVESTIGATORS: Record the names of all people involved with this sampling event; the "crew leader" (the person responsible for data custody and reporting) should be circled on the form. It is appropriate to use initials for investigators employed by the Water Quality Division.

FIELD OBSERVATIONS:

Completed Site Activities:
This section is very important as it allows the Data Manager to properly identify and track all the activities completed at each site. For instance, if flow was measured using a flow meter, fish were collected, and a long habitat assessment conducted, these three activities will be checked as completed activities. It is important to note that for each site activity completed a corresponding field data sheet will be included, which is further discussed in the **Data Management & Records Management** section, as there are exceptions to the rule.

- WATER QUALITY SAMPLES — Check here if water samples are collected for submittal to a lab for analysis.
- COLLECTION CODE — If Water Quality Samples are checked, a collection code must be recorded based upon the type of water sample that was collected. For example, if it was a grab sample circle 010, if it was an autosampler sample, circle 041. Refer to the Appendix for a complete listing of codes, and write code if not able to circle appropriate code.
- BACTERIA COLLECTION — Check here if water is collected using sterile containers for bacterial analysis.
- FLOW — Check here if flow is measured by one or more of the methods provided: Estimated (EST), Semi-Submergible Object/Timed (SS OBJ/TIMED), Flow Meter (Meter), or Autosampler.
- BUG COLLECTION — Check "Bugs" if benthic macroinvertebrates are collected. If conditions are not appropriate to collect bugs, check "Bugs Not Collectable."
- FISH COLLECTION — Check here if fish are collected via shocking and/or seining.
- PHOTOGRAPHS — Check here if photos are taken for any reason.
- HABITAT ASSESSMENT — Check here if an In-Stream Habitat Assessment is performed.
- OTHER — Record any other activities performed, including but not limited to: priority pollutants, SPMDs, bioassay, sediment, and pesticides. Use the comments section if necessary to properly define the additional activity performed.

Stream Site Observations:
Circle the number in front of each observation that is applicable. Be sure to discuss the rationale for circling each observation in the comments section and record the approximate stream length affected for each observation circled.

1. TOTAL LENGTH OF…: Record the length of stream evaluated that was used in the observation process in meters.
2. CLEAN: Circle if the site is free from observable anthropogenic (or natural) pollution or excessive detritus; e.g. no observable trash, foam, oil, excessive algae, etc.
3. MANURE IN STREAM: Circle if animal manure is observed in the stream or riparian area. In the comment section, be sure to identify the number of cow pies or quantity of waste observed.
4. UNSIGHTLY APPEAR: Circle if water color is unusual, excessively turbid, or otherwise odd in appearance.
5. FOAM/SCUM: Circle if there is a presence of floating foam or heavy scum.
6. FLOATING DETRITUS: Circle if there are large or excessive amounts of "naturally" occurring debris (leaves, woody debris etc.).
7. TRASH: Circle if anthropogenic litter (cans, plastics, tires, large household items, etc.) is observed either floating or submerged or on the bank and riparian zone.
8. SIGNIFICANT ALGAE: Circle if algae >0.5 cm thick when measured perpendicular to the substrate or visible greenish plankton is observed.
9. FISH KILL: Circle if a fish kill is observed. Report observation to the Monitoring Coordinator.
10. DEAD ANIMAL(S): Circle if dead animals, other than fish, are observed in the creek or in the bank-full channel.
11. IRON PRECIPITATES: Circle if there are significant quantities of iron oxyhydroxides due to iron precipitation commonly associated with acid mine drainage.
12. SILTATION: Circle if there is fine sediment buildup in the form of banks and bars and/or the substrate is embedded in fine sediment.
13. FLOW ALTERATION: Circle if the flow path has been modified or altered in some way—channelized, dammed, or other.

14. HABITAT ALTERATION: Circle if the in-stream or riparian zone habitat has been adversely changed/modified.
15. OIL FILM/GREASE: Circle if an oil sheen or petroleum products are observed; do not confuse with iron bacteria. **Iron bacteria sheens will break into jagged or rough edged pieces when stirred with a stick/finger, while oil film/grease will not break apart but remain a coagulate sheen that flows with the stirring device.**
16. OFFENSIVE ODOR: Circle if the smell of the creek is particularly fetid or foul smelling.
17. EXOTIC SPECIES: Circle when unusual, unacceptable, and/or unexpected exotic species (e.g., zebra mussels) are observed and there is an associated and severe impact on the habitat or aquatic community, record observed species in the comments section. Consult with the Monitoring Coordinator before using as a Source Code in the 319 Assessment Report.
18. OTHER: Circle when some other significant observation needs to be explained. Provide explanation in the comment box at the bottom of the sheet.
19. RECENT CATTLE Circle if evidence of recent in-stream cattle activity is observed, such as manure, fresh prints, or actual sighting of cattle.

Air Temperature:
Record the air temperature only in degrees Celsius. The reading should be made with a dry thermometer in the shade.

Weather:
Refers to the general weather conditions observed at the time of sampling. Circle ONLY ONE of the appropriate numbers, whichever most clearly describes the weather condition for that site.

1. FAIR SKIES: Circle if skies are clear or cloudy with no obvious indicators of foul weather.
2. OVERCAST: Circle if skies are cloudy with the indication of foul weather
7. RAIN: Circle if there is a consistent shower of rain.
8. HEAVY RAIN: Circle if there is a consistent shower of rain of significant intensity—downpour/thunder storm.
9. SNOW/SLEET/ICE: Circle if it is snowing, sleeting, hailing, or freezing rain.

Canopy Cover:
Canopy cover refers the amount of shading or light interception that is occurring in the general location where the sample is being collected. Canopy cover should be estimated based on the actual shading conditions at the time of collection—this may vary seasonally with the presence or absence of leaves. The intent of this measurement is to be able to correlate the amount of light reaching the water surface, and it is also relevant for DO observations. Circle the appropriate number; select ONLY ONE.

1. SPARSE: No cover to partial shade; >0 - 10% canopy cover.
2. MODERATE: Some amount of shade; >10 - 40% canopy cover.
3. SIGNIFICANT: Sizable amount of shade; >40 - 60% canopy cover.
4. DENSE: Dense shade; >60% canopy cover.
7. EXTREMELY DENSE: Extremely dense shade; ≥80% canopy cover

Periphyton Information:
This is a qualitative assessment of a small section of a stream intended to provide insight into nutrient enrichment by observing a component of its primary productivity. Circle the appropriate number if applicable for the site.

Periphyton Habitat Observed: Circle **all** habitats where observing periphyton.

Periphyton Density: Indicates the presence and type of periphyton in the stream. Circle the appropriate description for each type: “absent”, “sparse”, “moderate”, or “abundant”:

1. ABSENT: Circle if there is no observable algae.
2. SPARSE: Circle if there is a thin film of algae that cannot be measured by holding a ruler perpendicular to the surface of the substrate.
3. MODERATE: Circle if there is a “moderate” film of algae; the thickness of the attached algae does not exceed 5 mm.

4. ABUNDANT: Circle if there is an "abundant" film of algae; the thickness of the attached algae exceeds 5 mm.

Macroperiphyton In-Stream Cover %: Refers to the aerial percent of the substrate that is covered with readily visible algae. Write in the approximate percent of the substrate that is covered by this type of algae. (Macroperiphyton has no accepted taxonomic or scientific meaning; it is a descriptive term used by OCC-WQ.).

Macroperiphyton Type: If a percentage value >0 was entered in the Macroperiphyton section, then a type of periphyton must be circled. Record whether the general type and relative dominance of the periphyton community is "Common" or "Present."

- FILAMENTOUS — hair-like strands, usually bright green
- NON-FILAMENTOUS — not stringy, more gelatinous, film or fuzzy appearance on substrate
- AQUATIC MOSS — true moss, true leaves and stems present

1--- COMMON — frequently observed
2--- PRESENT — occasionally observed

Physical/Chemical Data:
This information should be recorded as dictated by the QAPP, collection activity, and field conditions.

- DO: Both the amount of Dissolved Oxygen in mg/L (ppm) and the Percent Saturation must be recorded for each area as follows:
  - RUN: DO should be measured in a run above a riffle for general stream water quality sampling efforts.
  - RIFFLE: DO is sampled in a riffle when fish are collected. Otherwise, it's the second choice of instream habitat in which WQ sample event DO should be measured.
  - POOL TOP: DO is sampled at the pool top when fish are collected. Otherwise, it's the third choice of instream habitat in which WQ sample event DO should be measured.
  - POOL BOTTOM: DO is sampled at the pool bottom when fish are collected if water is greater than one half meter deep.
- WATER TEMP: Record the temperature in ^{o}C from the ProPlus meter.
- CONDUCTIVITY: Record the specific conductance in µS from the ProPlus meter.
- pH: Record the pH in SU from the ProPlus meter.
- ALK: Using an alkalinity titrator and appropriate multiplier, record the value in mg/L as $CaCO_3$.
- HARDNESS: Using a hardness titrator and appropriate multiplier, record the value in mg/L as $CaCO_3$.
- TURB: Using a turbidimeter, record the value in NTU (nephelometric turbidity units).
- TURBIDITY CAUSE: Indicate whether the cause of turbidity is related to "Organic" or "Inorganic" matter. "Organic" refers to planktonic algae (usually indicated by green color), bacteria, etc., while "inorganic" refers to clay and larger sized particles imparting a muddy appearance or hue to the water (particularly evident after runoff events).
- RAINFALL AFFECTED: Circle either Y (yes) or N (no) to indicate whether recent rainfall appears to be affecting the turbidity of the stream.

Flow Information:
Circle the appropriate description of stream flow. Circle if flow is an applicable measurement, or if flow is not applicable "X" out the section.

Stream Stage:
Circle ONLY ONE:

1. DRY: Circle if there is no observable water in the stream bed (no pools), stream appears to be completely dry or devoid of standing water.
2. NO FLOW: Circle if there is no measurable flow in the stream; pools are present, but no running water; or it is moving via the subsurface.
3. TRACE*: Circle if there is slight movement of water is detected, but it is too slow to measure accurately with a semi-submergible object. If this value is circled, write in an estimate of discharge in the blank to the right, as indicated by the asterisk*.

4. LOW: Circle if flow is below the seasonal base flow level.
5. BASE: Circle if flow is at the approximate seasonal base flow level.
6. SLIGHTLY ELEV: Circle if flow is above the seasonal base flow, but less than 4 inches above the norm.
7. ELEVATED: Circle if flow is above the seasonal base flow level (greater than 4 inches, 10 cm).
8. ELEV/NO FLOW: Circle if water is above the seasonal base level, but no flow is observed.
9. HIGH FLOW: Circle if flow is well above the seasonal base flow level (e.g. storm water runoff).

Stage Qualifier:
Circle ONLY ONE:

1. STABLE: Circle if there is no immediately anticipated change in the flow.
2. RISING: Circle if flow stage is increasing.
3. FALLING: Circle if flow stage is decreasing.
4. UNKNOWN: Circle if the flow stage is unascertained or not determined.

Discharge: Refers to stream discharge or volume of water per unit time (volumetric flow). Flow is recorded in cubic feet per second (CFS).

- DISCHARGE: If a Flow-Mate flow meter is used, a Flow Meter Data Sheet must be turned in. Calculation of flow will be performed by the database based on the information recorded on the flow sheet; therefore, it is not necessary to enter a value for discharge on the Site Collection Sheet. The OTT MF Pro stores all measurements and calculates flow. Therefore no Flow Meter Data Sheet is submitted, but it is necessary to enter a value for discharge on the Site Collection Sheet. Flow data collected with OTT MF Pro is then later downloaded and made available to the data manager.
- GAUGE HEIGHT: Record the OCC WQ staff gauge height if applicable. This value must be recorded if a staff gauge is installed at a site and no flow meter reading was taken due to high water or storm event.

Observed Landuse/Source of Impact:
In this section, record the landuse in the immediate vicinity of the sampling location. In general this refers to the visual distance (400 M) around the sampling point. Other significant land uses observed in the watershed should be recorded in the comments section. Information recorded in this section may be used in the 319 Assessment report. The field personnel can enter up to six (6) different landuse codes. Use the comment section if more space is needed.

Landuse Code: Record the source code in the blanks provided. The appendix has a listing of the source codes as listed in the 305 (b) guidance. If "natural" conditions are observed in the riparian area record "0000", or if the source is unknown record "9000". For all other land uses enter the source code. If you are uncertain, make a note in the comments section.

Landuse Qualifier: Estimate the degree of impact associated with the immediate land use by circling the appropriate number.

- 1 Circle if there is no visible impact; no observed effect on the beneficial uses.
- 2 Circle if there is probable impact; some effect on the beneficial uses—assumed.
- 3 Circle if there is definite impact; an obvious effect on the beneficial uses.

Calibration Data:
Use this section to record values from the meter, as indicated.

Comments:
Use this section to complement the specific information requested above. Add any observations you feel important or relevant to the data collection or for characterizing the site. If unable to perform sampling due to dry or no flow conditions, indicate such in comments. If any meters have malfunctioned or unable to collect flow measurements, indicate that here.

1.9 Data Management & Records Management

1.9.1 Data Organization

All of the field data sheets should be organized in a consistent manner prior to submission. For each sampling location, all of the field data sheets clipped together (e.g. with a paper clip or binder clip) with the appropriate **Site Collection**

Sheet. If an activity is performed and completed at a site, the corresponding Site Activity on the **Site Collection Sheet** will be checked (e.g. √ or *X)*. For instance, if flow was measured using a flow meter, fish were collected, and a long habitat assessment conducted, all three forms should be grouped with the specific **Site Collection Sheet** and these three Site Activities will be checked on the **Site Collection Sheet** as completed activities. It is important to note that if an activity was not performed or was incomplete, do not check that activity, as the Site Activities on the **Site Collection Sheet** are for completed activities only. Thus, in this example, **Site Collection Sheet** will be followed with a **Flow Meter Sheet**, **Fish Collection Sheet**, and **Stream Habitat Assessment Sheet**. All of the **Site Collection Sheets** with corresponding data sheets are then organized in date/time order. All of the grouped **Site Collection Data Sheets** should be clipped together (e.g. with a paper clip or binder clip) with that day's **Sampling Episode Sheet** on top. If any samples are sent to a lab for processing (e.g. water quality samples, fish collection, etc.) the pink copy or a Xerox copy of the Chain of Custody form(s) should be the last document for that Sampling Episode event.

Once all the information has been recorded on the appropriate sheets and the sheets properly organized, they should be stamped and placed in the fireproof file cabinet in the appropriate folder for QA and submission to the Data Manager for processing.

1.9.2 Chain of Custody Procedure

The handling of Chain of Custody forms should follow the procedures described in the **Chain of Custody and Sample Labeling SOP**.

2.0 QA/QC SECTION

2.1 Training

All field investigators will be trained to familiarize them with proper procedures used in recording field data. All field investigators are required to become familiar with the SOP documents. Prior to solo sample collection, field investigators are evaluated in a field setting for proper data recording techniques. Annual field audits are performed on field investigators to verify that the appropriate procedures outlined in the **Quality Management Plan** are being followed. The Data Manager should be consulted for issues regarding confusion over field data sheet completion.

2.2 Maintenance

All field investigators will be responsible for maintaining a set of the most recent and up-to-date field data sheets so that legible copies can be maintained without smudges or smearing.

2.3 QC Procedures

The data collection process will be evaluated by the Data Manager and/or Data Technician with every data submission. If glaring mistakes are observed, the data management personnel will reject the data submission and/or consult the Quality Assurance Officer and/or the Monitoring Coordinator. Less obvious mistakes will be flagged and forwarded to the Quality Assurance Officer for appropriate action and resolution.

3.0 REFERENCES

APHA, AWWA, and WPCF (1992) Standard Methods for the Examination of Water and Wastewater, 15th edition, eds. L.S. Clesceri, A.E. Greenberg, and R.R. Trussell, American Public Health Association, Washington, D.C.

Csuros, M. (1994) Environmental Sampling and Analysis for Technicians, Lewis Publishers, Boca Raton.

YSI (2010) YSI Professional Plus: Calibration Tips, Yellow Spring Instruments Co. Inc., Yellow Springs Ohio.

4.0 APPENDIX

4.1 Dissolved Oxygen tables

Table I
Solubility of Oxygen in Fresh Water

TEMP °C	Mg/L DO	TEMP °C	Mg/L DO
0	14.60	23	8.56
1	14.19	24	8.40
2	13.81	25	8.24

3	13.44	26	8.09
4	13.09	27	7.95
5	12.75	28	7.81
6	12.43	29	7.67
7	12.12	30	7.54
8	11.83	31	7.41
9	11.55	32	7.28
10	11.27	33	7.16
11	11.01	34	7.05
12	10.76	35	6.93
13	10.52	36	6.82
14	10.29	37	6.71
15	10.07	38	6.61
16	9.85	39	6.51
17	9.65	40	6.41
18	9.45	41	6.31
19	9.26	42	6.22
20	9.07	43	6.13
21	8.90	44	6.04
22	8.72	45	5.95

Table I (above) and Table II (below) allow for the calculation of theoretical DO. Following calibration the DO should be within 5% of theoretical DO. Table I shows DO solubility at temperatures ranging from 0°C to 45°C. Table II shows the correction factor that should be used to correct the calibration value for the effects of atmospheric pressure or altitude. Select the relevant altitude and read across the table to identify the correction factor. Multiply the temperature-specific DO solubility by the altitude-specific correction factor to calculate theoretical DO. When calculating theoretical DO, round to the nearest °C, and round altitude to the nearest value in Table II.

Table II
Correction for Atmospheric Pressure (YSI)

Altitude (ft.)	Correction Factor	Altitude (ft.)	Correction Factor	Altitude (ft.)	Correction Factor	Altitude (ft.)	Correction Factor
0	1.00	1100	0.96	2300	0.92	3500	0.88
100	1.00	1200	0.96	2400	0.92	3600	0.88
200	0.99	1300	0.95	2500	0.91	3700	0.87
250	0.99	1400	0.95	2600	0.91	3800	0.87
300	0.99	1500	0.95	2700	0.91	3900	0.87
400	0.98	1600	0.94	2800	0.90	4000	0.86
500	0.98	1700	0.94	2900	0.90	4100	0.86
600	0.98	1800	0.94	3000	0.90	4200	0.86
700	0.97	1900	0.93	3100	0.89	4300	0.85
800	0.97	2000	0.93	3200	0.89	4400	0.85
900	0.97	2100	0.93	3300	0.89		
1000	0.96	2200	0.92	3400	0.88		

4.2 Source Codes from the Waterbody System

0100 Industrial Point Sources
0110 Major Industrial Point Sources
0120 Minor Industrial Point Sources
0200 Municipal Point Sources
0210 Major Municipal Point Sources
0220 Minor Municipal Point Sources
0230 Package Plants (Small Flows)

0400 Combined Sewer Overflow
0900 Domestic Wastewater Lagoon
1000 Agriculture
1100 Non-irrigated Crop Production
1200 Irrigated Crop Production
1300 Specialty Crop Production (e.g., horticulture, citrus, nuts, fruits)

1400 Pastureland
1500 Rangeland
1510 Riparian Grazing*
1520 Upland Grazing*
1600 Animal Operations*
1620 Concentrated Animal Feeding Operations (permitted, point source)*
1640 Confined Animal Feeding Operations (NPS)*
1700 Aquaculture
1800 Off-farm Animal Holding/Management Area*
1900 Manure Lagoons
2000 Silviculture
2100 Harvesting, Restoration, Residue Management
2200 Forest Management (e.g., pumped drainage, fertilization, pesticide application)*
2300 Logging Road Construction/Maintenance
2400 Silvicultural Point Sources
3000 Construction
3100 Highway/Road/Bridge Construction
3200 Land Development
4000 **Urban Runoff/Storm Sewers**
4100 Nonindustrial Permitted
4200 Industrial Permitted
4300 Other Urban Runoff

6700 Septage Disposal
7000 **Hydromodification**
7100 Channelization
7200 Dredging
7300 Dam Construction
7350 Upstream Impoundment
7400 Flow Regulations/Modification
7550 **Habitat Modification (other than Hydromodification)***
7600 Removal of Riparian Vegetation
7700 Streambank Modification/Destabilization
7800 Drainage/Filling of Wetlands
7900 **Marinas**
8100 **Atmospheric Deposition**
8200 Waste Storage/Storage Tank Leaks
8300 Highway Maintenance and Runoff
8400 Spills
8500 **Contaminated Sediments**
8600 **Natural Sources**
8700 Recreational Activities
8900 Salt Storage Sites
8910 Groundwater Loadings
8920 Groundwater Withdrawal
8950 Other*
9000 **Unknown Source**

0000 **Natural Conditions**

5000 **Resource Extraction**
5100 Surface Mining
5200 Subsurface Mining
5300 Placer Mining
5400 Dredge Mining
5500 Petroleum Activities
5600 Mill Tailings
5700 Mine Tailings
5800 Acid Mine Drainage
6000 **Land Disposal**
6100 Sludge
6200 Wastewater
6300 Landfills
6400 Industrial Land Treatment
6500 Onsite Wastewater Systems (Septic Tanks)
6600 Hazardous Waste

4.3 Sample Collection type code numbers

CODE NUMBER	SAMPLE COLLECTION TYPE	GEAR TYPE	DESCRIPTION
010	Grab Sample	Sample container	Sample taken at one location in the waterbody without necessarily accounting for spatial or temporal influences. One point in time. (Refer to SOP IIA-01)
020	Width/Depth Integrated	Depth intergraded sampler e.g. bomb	A composite sample taken that accounts for spatial variability along the vertical and horizontal axis. (Refer to SOP. (Refer to SOP IA-06)
030	Time Interval—manual	Sample container	A composite sample manually collected based on a predetermined time interval. (Refer to the QAPP)
031	Time Interval—automated	Automated sampler	A composite sample automatically collected based on a predetermined time interval. (Refer to the QAPP)
040	Discharge Interval—manual	Sample container	A composite sample manually collected based on a predetermined discharge value(s). (Refer to the QAPP)
041	Discharge Interval—automated	Automated sampler	A composite sample automatically collected based on a predetermined discharge value(s). (Refer to the QAPP)
050	Time/Discharge	Automated sampler	A composite sample automatically collected based on a set time period and accounting for discharge variability. (Refer to the QAPP)
060	Width Interval	Depth specific sampler (Van Dorn, Kemmerer)	A composite sample collected at predetermined point(s) along the width of a waterbody at a specific depth. (Refer to the QAPP)
070	Depth Interval	Depth specific sampler (Van Dorn, Kemmerer)	A composite sample collected at a specific depth in the waterbody. (Refer to the QAPP)
080	Single Stage Sample	Stage Sampler	A sample that is collected when the waterbody stage reaches a predetermined height. (Refer to the QAPP)
081	Multiple Stage Sample	Stage Sampler	A composite sample collected at 2 or more predetermined levels. (Refer to the QAPP)
090	Point/Pipe Sample	Sample container	A sample that is collected at a specific point, pipe or well where spatial variability is limited. (Refer to the QAPP)
100	Not assigned	NA	

OKLAHOMA CONSERVATION COMMISSION
WATER QUALITY DIVISION

STANDARD OPERATING PROCEDURE

FISH COLLECTION
(Seining and Electrofishing)

1.0 PROCEDURAL SECTION

1.1 Scope and Application[7],[8]

Fish assemblage monitoring is an integral component of the Oklahoma Conservation Commission's Water Quality program. Assessment of the fish assemblage measures the structure and function of the ichthyofaunal community to evaluate the integrity of a stream. Sampling occurs during the summer period, as defined below, with care to avoid collection in waters with sensitive species or species of concern earlier than June 1.

1.2 Summary of Method

The collection of fish follows a modified version of the EPA Rapid Bioassessment Protocol V (EPA, 1999) supplemented by other documents. Specific techniques for, and relative advantages of seining and electrofishing vary considerably according to stream type and conductivity. The specifics are discussed in detail in Fisheries Techniques (edited by L.A. Nielsen and D.L. Johnson and published by the American Fisheries Society 1983).

The collection of fish involves the use of two collection methods, seining and electroshocking. The combination of methods was selected in order to produce a representative fish collection. Variations of habitat, type of fish, and water chemistry dictate the use of different collection techniques. In general, each stream is sampled for a distance of 400 m. Both techniques are used at each site when practical, in attempt to reduce gear bias or selectivity to the extent possible. Occasionally site conditions will limit the effectiveness of one form of sampling or the other, to the point of rendering them impractical or unsafe. These judgments will be determined by the crew chief or the crew member most experienced with the site.

Seining can be broadly defined as the use of a net, manually pulled through the water, in attempt to encircle and capture fish. Seine height is dictated by water depth, and length is determined by width of the water being sampled. If possible, the seine should be 15-25% longer than the width of the waterbody being sampled and about 25% higher than the depth of the water. The seine is hauled with the current because fish tend to orient towards the current.

Electrofishing can be defined as the use of electrical current passed through the water, in a controlled manner, in an attempt to momentarily stun fish, rendering them easy to capture. Electrofishing can be accomplished using three different methods and equipment types: (1) backpack shocker, (2) tote barge, or (3) boat shocker. The backpack shocker is the primary means of electrofishing and consists of a trailing stainless steel cable electrode and ring electrode mounted on the end of a fiberglass pole. The ring should be substituted with a diamond shaped array when sampling in waters of higher conductivity (>1000 µS/cm). The shocking team consists of at least two people. One carries and operates the shocker while the other(s) net stunned fish. The shocker is most useful where a seine cannot be used effectively in areas such as brush piles, root wads, and cobble substrates. The forward electrode is gradually passed back and forth as the team walks downstream. As fish are stunned, they usually roll over and become more visible, allowing the netters to see and capture them.

In waters of high conductivity (> 1000 µS/cm) the effectiveness of electroshocking declines. Under these conditions, electrofishing may be limited to targeted shocking in shallow habitat that is not possible to seine. At high conductivity levels it is up to the discretion of the crew leader, whether electrofishing is effective. The backpack shocker is rated for use up to 2150 µS/cm, and should not be used at higher conductivity levels. The backpack system's level of power and size of field is designed for and works well in narrow (<15 meter wide) streams with short wadeable pools and numerous riffles. Stream channels that are wider, with longer pools and fewer and shorter riffles that still meet wadeable criteria, require a larger electrical field and more power than can be supplied by a backpack shocker. Additionally, if 30-40% percent of the reach to be sampled is greater than the depth of the shortest crew member's elbow, an alternate shocking technique should be used.

In deep or wide streams where backpack shocking is impractical, the OCC employs the use of a tote barge. The barge system is powered by a 5500 watt (10horsepower) generator and is housed in a 4x5'x12"plastic tub. The barge allows for reasonable mobility of the large (>100lb) generator. The system includes a handheld anode pole, identical in scope and design to that described for the backpack system, but connected by a 50' cable. The cathode consists of an electrically connected aluminum grid system mounted to the bottom of the barge (below waterline). A pull rope is attached to the front of the barge to allow the team to pull the barge across short riffles and other obstacles when necessary. The increased power of the larger generator not only enables the crew to improve its efficiency in open water but is also helpful in mitigating the effects of increased conductivity

[7] Text taken directly or in part from "Rapid Bioassessment Protocols for Use in Wadeable Stream and Rivers, 2nd Edition", US EPA 841-B-99-002 July 1999

[8] Text taken directly or in part from Dan Butler, Senior Biologist, Oklahoma Conservation Commission (2000)

when encountered. Due to safety concerns the barge team should include an additional crew member responsible for overseeing the safety of the crew and monitoring the control box (and the emergency shut-off switch)

Occasionally, fish surveys must be completed on stream reaches that offer very limited wading potential. When presented with this obstacle, we employ the use of a boat mounted electrofishing system. The system includes a 3250 watt generator, a single bow mounted anode pole/array, and a control. The aluminum boat hull, which houses the electrofishing system, acts as the cathode. The boat is equipped with a raised deck and safety rail. The primary netter(s) position themselves on the deck. The current is activated when one of the netters stands on a pressure activated switch, completing the circuit. The boat is propelled by a small outboard motor. The navigator maneuvers the boat in a way that positions the anode in or near habitat. When riffles or other areas of shallow water are encountered, the system comes equipped with a junction box, which allows the user to quickly convert from a bow mounted anode to a handheld anode attached by a 50' cable. This enables a crew, wearing chest waders, to use the boat in a very similar manner as the tote barge. Electroshocking from a boat requires at least three crew members.

In general, all fish are placed in 10% formalin immediately after capture. However, if larger fish (> 100 g) can be positively identified in the field, they are returned to the water in a location where recapture is unlikely. All large fish released are photographed. A representative photograph is taken when large numbers of one fish species is collected and released. Collected organisms are identified to species by an experienced taxonomist.

1.2.1 Definitions

- Summer Collection Period: **May 15*** to **October 31**
  **waters containing sensitive species or species of concern will not be sampled before June 1 to avoid disruption of spawning*

1.3 Health and Safety Warnings

- Primary responsibility for safety while electroshocking rests with the team leader.
- All crew members should receive training in First Aid and CPR. Electro-fishing units have a high voltage output and may deliver dangerous electrical shock. Electric shock can cause heart fibrillations and/or death.
- While electrofishing, avoid contact with water unless sufficiently insulated against electric shock. Use chest waders with non-slip soles and water-tight rubber gloves that cover to the elbow. If they become wet inside, stop fishing until thoroughly dry.
- Avoid contact with anode at all times. <u>At no time while electrofishing should a crewmember reach into the water for any reason.</u>
- The electrofishing equipment provided is equipped with a 45 degree tilt switch which interrupts the current. Do not make any modifications to the electrofishing unit, which would make it impossible to turn off the electricity.
- General safety guidelines should be observed. If waders or gloves develop leaks, leave the water immediately. Avoid operating electrofishing equipment near people, pets or livestock. Discontinue any activity in streams during thunderstorms or heavy rain. Rest if crew becomes fatigued.
- Decision to use electrofishing equipment will depend on size of site, flow, conductivity and turbidity. If the specific conductivity is below 10 μS or > 1000μs; if the flow is too high; if the site is too deep; if the water is too turbid to assure safe footing or locate stunned fish, the crew may consider using the seine only or determine that site cannot be sampled. <u>This is a safety decision.</u>
- Formalin is a carcinogen and can also cause permanent damage to mucous membranes and eyes. Care must be taken when placing fish in formalin so that the fish does not flop around and splash formalin onto people near the jar. Proper precautions should be taken when handling formalin.
  - Protective gloves and eyewear should be worn
  - Avoid inhalation of vapors
- <u>FAILURE TO OBSERVE SAFETY PROCEDURES WILL RESULT IN DISCIPLINARY ACTIONS INCLUDING PROBATION AND DISMISSAL.</u>

1.4 Cautions

- Do not collect fish without the permission of the Monitoring Coordinator, who will have obtained the appropriate permits.
- Do not sample in waters containing sensitive species or species of concern before June 1 to avoid disruption of spawning.

1.5 Interference

- Seine effectiveness is limited by physical obstructions including rocks, sticks, logs, thick vegetation, or anything that would impede the progress of the net. And can also include extreme (>1.5 m) depth and water velocity (>3fps).
- Backpack shocker effectiveness declines above conductivity levels greater than 1,000 μS/cm, and should not be used above 2,150 μS/cm

- Tote barge and boat shockers allow for sampling at higher conductivity levels, but should not be used in waters with higher conductivity than the manufacturer's specifications.

1.6 Personnel Qualification

Field personal must be trained and evaluated on sample collection techniques. Sample collection is subject to approval by the QA Officer and/or Monitoring Coordinator. Training will be done through dry run exercises in the field to familiarize field personnel with procedures and techniques.

1.7 Apparatus & Materials

Clothing

Rubber Gloves	as many pairs as the shocking crew consists of
Waders	as many pairs as the shocking crew consists of, although everyone is responsible for their own waders
Goggles	for use in mixing formalin

Documentation

Field data sheets	**Sampling Episode Sheet, Site Collection Sheet, Flow Meter Sheet** and **Fish Collection**
Waterproof paper	for labels inside jar
Pencils	labeling
Sharpie® pen	for labeling jar
Extra white paper	used for a background for fish pictures
Clipboard	
Camera	
Tape measure	to record lengths of released fish if desired

Chemicals

10% buffered formalin

Shocker

Smith Root LR24 backpack shocker system OR
Smith and Root VVP tote barge system mounted on 4'X5'X12' plastic tub housing OR
Midwest Lake Electrofishing system mounted on a 4'X12' aluminum boat.

Nets

4 x 10, 6 x 10, 4 x 20, and 6 x 20 seines and any other seines that are preferred by the crew leader. All seines should be ¼ inch mesh.
Dip nets to collect shocked fish

Containers

Wide mouth 1-gallon jars, at least 4 per site
1 or 2 liter graduated cylinder for mixing 10% formalin (37% formaldehyde)
Whirl-Paks for putting special fish in

Instruments

DO meter
pH meter
Conductivity meter
Turbidity meter
Alkalinity test kit
Flow meter

1.8 Instrument/Method Calibration

Refer to the appropriate SOP and/or owner’s manual.

1.9 Preparation

- A representative stream reach is selected and measured such that primary physical features are included in the reach (riffles, runs, and pools)

- To the extent possible, the reach should be located away from the influences of major tributaries and bridge/road crossings. Bridges or road crossings may be unavoidable due to stream depth, access restrictions and/or tributary location. Best professional judgment may be necessary to locate the most representative stream reach, and any deviation from an ideal reach should be documented.
- In general, each stream is sampled for a distance of 400 m.

Seining

- Seine height is dictated by water depth, and length is determined by width of the water being sampled. If possible, the seine should be 15-25% longer than the width of the waterbody being sampled and about 25% higher than the depth of the water. The amount of obstructions in the stream will often preclude the use of longer seines however. When this situation occurs, the crew leader will decide on the most effective combination of seines. OCC utilizes 4 and 6 foot seines in 10, 20, and 30-foot lengths. This will allow the center of the net to form a bag behind the operators where the fish are more likely to stay in the net. The seine is hauled with the current because fish tend to orient towards the current.

Electrofishing

- The shocker is most useful where a seine cannot be used effectively in areas such as brush piles, rootwads, and cobble substrates.
- The choice of electrofishing method and equipment will depend on the stream to be sampled.
    1. For narrow (<15 meter wide) streams with short wadeable pools and numerous riffles, the backpack shocker is most appropriate. The shocker consists of a trailing stainless steel cable electrode and either a ring or diamond electrode mounted on the end of a fiberglass pole. In waters of extremely low conductivity (<40 uS) the ring should be used. In waters of high conductivity (>1000 uS) only the diamond should be used. In very deep water where the ring seems to be ineffective the diamond electrode may offer better results. The shocking team consists of at least two people. One carries and operates the shocker while the other(s) net stunned fish.
    2. In deep or wide streams where backpack shocking is impractical, the OCC employs the use of a tote barge. The system includes a handheld anode pole, identical in scope and design to that described for the backpack system, but connected by a 50’ cable. The cathode consists of an electrically connected aluminum grid system mounted to the bottom of the barge (below waterline). A pull rope is attached to the front of the barge to allow the team to pull the barge across short riffles and other obstacles when necessary. Tote barge electrofishing requires at least three crew members.
    3. In stream reaches that offer very limited wading potential, the boat mounted electrofishing system will be used. The system includes a single bow mounted anode pole/array. The aluminum boat hull, which houses the electrofishing system, acts as the cathode. When riffles or other areas of shallow water are encountered, the system comes equipped with a junction box, which allows the user to quickly convert from a bow mounted anode to a handheld anode attached by a 50’ cable. This enables a crew, wearing chest waders, to use the boat in a very similar manner as the tote barge. Boat electrofishing requires at least three crew members. In waters of high conductivity (>1000 µS/cm) electroshocking effectiveness declines, due to the highly conductive nature of the water. Under these conditions, it is up to the discretion of the crew leader if electrofishing is suitable. Electrofishing will not be completed at conductivity levels greater than the manufacturer's recommendation for the equipment.

1.10 Sample Collection

Seining

1. The seine should be manually pulled through the water. Since fish tend to orient towards the current, the direction of the seine haul should generally be with (in the same direction of) the current.
2. The lead line should be kept on the bottom, and in front of the float line.
3. If there are many obstructions on the bottom, the lead line will become caught or bounce and most fish will escape underneath the bottom of the net. If this happens use a smaller net that allows you to avoid obstructions or go to electroshocking.
4. The brailes of the net should be used to disturb the area under any undercut banks or beds of macrophytes near the edge, in order to scare fish hiding under cover out towards the middle of the net.
5. Under ideal conditions the net should be pulled through the water in the manner described above for about 10 meters and dragged out of the water on a gradually sloping pre-selected beach. The person pulling the seine on the side of the stream opposite the beach should swing ahead of the other person so that the seine is pulled out on the beach stretched over the same distance it was stretched in the stream.

6. If the stream does not have gradually sloping banks, the dip method should be used. This method consists of sweeping around and through the area to be sampled, keeping a wide bag and moving the lead line as much under the undercut bank as possible. Use the brailes to probe repeatedly as far as possible into the undercut area working towards each other until the brailes overlap. The seine should then be swiftly stretched and lifted vertically from the water. An alternative method of retrieving fish under these conditions is to slowly turn the brailes to wind the net up once they have overlapped to form an enclosure. This may entangle the fish with the net and allow them to be lifted out of the water with the rolled up net.

Shocking

1. Before operating or assisting with the shocker, READ AND UNDERSTAND THE MANUALS for the generator and the shocker. Starting procedures, safety procedures and troubleshooting are well documented in these manuals and are not spelled out in this text. The manuals can be obtained from the equipment file in the main office.
2. Collection begins at a shallow riffle or other physical barrier at the downstream limit of the reach, and terminates at a similar barrier at the upstream end of the reach.
3. In general, fish collection procedures commence at the downstream barrier and proceeds in an upstream direction; however, this is up to the discretion of the Crew Leader.
4. A minimum of two people is required for electrofishing.
5. The forward electrode should be gradually passed back and forth over the stream width, including brush piles and root wads. As fish are stunned, they will usually roll over and become more visible, allowing the netter(s) to see and capture them.
6. In very dense brush or root cover, fish often sense the presence of the team before they are close enough to be stunned and then retreat so deeply into cover that it is impossible to net them when they are stunned. It is often better in situations such as these to insert the electrode into the brush before it is turned on, give the fish a minute or so to get used to the new situation and then turn the current on. Many fish will be much closer to the edge of brush pile when they are stunned in this manner.

1.11 Sample Handling & Preservation

1. Fish collected by seining and electroshocking should be kept in separate jars and labeled as to what method was used to capture them. This will make the methods independent if desired for analysis.
2. Label each jug. Using a permanent marker, write the date, WBID #, collection time, stream name, number of jars composing one sample, county, legal location, and crew leader's name on the lid and side of the jug. In general all fish should be placed in 10% formalin immediately after capture. There are a few exceptions made for larger fish (>100 gms or 0.25 lbs), which can be positively identified in the field.
    a. If all team members agree on the identification of such a fish, it can be returned to the water far enough away that recapture is unlikely.
    b. All large fish released must be documented on the **Fish Collection Sheet**. This includes fish such as gars, all types of carpsuckers, black bass, any white bass in water where yellow bass or striped/white hybrids may be found, all buffalo, all redhorse, and any other unusual fish. Please note**,** the golden and black redhorse cannot be told apart without counting lateral line scales and pelvic rays. Unless this information is recorded on the **Fish Collection Sheet**, the fish must be brought in for identification, or recorded as *Moxostoma* sp. Similar notes must be taken when releasing other fish that can be difficult to tell apart in the field such as the river and shorthead redhorses or any of the buffalos.
    c. All large fish released must be photographed. It is important to take photos and label them so that they will be identifiable 5 to 7 years from now. Be sure to follow the Photodocumentation SOP. The photos are data, and should be labeled as to the ID of the fish in the picture, the date, WBID #, site time, stream name, county, and legal location of the site. One copy should be kept in the Crew Leader's files, and one should be forwarded to the Data Manager. In addition, note the photos on the **Fish Collection Sheet**.
3. When preserving fish much larger than 0.3 to 5 kg (0.5 to 10 lbs), the fish should be sliced open along the lower rib in order to allow the formalin to penetrate the body cavity fast enough to prevent decay. A slit through the ribs is preferred to a belly slit to facilitate counting belly scales in the lab.
4. Formalin is a carcinogen and can also cause permanent damage to mucous membranes and eyes. Care must be taken when placing fish in formalin so that the fish does not flop around and splash formalin onto people near the jar. The fish should be put into the jar with the lid tilted open away from the operator so that the lid shields the face and body of the operator. Flood any skin exposed to formalin with plenty of water as soon as possible. If it gets in your eyes, flood the eyes with water immediately and go to the doctor immediately after that.
5. Fill out a **Chain of Custody Form**.
6. The Crew Leader is responsible for transferring the samples to the Fish Sample Custodian.

1.12 Sample Preparation and Analysis

Not applicable

1.13 Troubleshooting
Consult owners' manuals and/or the Environmental Monitoring Coordinator

1.14 Data Acquisition, Calculation & Data Reduction
Not applicable

1.15 Computer Hardware & Software
Not applicable

1.16 Data Management & Records Management

1.16.1 Field Notation
All measurements and observations made at each site should be recorded on the **Site Collection Sheet** (see **SOP Appendix: Data Sheets**); include all physical and chemical information including DO for runs, riffles, pool top, and pool bottom—when available. Data should be recorded following procedures outlined in the **Procedure for Completing Field Data Sheets SOP**. A **Flow Meter Data Sheet** (see **SOP Appendix: Data Sheets**) should also be filled out; see the Flow Measurement for Wadeable Streams SOP. It is mandatory to follow the procedures outlined in the Photodocumentation SOP. Please note photos on the appropriate field sheets.

1.16.2 Fish Collection Sheet:
All observations should be recorded on the **Fish Collection Sheet** (see **SOP Appendix: Data Sheets**).

The following bullets will describe how the **Fish Collection Sheet** should be completed.

DATA SHEET HEADER INFORMATION:

- SITE NAME: Record the stream name from the USGS 7-1/2' map name. If a county map, soil map, or other map has a different name, the USGS 7-1/2' map takes precedence. If a stream is unnamed on the USGS map, but named on another map, use that name, but write the name of the map in parentheses beside the stream name.
- WBID #: Record the Water Body Identification number.
- LEAD INVESTIGATOR: Record the name of the person responsible for data custody and reporting
- DATE: Record the date in MM/DD/YY format.
- TIME: Record the site time in military format. The "site time" is when initial activities began at the site and should be the same on all forms associated with the site.

COLLECTION INFORMATION:
For each collection method used, fill in the appropriate specifications. For the backpack, tote barge and boat-mounted shockers, indicate:

- SHOCKING TIME Record the amount of time spent shocking in seconds
- VOLT/AMPS Record the voltage and amperage on the shocker
- PULSES/SECOND Record the pulses per second setting on the shocker (measure of wave frequency)
- %DUTY CYCLE % of on time; product of pulse width and frequency (the actual time the current is being delivered)
- REACH LENGTH Length of stream used in the fish collection

For the boat-mounted shocker only, also indicate:

- LOW RANGE or HIGH RANGE
- HANDHELD or UMBRELLA ARRAY PROBE.

If a seine is used, indicate:

- SEINING TIME Record the amount of time spent seining in minutes
- SEINE TYPE/SIZE Record the size and type of seines used

FISH IDENTIFIED & RELEASED:

- SPECIES Record the genus and species of the fish released or the common name if the species can be definitely identified later based on that common name

- COUNT — Record the number of individual organisms released
  - SHOCK — Number released during the shocking effort
  - SEINE — Number released during the seining effort
- COMMENTS — Record any information that was used to help in the identification process
- PHOTO ID # — Record the identification number that corresponds to OCCWQ photo tracking system. It is mandatory to follow the procedure outlined in the Photo-documentation SOP.

1.16.2 Habitat Form

At all sites where fish are collected, a stream habitat evaluation must be performed. It does not have to be done on the same day as the fish are collected, but should be done before major floods change the habitat. Refer to the Habitat Assessment SOP.

1.16.3 Chain of Custody Procedure

Collection of fish requires the use of a Chain of Custody form (COC). . The handling of COC should follow the procedures described in the **Chain of Custody and Sample Labeling SOP**. The manifest is routed as follows:

1. Fish samples are collected in the field and the COC is completed and signed by the field personnel involved with collection.
2. Samples are submitted to the Fish Data Custodian and the person receiving the samples signs the COC.
3. Processed samples are sent to the taxonomist for identification. The taxonomist must sign the COC.
4. After identification, taxonomic identification sheets will be forwarded with a copy of the signed COC to the Data Manager. The COC form returned from the laboratory will include the laboratory tracking or log number(s) used to reference the identification sheet.

2.0 QA/QC SECTION

2.1 Training

Training of field personnel will be done through dry run exercises in the laboratory and field to familiarize them with instrument operation, use, calibration and maintenance. All samplers should read Fisheries Techniques (edited by L.A. Nielsen and D.L. Johnson and published by the American Fisheries Society 1983) prior to collecting fish. All operators are required to become familiar with the SOP documents. Prior to solo sample collection, field personnel are evaluated in a field setting for proper use of equipment and sample collection protocol. Annual field audits are performed on sample collectors following procedures outlined in the **Quality Management Plan**.

2.2 Maintenance

- Maintain the shocking equipment per the owner's manual instructions
- Seines should be stored dry and tangle-free

2.3 QC Procedures

At least one temporal replicate sample should be collected per fish crew leader.. Replicate samples should be completed at the same reach as the original collection. When practicable, replicate samples should be taken during the same season and hydrologic period (i.e., not across major seasonal change such that rainfall and temperature are significantly different between the samples). Replicate sampling within four weeks is preferred.

3.0 REFERENCES

EPA, (1999) Rapid Bioassessment Protocols for Use in Wadeable Streams and Rivers, 2nd Edition, EPA 841-B-99-002, Office of Water, Washington, D.C.

Butler, D., (1999) Personal Communication, Senior Biologist, Oklahoma Conservation Commission, Oklahoma City, OK.

Nielsen, L.A. and D.L. Johnson, (1983) Fisheries Techniques, American Fisheries Society.

4.0 APPENDIX A

STANDARD OPERATING PROCEDURE
Field Summary

- Summer Collection Period: **May 15*** to **October 31**
  **waters containing sensitive species or species of concern will not be sampled before June 1 to avoid disruption of spawning*

Health and Safety Warnings

- Primary responsibility for safety while electroshocking rests with the team leader.
- All crew members should receive training in First Aid and CPR. Electro-fishing units have a high voltage output and may deliver dangerous electrical shock. Electric shock can cause heart fibrillations and/or death.
- While electrofishing, avoid contact with water unless sufficiently insulated against electric shock. Use chest waders with non-slip soles and water-tight rubber gloves that cover to the elbow. If they become wet inside, stop fishing until thoroughly dry.
- Avoid contact with anode at all times. <u>At no time while electrofishing should a crewmember reach into the water for any reason.</u>
- The electrofishing equipment provided is equipped with a 45 degree tilt switch which interrupts the current. Do not make any modifications to the electrofishing unit, which would make it impossible to turn off the electricity.
- General safety guidelines should be observed. If waders or gloves develop leaks, leave the water immediately. Avoid operating electrofishing equipment near people, pets or livestock. Discontinue any activity in streams during thunderstorms or heavy rain. Rest if crew becomes fatigued.
- Decision to use electrofishing equipment will depend on size of site, flow, conductivity and turbidity. If the specific conductivity is below 10 µS or > 1000µs; if the flow is too high; if the site is too deep; if the water is too turbid to assure safe footing or locate stunned fish, the crew may consider using the seine only or determine that site cannot be sampled. <u>This is a safety decision.</u>
- Formalin is a carcinogen and can also cause permanent damage to mucous membranes and eyes. Care must be taken when placing fish in formalin so that the fish does not flop around and splash formalin onto people near the jar. Proper precautions should be taken when handling formalin.
  - Protective gloves and eyewear should be worn
  - Avoid inhalation of vapors
- <u>FAILURE TO OBSERVE SAFETY PROCEDURES WILL RESULT IN DISCIPLINARY ACTIONS INCLUDING PROBATION AND DISMISSAL.</u>

Cautions

- Do not collect fish without the permission of the Monitoring Coordinator.
- Do not sample in waters containing sensitive species or species of concern before June 1 to avoid disruption of spawning.

Interference

- Seine effectiveness is limited by physical obstructions including rocks, sticks, logs, thick vegetation, or anything that would impede the progress of the net. And can also include extreme (>1.5 m) depth and water velocity (>3fps).
- Backpack shocker effectiveness declines above conductivity levels greater than 1,000 µS/cm, and should not be used above 2,150 µS/cm
- Tote barge and boat shockers allow for sampling at higher conductivity levels, but should not be used in waters with higher conductivity than the manufacturer's specifications..

Personnel Qualification

Field personal must be trained and evaluated on sample collection techniques. Sample collection is subject to approval by the QA Officer and/or the Environmental Monitoring Coordinator. Training will be done through dry run exercises in the field to familiarize field personnel with procedures and techniques.

Apparatus & Materials

Clothing

Rubber Gloves	as many pairs as the shocking crew consists of
Waders	as many pairs as the shocking crew consists of, although everyone is responsible for their own waders

Goggles	for use in mixing formalin

Documentation

Field data sheets	**Sampling Episode Sheet, Site Collection Sheet, Flow Meter Sheet** and **Fish Collection Sheet**
Waterproof paper	for labels inside jar
Pencils	labeling
Sharpie pen	for labeling jar
Extra white paper	used for a background for fish pictures
Clipboard	
Camera	
Tape measure	to record lengths of released fish if desired

Chemicals

Gasoline/oil mix for generator
Extra two stroke oil
10% buffered formalin

Shocker

Smith Root LR24 backpack shocker system OR
Smith and Root VVP tote barge system mounted on 4'X5'X12' plastic tub housing OR
Midwest Lake Electrofishing system mounted on a 4'X12' aluminum boat.

Nets

4 x 10, 6 x 10, 4 x 20, and 6 x 20 seines and any other seines that are preferred by the crew leader. All seines should be ¼ inch mesh.
Dip nets to collect shocked fish

Containers

Wide mouth 1-gallon jars, at least 4 per site
1 or 2 liter graduated cylinder for mixing 10% formalin (37% formaldehyde)
Whirl-Paks for putting special fish in

Instruments

Multimeter (DO, Conductivity, pH)
Turbidity meter
Alkalinity test kit
Flow meter

Preparation

- A representative stream reach is selected and measured such that primary physical features are included in the reach (riffles, runs, and pools).
- To the extent possible, the reach should be located away from the influences of major tributaries and bridge/road crossings. Bridges or road crossings may be unavoidable due to stream depth, access restrictions and/or tributary location. Best professional judgment may be necessary to locate the most representative reach, and any deviation from an ideal reach should be documented.
- In general, each stream is sampled for a distance of 400 m.

Seining

- Seine height is dictated by water depth, and length is determined by width of the water being sampled. If possible, the seine should be 15-25% longer than the width of the waterbody being sampled and about 25% higher than the depth of the water. The amount of obstructions in the stream will often preclude the use of longer seines however. When this situation occurs, the crew leader will decide on the most effective combination of seines. OCC utilizes 4 and 6 foot seines in 10, 20, and 30-

foot lengths. This will allow the center of the net to form a bag behind the operators where the fish are more likely to stay in the net. The seine is hauled with the current because fish tend to orient towards the current.

Electrofishing

- The shocker is most useful where a seine cannot be used effectively in areas such as brush piles, rootwads, and cobble substrates.
- The choice of electrofishing method and equipment will depend on the stream to be sampled.
    1. For narrow (<15 meter wide) streams with short wadeable pools and numerous riffles, the backpack shocker is most appropriate. The shocker consists of a trailing stainless steel cable electrode and either a ring or diamond electrode mounted on the end of a fiberglass pole. In waters of extremely low conductivity (<40 uS) the ring should be used. In waters of high conductivity (>1000 uS) only the diamond should be used. In very deep water where the ring seems to be ineffective the diamond electrode may offer better results. The shocking team consists of at least two people. One carries and operates the shocker while the other(s) net stunned fish.
    2. In deep or wide streams where backpack shocking is impractical, the OCC employs the use of a tote barge. The system includes a handheld anode pole, identical in scope and design to that described for the backpack system, but connected by a 50' cable. The cathode consists of an electrically connected aluminum grid system mounted to the bottom of the barge (below waterline). A pull rope is attached to the front of the barge to allow the team to pull the barge across short riffles and other obstacles when necessary. Tote barge electrofishing requires at least three crew members.
    3. In stream reaches that offer very limited wading potential, the boat mounted electrofishing system will be used. The system includes a single bow mounted anode pole/array. The aluminum boat hull, which houses the electrofishing system, acts as the cathode. When riffles or other areas of shallow water are encountered, the system comes equipped with a junction box, which allows the user to quickly convert from a bow mounted anode to a handheld anode attached by a 50' cable. This enables a crew, wearing chest waders, to use the boat in a very similar manner as the tote barge. Boat electrofishing requires at least three crew members.
- In waters of high conductivity (>1000 µS/cm) electroshocking effectiveness declines, due to the highly conductive nature of the water. Under these conditions, it is up to the discretion of the crew leader if electrofishing is suitable. Electrofishing will not be completed at conductivity levels greater than the manufacturer's recommendation for the equipment.

Sample Collection

Seining

- The seine should be manually pulled through the water. Since fish tend to orient towards to current, the direction of the seine haul should generally be with (in the same direction of) the current.
- The lead line should be kept on the bottom, and in front of the float line.
- If there are many obstructions on the bottom, the lead line will become caught or bounce, and most fish will escape underneath the bottom of the net. If this happens use a smaller net that allows you to avoid obstructions or go to electroshocking.
- The brailes of the net should be used to disturb the area under any undercut banks or beds of macrophytes near the edge, in order to scare fish hiding under cover out towards the middle of the net.
- Under ideal conditions the net should be pulled through the water in the manner described above for about 10 meters and dragged out of the water on a gradually sloping pre-selected beach. The person pulling the seine on the side of the stream opposite the beach should swing ahead of the other person so that the seine is pulled out on the beach stretched over the same distance it was stretched in the stream.
- If the stream does not have gradually sloping banks, the dip method should be used. This method consists of sweeping around and through the area to be sampled, keeping a wide bag and moving the lead line as much under the undercut bank as possible. Use the brailes to probe repeatedly as far as possible into the undercut area working towards each other until the brailes overlap. The seine should then be swiftly stretched and lifted vertically from the water. An alternative method of retrieving fish under these conditions is to slowly turn the brailes to wind the net up once they have overlapped to form an enclosure. This may entangle the fish with the net and allow them to be lifted out of the water with the rolled up net.

Shocking

- Before operating or assisting with the shocker, <u>READ AND UNDERSTAND THE MANUALS</u> for the generator and the shocker. Starting procedures, safety procedures and troubleshooting are well documented in these manuals and are not spelled out in this text. The manuals can be obtained from the equipment file in the main office.
- Collection begins at a shallow riffle or other physical barrier at the downstream limit of the reach, and terminates at a similar barrier at the upstream end of the reach.

- In general, fish collection procedures commence at the downstream barrier and proceeds in an upstream direction; however, this is up to the discretion of the Crew Leader.
- A minimum of two people is required for electrofishing.
- The forward electrode should be gradually passed back and forth over the stream width, including brush piles and root wads. As fish are stunned, they will usually roll over and become more visible, allowing the netter(s) to see and capture them.
- In very dense brush or root cover, fish often sense the presence of the team before they are close enough to be stunned and then retreat so deeply into cover that it is impossible to net them when they are stunned. It is often better in situations such as these to insert the electrode into the brush before it is turned on, give the fish a minute or so to get used to the new situation and then turn the current on. Many fish will be much closer to the edge of brush pile when they are stunned in this manner.

Sample Handling & Preservation

- Fish collected by seining and electroshocking should be kept in separate jars and labeled as to what method was used to capture them. This will make the methods independent if desired for analysis.
- Label each jug. Using a permanent marker, write the date, WBID #, collection time, stream name, number of jars composing one sample, county and legal location on the lid and side of the jug.. In general all fish should be placed in 10% formalin immediately after capture. There are a few exceptions made for larger fish (>100 gms or 0.25 lbs), which can be positively identified in the field.
    a. If all team members agree on the identification of such a fish, it can be returned to the water far enough away that recapture is unlikely.
    b. All large fish released must be documented on the **Fish Collection Sheet**. This includes fish such as gars, all types of carpsuckers, black bass, any white bass in water where yellow bass or striped/white hybrids may be found, all buffalo, all redhorse, and any other unusual fish. Please note**,** the <u>golden and black redhorse cannot be told apart without counting lateral line scales and pelvic rays</u>. Unless this information is recorded on the **Fish Collection Sheet**, the fish must be brought in for identification, or recorded as *Moxostoma* sp. Similar notes must be taken when releasing other fish that can be difficult to tell apart in the field such as the river and shorthead redhorses or any of the buffalos.
    c. All large fish released must be photographed on print film. It is important to take photos and label them so that they will be identifiable 5 to 7 years from now. The photos are data, and should be labeled as to the ID of the fish in the picture, the date, WBID #, site time, stream name, county, and legal location of the site. One copy should be kept in the Crew Leader's files, and one should be forwarded to the Data Manager.
- When preserving fish much larger than 0.3 to 5 kg (0.5 to 10 lbs), the fish should be sliced open along the lower rib in order to allow the formalin to penetrate the body cavity fast enough to prevent decay. A slit through the ribs is preferred to a belly slit to facilitate counting belly scales in the lab.
- Formalin is a carcinogen and can also cause permanent damage to mucous membranes and eyes. Care must be taken when placing fish in formalin so that the fish does not flop around and splash formalin onto people near the jar. The fish should be put into the jar with the lid tilted open away from the operator so that the lid shields the face and body of the operator. Flood any skin exposed to formalin with plenty of water as soon as possible. If it gets in your eyes, flood the eyes with water immediately and go to the doctor immediately after that.
- Fill out a Chain of Custody Form.
- The Crew Leader is responsible for transferring the samples to the Fish Sample Custodian.

Data Management & Records Management

Field Notation

All measurements and observations made at each site should be recorded on the **Site Collection Sheet**; include all physical and chemical information including DO for runs, riffles, pool top and pool bottom—when available. A **Flow Meter Data Sheet** should also be filled out. Note all photos on the appropriate sheets. A **Fish Collection Sheet** must be completed as described below:

DATA SHEET HEADER INFORMATION:

- SITE NAME: Record the stream named from the USGS 7-1/2' map name. If a county map, soil map, or other map has a different name, the USGS 7-1/2' map takes precedence. If a stream is unnamed on the USGS map, but named on another map, use that name, but write the name of the map in parentheses beside the stream name.
- WBID #: Record the Water Body Identification number.
- LEAD INVESTIGATOR: Record the name of the person responsible for data custody and reporting

- DATE: Record the site data in MM/DD/YR format.
- TIME: Record the site time in military format. The "site time" is when initial activities began at the site. The site time should be the same on all forms associated with this site.

COLLECTION INFORMATION:

For each collection method used, fill in the appropriate specifications. For the backpack, tote barge, and boat-mounted shockers, indicate:

- SHOCKING TIME — Record the amount of time spent shocking in seconds
- VOLT/AMPS — Record the voltage and amperage on the shocker
- PULSES/SECOND — Record the pulses per second setting on the shocker (measure of wave frequency)
- %DUTY CYCLE — % of on time; product of pulse width and frequency (the actual time the current is being delivered)
- REACH LENGTH — Length of stream used in the fish collection.

For the boat-mounted shocker only, also indicate:

- LOW RANGE or HIGH RANGE
- HANDHELD or UMBRELLA ARRAY PROBE.

If a seine is used, indicate:

- SEINING TIME — Record the amount of time spent seining in minutes
- SEINE TYPE/SIZE — Record the size and type of seines used

FISH IDENTIFIED & RELEASED:

- SPECIES — Record the genus and species of the fish released or the common name if the species can be definitely identified later based on that common name
- COUNT — Record the number of individual organisms released
  - SHOCK — number released during the shocking effort
  - SEINE — number released during the seining effort
- COMMENTS — Record any information that was used to help in the identification process
- PHOTO ID # — Record the identification number that corresponds to OCCWQ photo tracking system. It is mandatory to follow the procedure outlined in **Photodocumentation SOP.**

Habitat Form

At all sites where fish are collected, a stream habitat evaluation must be performed. It does not have to be done on the same day as the fish are collected, but should be done before major floods change the habitat. Refer to the **Habitat Assessment SOP**.

Chain of Custody Procedure

Collection of fish requires the use of a Chain of Custody form (COC). The handling of the COC should follow the procedures described in the **Chain of Custody and Sample Labeling SOP**. The manifest is routed as follows:

- Fish samples are collected in the field and the COC is completed and signed by the field personnel involved with collection.
- Samples are submitted to the Fish Data Custodian and the person receiving the samples signs the COC.
- Processed samples are sent to the taxonomist for identification. The taxonomist must sign the COC.
- After identification, taxonomic identification sheets will be forwarded with a copy of the signed COC to the Data Manager. The COC form returned from the laboratory will include the laboratory tracking or log numbers used to reference the identification sheet.

OKLAHOMA CONSERVATION COMMISSION
WATER QUALITY DIVISION

STANDARD OPERATING PROCEDURE

FLOW MEASUREMENT (METER METHOD)

(Marsh-McBirney Flo-Mate 2000 & Ott MF Pro)

1.0 PROCEDURAL SECTION

1.1 Scope and Application[9]

The flow meter measures water velocity in terms of distance traveled per unit time (e.g. ft/s). Determining velocity is necessary to calculate discharge (flow), which is the measure of the volume of water per unit time. Flow can be measured by a variety of techniques, but for consistency and accuracy purposes, flow will be ideally measured using the Marsh-McBirney Model 2000 Flo-Mate or the Ott MF Pro.

1.2 Summary of Method[1]

The flow meter measures velocity using the Faraday Principle: as a conductor moves through and cuts the lines of magnetic flux, a voltage is produced. The magnitude of the generated voltage is directly proportional to the velocity at which the conductor moves through the magnetic field. The flow meter measures velocity in one direction from an electromagnetic sensor placed in a conductive liquid such as water. In other words, the flow meter measures velocity through changes in the magnetic field about the sensor as caused by the flow of water. The velocity measurement is displayed digitally as distance/unit time.

1.2.1 Definitions

Flow = volume/time
rC: time constant filtering mode
FPA: fixed point averaging mode

1.3 Health and Safety Warnings

Flow should not be measured by wading in the stream if the velocity is high or the stage is deep. Wearing waders can be dangerous in the event they fill with water. Also, common sense should prevail when measuring flow by oneself.

1.4 Cautions

- The case that holds the electronics and the sensor bulb are susceptible to jolting and rough handling. Treat with care.
- The electrode must be kept free from nonconductive coating such as oil and grease.
- To prevent damage, do not over tighten the thumbscrew on the sensor.

1.5 Interference

- Nonconductive compounds, such as oil and grease, will interfere with the function of the unit. Make sure the electrode is clean prior to and during use. Wash with soap and water as needed.
- Water moving less than the instrument detection method (0.05 ft/sec)

1.6 Personnel Qualification

Field personal must be trained and evaluated on use of equipment prior to collecting samples or data. Use of the equipment is subject to approval by the QA Officer and/or the Monitoring Coordinator. Training will be done through dry run exercises in the laboratory and field to familiarize field personnel with operation/collection, calibration and maintenance. Investigators must be familiar with the SOP documents and owner's manual, when applicable.

1.7 Apparatus & Materials

- Marsh-McBirney Flo-Mate Model 2000 or Ott MF Pro
- Operator should always have a spare set of batteries.

1.8 Instrument/Method Calibration[1]

Refer to Figure 1 for a description of the key pad functions of the Flo-Mate.
Refer to Figure 2 for a description of the key pad functions of the Ott MF Pro.

<u>Before each sampling trip</u>, the meter should be checked to see if it is reading 0.0 under zero discharge ("Zero Check").

For the Flo-mate: First clean sensor with soap and water. Place sensor (attached to wading rod for stability) in a five-gallon bucket as near center as possible and at least three inches from any side or bottom. Wait ten minutes to insure that the water is absolutely still before starting measurement. Follow the directions listed below.

[9] Text taken directly or in part from Marsh-McBirney, Flo-Mate 2000 Instruction Manual, December 1994

1.8.1 Flo- Mate Meter Calibration:

1. Turn on the meter by pressing **ON/C** button.
2. Use a filter value of 15 seconds.
3. Press the **STO** and **RCL** keys at the same time and a **3** will appear on the display.
4. Reduce this figure to zero with the down arrow key "▼". (You must press the arrow key within five seconds of the time that the **3** is displayed or you will get an error message "**ERR 3**". If this occurs, press the **OFF** key and start over.)
5. After you have reduced the value to zero, a **32** will be displayed.
6. The unit will automatically drop to zero, at which time the meter is zeroed. (Zero stability is ±0.05 ft/sec.)

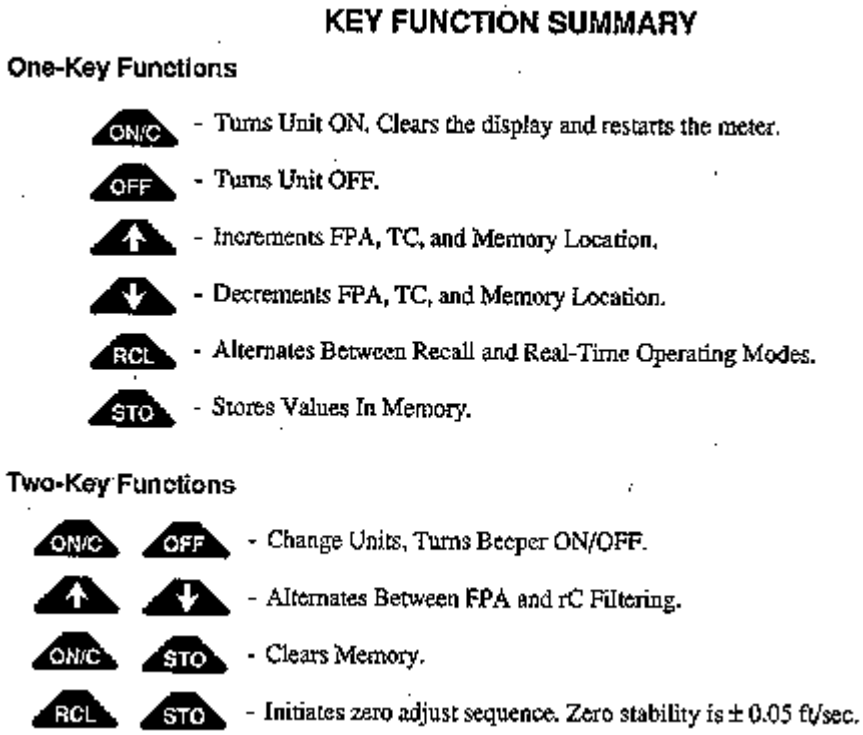

Figure 1: Key function summary (Marsh-McBirney, 1994)

1.8.2 Ott MF Pro Meter Calibration:

1. First clean the sensor with soap and water.
2. Set the “auto depth zero” to On. This allows the instrument to automatically do an air calibration when the sensor is removed from water and is in the air.
3. The user can also manually zero the sensor. Refer to page 15 of the user manual for this procedure.

Key Description:

1 Power On/Off	**6** Main Menu
2 OK	**7** Underscore or decimal
3 Up and Down arrows	**8** Backspace
4 Quick Jump	**9** Alpha-numeric
5 Right and Left arrows	**10** Previous menu

Power On/Off - Energizes and de-energizes the meter.
OK - Confirms an entry or highlighted menu option.
Up and Down arrows - Moves up or down in the display. If the cursor is at the top or bottom of the display, the cursor wraps to the bottom or top when the UP or DOWN arrow is pushed.
Quick Jump - In normal operation, this key jumps to the Select conduit shape screen. If the auto-zero feature is disabled, hold this key for five seconds to do a manual zero of the depth sensor. In Real-Time mode, the Quick Jump key toggles between the digital and graph views.
Right and Left arrows - Moves to the right or left in the display.
Main Menu - Moves to the Main Menu from any submenu or screen.
Underscore or decimal - Puts in an underscore or decimal character. In numeric-only fields, this key automatically puts a decimal point in the cursor position.
Backspace - Moves the cursor back one space.
Alpha-numeric - Puts in the key alpha or numeric value. Values are put in the order shown on the key. After 2 seconds, the value shown in the display is stored and the cursor advances.
Previous menu - Moves to the previous screen.

Figure 2: Key function summary (Ott MF Pro)

1.9 Equipment Operation & Preparation [1]

1.9.1 Meter Set-up

1.9.1a Batteries

The Flo-Mate operates on 2 D batteries for 25 – 30 hours (alkaline battery). Before going to the field, check for low battery flag "**LOW BAT**". The length of time the batteries will last after the flag appears can vary from 15 minutes to 1 hour, depending on temperature and battery type. The unit will shut down when the voltage drops too low.
The Ott MF Pro has to be charged with a wall charger. Check the battery life status bar on the main screen to determine level of charge.

1.9.1b Sensor Mounting

The sensor can be attached to different size poles with the universal sensor mount (see owner's manual). When a standard wading rod is used, a "double-ended hanger" is attached. Mounting instructions are as follows:

1. Insert the mounting shaft on the universal mount into the hole at the back of the sensor.
2. Seat the thumbscrew in the groove on the shaft.
3. Hand tighten the thumbscrew. **DO NOT OVER-TIGHTEN**. (The sensor does not need to be tightly attached, excessive force on the thumbscrew could damage the sensor. Also, since the sensor should be removed during transport, it will be put on and taken off frequently.)

1.9.1c Wading Rod

Both metric and English standard wading rods are available. For the OCC activities, the measurements will be made using a rod with increments marked in feet. The wading rod is a top adjusting model, which makes it much easier to use. To move the rod up or down, press the small rubber mount at the top of the rod handle and slide the smaller of the two rods up or down.

Two accepted methods for determining velocities are as follows:

- Measure the velocity at 60% of the depth (from the top) and use this as the mean
- Measure the velocity at 20% and 80% of the depth (from the top). Use the average of these velocities as the mean.

The purpose of the top setting wading rod is to conveniently set the sensor at 20%, 60%, or 80% of the total depth. The total depth can be measured using the gauge rod. The rod is divided into feet and tenths of feet (not inches). Each single mark represents 0.10 ft, each double mark represents 0.50 ft, and each triple mark represents 1.00 ft.

The wading rod is designed to facilitate the determination of the correct sensor depth as shown in the following examples (Refer to Figure2):

To calculate 60% of depth from the top:

1. Determine depth of segment to be measured using the gradations on the wading rod (e.g. 2.7 ft).
2. Slide smaller rod up until the "2" on the rod lines up with the "7" on the rod handle.

To calculate 80% of depth from the top:

1. Determine depth of segment to be measured (e.g. 2.7 feet).
2. Divide depth by 2 = 1.35.
3. Slide small rod until "1" on the rod lines up with the 3.5 on the rod handle.

To calculate 20% of the depth from the top:

4. Determine depth of segment to be measured (e.g. 2.7 feet).
5. Multiply depth by 2 = 5.4 feet.
6. Slide small rod until "5" on the rod lines up with the 4 on the rod handle.

Using the 60% method by itself to determine velocity is probably the least accurate option because it assumes that there is consistent flow throughout the depth profile. However, in shallow waters, this is an acceptable method

because it may not be practical to measure velocity at other depths. Therefore, for OCC purposes, the selection of the method depends on the depth of the water column.

1. If the depth is less than 1.5 feet, the velocity should be measured at 60% of the profile from the surface.
2. If the depth is greater than or equal to 1.5 feet, the velocity should be measured at 20% and 80% of the profile from the surface and averaged.

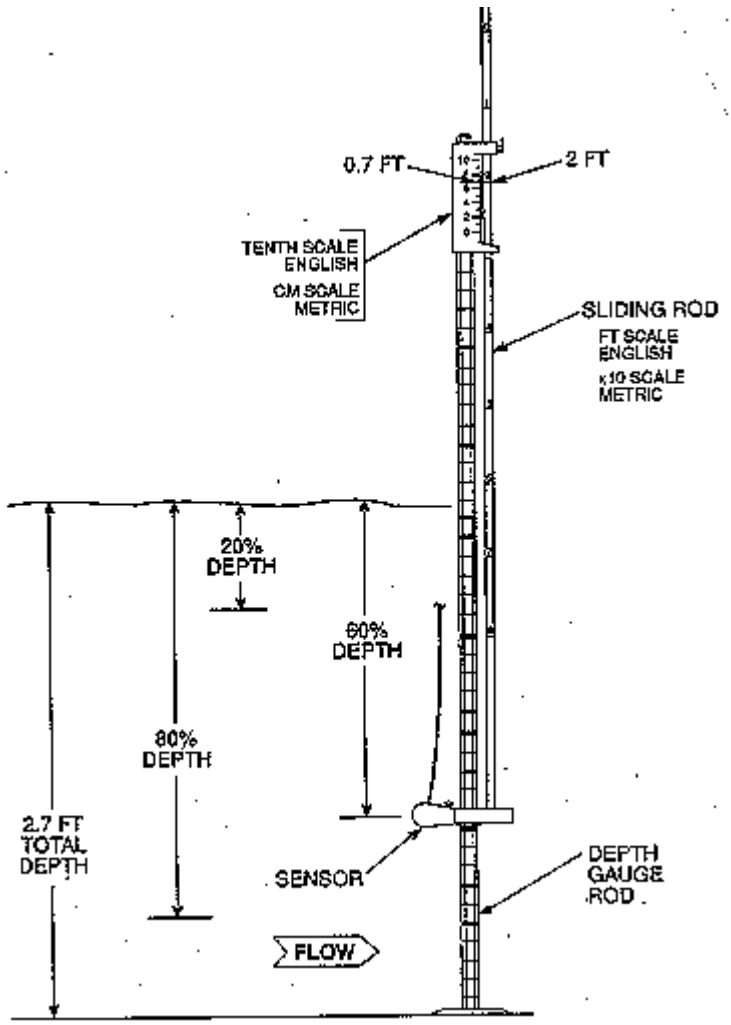

Figure 2: Top setting wading rod. The position of the rod and the depth corresponds to the examples presented above.

1.10 Sample Collection

1.10.1 Meter Setting

Obtaining accurate flow measurements is more a function of physical technique rather than instrument operation. The physical situation at each stream will be unique; therefore, it is not possible to describe what to do under every set of circumstances. The following instructions are presented as guidelines but you will have to exercise considerable judgment in the field to obtain good results.

The flow around a sensor is not stable and will jump around a bit. In order to dampen this tendency either meter can be adjusted to either filter the reading (time constant filtering - rC) or average the reading (fixed point averaging - FPA).

By filtering the reading, the meter only reads every so many seconds, as specified by the user. The other setting averages the signal over some period, as specified by the user. Either method can be used; however, for the greatest accuracy, the averaged reading method is best. Refer to the user manual for setting the meter to FPA. Make sure that the meter display units are feet, not meters.

1.10.2 Site Selection and Preparation

The portion of the stream where flow is to be measured should be as uniform as possible. The ideal shape is a rectangle, which can be found under some cement bridges. Avoid stagnant areas or those with irregular bottoms, obvious turbulence (e.g., riffles), standing waves, or strongly sloping bottoms. For small streams, the narrowest portions are generally best as velocities will be higher and fewer measurements will be required.

The stream should be divided into a number of segments. The more segments, the more accurate the results. Divide the stream so that each segment accounts for 5% of the wetted stream width. Using this method, if one measure is inaccurate it will not significantly affect the overall result. In any case, an attempt should be made to measure flow at least every foot when the width is ~20 feet with a minimum of twenty measurements. If the stream is extremely narrow, the flow should not be measured at increments less than 0.5 feet.

In many streams, the first foot or so of stream is very shallow and stagnant. There are two approaches to dealing with this problem. The first is to ignore the shallow portion while the second involves averaging the depth and velocity between the bank and the first sample point. The best approach is to take the first measurement at the closest point where depth and flow are adequate. Any stream area closer to the shore than one-half the segment width from this point is ignored.

1.10.3 Measurement Procedure

1. Turn meter on.
2. Set to **FPA** mode with a 15 second averaging period. Make sure that the meter units are in feet, not meters.
3. Stretch a graduated string or tape from bank to bank on the stream cross section to be sampled.
4. Divide the distance into equal segments so that each segment account for 5% of the stream.
5. Place the wading rod at the first interval with the sensor pointed upstream directly into the current. Stand behind and to the side of the wading rod.
6. Measure depth.
7. Adjust wading height based on water depth. (<1.5 ft take reading at 60% of depth; >1.5 ft take readings at 20% and 80% of depth).
8. Hold the rod steady while the reading is being measured. Once the reading has stabilized or averaged, record the value on the flow data sheet (see instructions below), or store the reading for later transcription.

1.11 Sample Handling & Preservation

Not applicable

1.12 Sample Preparation and Analysis

Not applicable

1.13 Troubleshooting

See owner's manuals for the various error codes

1.14 Data Acquisition, Calculation & Data Reduction

Not applicable

1.15 Computer Hardware & Software

Not applicable

1.16 Data Management & Records Management

1.16.1 Field Notation

All velocity measurements made at each site should be recorded on the **Site Collection Sheet** (see **SOP Appendix: Data Sheets**). Data should be recorded following procedures outlined in the Procedures for Completing **Field Data Sheets SOP**. In addition, a **Flow Meter Data Sheet** (see **SOP Appendix: Data Sheets**) must be filled out for each site when the Flo-Mate is used.

1.16.2 Instructions for completing Flow Meter Data Sheet

The following bullets will describe how the sheet should be filled out when the Flo-Mate is used:

DATA SHEET HEADER INFORMATION:

- SITE NAME: Record the stream named from the USGS 7-1/2' map name. If a county map, soil map, or other map has a different name, the USGS 7-1/2' map takes precedence. If a stream is unnamed on the USGS map, but named on another map, use that name, but write the name of the reference map in parentheses beside the stream name.
- WBID #: Waterbody identification number.
- LEAD INVESTIGATOR: The person in charge of data handling and custody.
- DATE: Record the site date in MM/DD/YR format.
- TIME: Record the site time in military format. The "site time" is when initial activities began at the site.

FIELD INFORMATION:

- DIST FROM START: "Distance From the Starting Point". Record the distance point from the edge of the stream. In the first row, mark EOS (Edge of Stream). In the subsequent rows, record the distance in feet between each measurement point. The final reading should be EOS.
- WIDTH: Record the width of the segment measured in feet. In the first row, mark "0" Record the unit of measure between each measurement point.
- TOT DEPTH: "Total Depth" Record the total depth for the point of measurement in feet.
- VELOCITY: Record the velocity as measured by the flow meter.
- AVE VEL: "Average Velocity" is calculated by the database—no need to record anything in this space. Average velocity is determined when the flow measurement was made at more than one observed depth.
- AREA DIS: "Area Discharge" is calculated by the database—no need to record anything in this space. The area of the segment measured is calculated based on the depth, and distance.
- DISCHARGE: Discharge is calculated by the database—no need to record anything in this space. This cell refers to the discharge of the specific segment where the velocity was measured.
- GAUGE HEIGHT: At some sites, staff gauges have been installed. Record the gauge height, if applicable. During high flow events, when velocity readings cannot be taken safely, record the staff gauge height on the **Site Collection Sheet**. There is no need to turn in a Flow Meter Data Sheet.
- CREST HEIGHT: If applicable, the peak staff gauge height will be taken based on the measurement of a crest gauge. This information should be recorded as often as required in the QAPP or as instructed by the Monitoring Coordinator.

1.16.2 Chain of Custody Procedure

Not applicable

2.0 QA/QC SECTION

2.1 Training

Training of field personnel will be done through dry run exercises in the laboratory to familiarize them with instrument operation, calibration, and maintenance. All operators are required to become familiar with the SOP document and owner's manual. Prior to solo sample collection, field personnel are evaluated in a field setting for proper use of equipment and sample collection protocol. Annual field audits are performed on sample collectors following procedures outlined in the Quality Management Plan.

2.2 Maintenance

- Unit is waterproof, but do not submerge it.
- Clean outside of unit with a moist cloth.
- Clean sensor with soap and water when noisy reading are observed. Do not use hydrocarbon solvents.
- Protect the unit and sensor from excessive jostling; it should travel in the cab of the vehicle.

2.3 QC Procedures

The meter should be zeroed prior to each sampling episode.

3.0 REFERENCES

Marsh-McBirney, (1994), "Installation and Operations Manual, Model 200" Fredrick Maryland.

Ott Hydromet (2014), "MF Pro Basic User Manual".

4.0 APPENDIX A

STANDARD OPERATING PROCEDURE
Field Summary

Flow Measurement

INSTRUMENT CALIBRATION
The Marsh-McBirney Model 2000 Flo-Mate & the Ott MF Pro should be zeroed prior to each sampling episode.
For the Flo-Mate:

1. Turn on the meter by pressing **ON/C** button.
2. Use a filter value of 15 seconds.
3. Press the **STO** and **RCL** keys at the same time and a **3** will appear on the display.
4. Reduce this figure to zero with the down arrow key "▼". (You must press the arrow key within five seconds of the time that the **3** is displayed or you will get an error message "**ERR 3**". If this occurs, press the **OFF** key & start over.)
5. After you have reduced the value to zero, a **32** will be displayed.
6. The unit will automatically drop to zero, at which time the meter is zeroed. (Zero stability is ±0.05 ft/sec.)

For the Ott MF Pro:

1. Turn the meter on using the POWER button.
2. Make sure that the "Auto Zero Depth" is on. This ensures that when the sensor is removed from water and is in the air it will automatically do a zero calibration.

EQUIPMENT OPERATION & PREPARATION

Batteries
The Flo-Mate operates on 2 D batteries for 25 – 30 hours (alkaline battery). The Ott MF Pro must be charged via wall charger.

Sensor Mounting

1. Insert the mounting shaft on the universal mount into the hole at the back of the sensor.
2. Seat the thumbscrew in the groove on the shaft.
3. Hand tighten the thumbscrew. **DO NOT OVER-TIGHTEN**. (The sensor does not need to be tightly attached; excessive force on the thumbscrew could damage the sensor. Also, since the sensor should be removed during transport, it will be put on and taken off frequently.)

Wading Rod
For the OCC activities, the measurements will be made using a rod with increments marked in feet. The wading rod is a top adjusting model, which makes it much easier to use. To move the rod up or down, press the small rubber mount at the top of the rod handle and slide the smaller of the two rods up or down.

The purpose of the top setting wading rod is to conveniently set the sensor at 20%, 60%, or 80% of the total depth. The total depth can be measured using the gauge rod. The rod is divided into feet and tenths of feet (not inches). Each single mark represents 0.10 ft, each double mark represents 0.50 ft, and each triple mark represents 1.00 ft.

Two <u>OCC accepted</u> methods for determining velocities are as follows:

- Depth < 1.5 ft: Measure the velocity at 60% of the depth (from the top) and use this as the mean.
- Depth ≥ 1.5 ft: Measure the velocity at 20% and 80% of the depth (from the top). Use the average of these velocities as the mean.

60% of depth from the top:

- Determine depth of segment to be measured using the gradations on the wading rod (e.g. 2.7 ft).
- Slide smaller rod up until the "2" on the rod lines up with the "7" on the rod handle.

80% of depth from the top:

- Determine depth of segment to be measured (e.g. 2.7 feet).
- Divide depth by 2 = 1.35.
- Slide small rod until "1" on the rod lines up with the 3.5 on the rod handle.

20% of the depth from the top:

- Determine depth of segment to be measured (e.g. 2.7 feet).
- Multiply depth by 2 = 5.4 feet.
- Slide small rod until "5" on the rod lines up with the 4 on the rod handle.

MEASUREMENT PROCEDURE

1. Turn meter on.
2. Set to **FPA** mode with a 15 second averaging period. Make sure the meter units are in feet, not meters.
3. Stretch a graduated string from bank to bank on the stream cross section to be sampled.
4. Divide the distance into equal segments so that each segment account for 5% of the stream.
5. Place the wading rod at the first interval with sensor pointed upstream directly into the current. Stand behind and to the side of the wading rod.
6. Measure depth.
7. Adjust wading height based on water depth. (<1.5 ft take reading at 60% of depth; >1.5 ft take readings at 20% and 80% of depth).
8. Hold the rod steady while the reading is being measured.
9. Once the reading has stabilized or averaged, record the value on the flow data sheet (see instructions below), or store the reading for later transcription.

INSTRUCTIONS FOR COMPLETING FLOW DATA SHEET (For use with Flo-Mate only)**:**

DATA SHEET HEADER INFORMATION:

- SITE NAME: Record the stream named from the USGS 7-1/2' map name. If a county map, soil map, or other map has a different name, the USGS 7-1/2' map takes precedence. If a stream is unnamed on the USGS map, but named on another map, use that name, but write the name of the reference map in parentheses beside the stream name.
- WBID #: Waterbody identification number.
- LEAD INVESTIGATOR: The person in charge of data handling and custody.
- DATE: Record the site date in MM/DD/YR format.
- TIME: Record the site time in military format. The “site time” is when initial activities began at the site.

FIELD INFORMATION:

- DIST FROM START: “Distance From the Starting Point”. Record the distance point from the edge of the stream. In the first row, mark EOS (Edge of Stream). In the subsequent rows, record the distance in feet between each measurement point. The final reading should be EOS.
- WIDTH: Record the width of the segment measured in feet. In the first row, mark “0” Record the unit of measure between each measurement point.
- TOT DEPTH: “Total Depth” Record the total depth for the point of measurement in feet.
- VELOCITY: Record the velocity as measured by the flow meter
- AVE VEL: “Average Velocity” is calculated by the database—no need to record anything in this space. Average velocity is determined when the flow measurement was made at more than one observed depth.
- AREA DIS: “Area Discharge” is calculated by the database—no need to record anything in this space. The area of the segment measured is calculated based on the depth, and distance.
- DISCHARGE: Discharge is calculated by the database—no need to record anything in this space. This cell refers to the discharge of the specific segment where the velocity was measured.
- GAUGE HEIGHT: At some sites, staff gauges have been installed. Record the gauge height, if applicable. During high flow events, when velocity readings cannot be taken safely, record the staff gauge height on the **Site Collection Sheet**. There is no need to turn in a Flow Meter Data Sheet.
- CREST HEIGHT: If applicable, the peak staff gauge height will be taken based on the measurement of a crest gauge. This information should be recorded as often as required in the QAPP or as instructed by the Monitoring Coordinator.

MAINTENANCE

- Unit is waterproof, but do not submerge it.
- Clean outside of unit with a moist cloth.
- Clean sensor with soap and water when noisy reading are observed. Do not use hydrocarbon solvents.
- Protect the unit and sensor from excessive jostling; it should travel in the cab of the vehicle.

OKLAHOMA CONSERVATION COMMISSION
WATER QUALITY DIVISION

STANDARD OPERATING PROCEDURE

HABITAT ASSESSMENT

1.0 PROCEDURAL SECTION

1.1 Scope and Application[10,11]

An evaluation of habitat quality is critical to any assessment of ecological integrity. For OCC purposes "habitat assessment" measures the quality of the in stream and riparian zone habitat that influences the structure and function of the lotic aquatic community. Habitat directly influences the biotic community and can be used to discern the source of impairment. The habitat parameters evaluated during this process are related to the overall aquatic life use and are potential sources of limitations to the aquatic biota. Habitat, as structured by in-stream and surrounding topographical features, is a major determinant of the aquatic community potential. Both the quality and quantity of available habitat affect the structure and composition of resident biological communities.

1.2 Summary of Method

The habitat assessment procedure follows a modified version of the EPA Rapid Bioassessment Protocol V (EPA 1999) supplemented by other documents. The habitat assessment was designed to assess the physical habitat available to support the biological community. The assessment is based on particular parameters grouped into three principal categories. The first group represents parameters on the microscale habitat, for example bottom substrate, cover, and flow. The second group of parameters is designed to assess the macroscale habitat such as channel morphology, sediment deposition, and sinuosity. The third grouping evaluates the riparian and bank structure; for example, bank stability, vegetation, and streamside cover. A quantitative value or weight is assigned to each parameter so that biologically significant factors can be emphasized. These weighting values are then adjusted based on the quality of the parameter. Scores are then assigned as an evaluation of in-stream and riparian conditions. Habitat assessments are conducted on a 400 meter reach of stream. Measurements/scoring for each parameter are made on 20 meter intervals.

1.2.1 Definitions

Left Bank The bank of the stream that is on the left while facing **downstream**.

1.3 Health and Safety Warnings

- Primary responsibility for safety rests with the team leader.
- General safety guidelines should be observed. Discontinue any activity in streams during thunderstorms or heavy rain.

1.4 Cautions

- Record all measurements in meters

1.5 Interference

None

1.6 Personnel Qualification

Field personal must be trained and evaluated on assessment techniques. Habitat assessment evaluation is subject to approval by the QA Officer and/or the Environmental Monitoring Coordinator. Training will be done through dry run and supervised exercises in the field to familiarize field personnel with procedures and techniques.

1.7 Apparatus & Materials

- field data sheets
- clip board
- wading rod (graduated in 0.1 m units)
- hip chain and/or range finder
- GPS unit

1.8 Instrument/Method Calibration

None

---

[10] Text taken directly or in part from "Rapid Bioassessment Protocols for Use in Wadeable Stream and Rivers, 2nd Edition", US EPA 841-B-99-002 July 1999

[11] Text taken directly or in part from Dan Butler, Senior Biologist, Oklahoma Conservation Commission (2000)

1.9 Preparation

- A representative stream reach is selected and measured such that primary physical features are included in the reach (riffles, runs, and pools).
- The reach should be located away from the influences of major tributaries.

1.10 Sample Collection

The stream habitat assessments follows a modified version of the EPA Rapid Bioassessment Protocol V (EPA 1999) supplemented by other documents. The habitat assessment was designed to assess the physical habitat available to support a biological community. The assessment is based on particular parameters as they are observed in the field. A quantitative value or weight is recorded for each parameter at set intervals along the stream segment. The information is weighted and complied to generate an overall score.

Interpretation of the assessment parameters in the field can be somewhat subjective; thus it is imperative that the field technician be properly trained in quantitative evaluation. The following paragraphs describe the items of importance, but this information is meaningless without prior instruction.

The **Stream Habitat Assessment Sheet** is divided into 17 general columns some of which are further subdivided. In total, there are 47 cells, for a given distance of stream reach, that require data input. The following paragraphs will explain each grouping and subgrouping as presented on the field data sheet.

Instructions for filling out the Stream Habitat Assessment Sheet

SITE INFORMATION:

- SITE NAME: Record the stream named from the USGS 7-1/2' map name. If a county map, soil map, or other map has a different name, the USGS 7-1/2' map takes precedence. If a stream is unnamed on the USGS map, but named on another map, use that name, but write the name of the map in parentheses beside the stream name.
- WBID #: Record the Water Body Identification number.
- SITE DATE: Record the site data in MM/DD/YR format
- START POINT: Provide a GPS lat/long and a brief written description of the starting point (first observation), including obvious features such as bridges.
- SITE TIME: Record the site time in military format. The “site time” is when initial activities began at the site.
- END POINT: Provide a GPS lat/long and a brief written description of the ending point (last observation).
- SINUOSITY: Stream length/valley length. This should be assessed using the lat/long information from the start and end points, but can be assessed from aerial photographs. USGS topographic maps should not be used.
- INVESTIGATORS: All people involved with the sampling should be recorded; the “crew leader” (the person responsible for data custody and reporting) should be circled on the form.
- DIRECTION: Record if the assessment was done upstream or downstream from the starting point.

Distance (DIST)

In general, each stream reach is sampled for a distance of 400 meters. Under most circumstances the 400 meter reach is divided into twenty-20 meter segments. In larger streams a reach longer than 400m may need to be sampled, due to the availability of habitat types. If possible the reach should be extended to include a run, riffle and pool. Any causes of deviation from a 400m reach should be documented. Depending on the QAPP, the measurement interval can be lengthened or shortened.

If using a rangefinder, select an easily visible landmark such as a large tree or rock to aim for. If the stream bends before a full reading can be made, measure the distance to the bend and then measure the remaining distance after going around the bend.

If using a hip chain, attach the string to a fixed object at the starting point and start measuring the distance while moving along the reach. Make sure to attach string to a branch or rock along bends to accurately measure the stream distance.

Depth

The column "DEPTH" is divided into 3 subcolumns (L1/4, C, R1/4). In general, the depth of water is measured in meters to the nearest 0.1 m. The stream is divided into 3 segments: left ¼, right ¼, and center. The left water's edge of the stream is on left hand side while looking downstream.

- The left 1/4 (**L1/4**) is the depth of water midway between the center of the stream and the left water's edge.
- Center (**C**)
- Right 1/4 (**R1/4**) is the depth of water midway between the center of the stream and the right water's edge.

If the stream consists of one wide channel and one narrower channel separated by an island, take two evenly spaced depth measurements in the wide channel and one in the center of the narrow channel.

Width

The column "WIDTH" is divided into 2 subcolumns (WTR and BNK). The width measurement takes into account the width of the wetted surface or water, and the width of the lower bank to the nearest 1 m.

- The width of the water (**WTR**) refers to the water's edge to water's edge, or a perpendicular section across the wetted surface. If there are vegetated "island" areas in the stream, subtract out these areas from the wetted width and make note of this.
- The width of the bank (**BNK**) refers to the distance between the tops of the left and right lower banks. The top of the lower bank is the normal high water line, which is usually marked by the beginning of well-established perennial vegetation. Below this line will be gravel and bare soil. There may be a sparse covering of annual vegetation below this line.

Substrate

The "SUBSTRATE" column is divided into 8 subcategories (Si&C, SND, GVL, CBL, BLD, BRK, POM, and HPC). The substrate measurement characterizes the physical benthic material. Substrate is evaluated from the water's edge on one side to the water's edge on the other side of the stream at the transect. The substrate is characterized based on component categories: silt and clay, sand, gravel, cobble, boulder, bedrock, particulate organic matter and/or hardpan clay. Record the fraction of each category as a percent of total. The total of all substrate components should add up to 100 percent. The categories include the following:

- **Si&C** Loose silt and clay (not gritty between the fingers)
- **SND** Sand or rock particles smaller than ladybug size (gritty between the fingers); 0.1 to 2mm median diameter.
- **GVL** Gravel rocks ladybug to tennis ball size; rocks from 2 mm to 50 mm median diameter.
- **CBL** Cobble rocks tennis ball to basketball size; rocks from 50 mm to 250 mm median diameter.
- **BLD** Boulder rocks basketball to car size; rocks > 250mm median diameter.
- **BRK** Bedrock; rock area greater than a car in size
- **POM** Particulate organic matter; rotten leaves and fragments of stick and logs.
- **HPC** Hardpan clay; firm, consolidated fine substrate.

Habitat Type

The HABITAT TYPE column is subdivided into 4 additional columns (RIF, PL, RUN, or DRY). Check the cell that is most applicable to the habitat type present at the transect. If there are two obvious habitat types at the cross section being measured, check both boxes. An example is when a backwater pool is encountered beside a run or riffle.

- A riffle (**RIF**) is defined as any sudden downward change in the level of the streambed such that the surface of the water become disrupted by small waves and usually makes a sound.
- A pool (**PL**) has a smooth surface with no or very little current and can be deep or shallow.
- A run (**RU**) has an obvious current, may be deep or shallow and often has a surface that may be slightly broken, but does not make any noise.
- Check dry (**DR**) if the stream has no water in it at the point being measured.

In-Stream Cover % Area

The IN-STREAM COVER % AREA column is divided into 9 subcolumns (UCB, LWD, SWD, RTS, BRL, SAV, EAV, TV, and CB&G). This category attempts to quantify the amount of cover present for fish in the section of stream you walked from the previous station to the present one. For example, if the section was 20 meters long and averaged 6 meters wide, its area would be 120 m^2. A submerged log about 3 m long by 0.5 m wide would offer 1.5 m^2 cover, and you would note that the LWD (large

woody debris) category offered 1.5/120 or 1.3 percent cover. Water willow, an emergent aquatic macrophyte, might be growing in shallow water along the edge of the stream. If both edges had a zone about 1 meter wide where it grows, there would be (1 meter) (20 meters) (2 sides)=40m^2 of emergent aquatic vegetation (EAV) in the 120m^2 section of stream and you would check 40/120 or 33 percent in the EAV column. **Note that the totals of the percent cover columns for each row will rarely add up to 100 percent and may often be 0 percent**. These columns may sum to a value greater than 100%.

The categories are:

- **UCB** Undercut Banks
- **LWD** Large Woody Debris—woody debris in the water > 10 cm. in diameter.
- **SWD** Small Woody Debris—woody debris in the water ≤ 10 cm. in diameter.
- **RTS** Roots—these are submerged root wads of trees. If single or occasional roots are encountered, count them in one of the woody debris categories.
- **BRL** Bedrock Ledges—underwater bedrock ledges not forming part of an undercut bank.
- **SAV** Submerged Aquatic Vegetation.
- **EAV** Emergent Aquatic Vegetation.
- **TV** Terrestrial vegetation that is currently underwater. An example would be tree branches or grass leaves that are actually hanging down into the stream.
- **CBG** Cobble, Boulder, and Gravel. This is an estimate of the percent coverage of cobble and boulder in the 20-meter section. It may not be the same number as the percent composition of cobble and boulder in the cross section where you estimated substrate since they represent different areas.

Percent Embeddedness[1] (EMB)

The degree to which boulders and cobble have been surrounded by fine sediment indicates suitability of the stream substrate as habitat. Embeddedness is evaluated by visual observation of the degree to which larger particles have been surrounded by sediment. This quantifies the amount of silt, clay, and sand that has been deposited in riffles. Percent embeddedness should be recorded when in a riffle. If there are no riffles within the 400m, then calculate embeddedness from a stable run. Record the percent embeddedness only at the transect.

If there is no fine material surrounding the cobble and gravel found in the riffles, and there is at least some free space under the rocks, that is 0 percent embedded. If the free space under the rocks is filled but the sides are untouched, count that as 5 percent embedded. As the level of fines rises up the cobble sides, estimate the percentage of the total height of the cobbles that is covered. This is the embeddedness estimate. An obvious "embeddedness line" is often distinctly observed on the side of a rock when it is removed from the water.

Percent Canopy Cover (CAN)

At each measuring station, estimate the percent canopy cover directly over the water in the previous segment. It can range from 0 to 100 percent, but if any "sky" is observed directly overhead, the estimate should be less than 100 percent.

Point Bar (Pt)

If a recently formed (unstable) point bar is present, that is, it has no or little vegetation, put a check in this box.

Deposition and Scouring (D+S)[1]

These parameters relate to the destruction of in-stream habitat. Characteristics to observe are scoured substrate and degree of siltation in pools and riffles. If there is evidence of scouring (smooth, clean bedrock or hardpan play) or deposition (loose, shifting bottoms of fine sand or silt or filled in pools) in the previous segment surveyed, check this box.

Percent Bank Vegetative Cover (BV)

Record an estimate of the percent of total area for each bank (left and right) separately over the entire 20 m reach that is protected from erosion by well-established, perennial vegetation. Soil does not have to be covered as long as it is stable.

Dominant Vegetation (DV)

Place an S (shrub), T (tree), or G (grasses and forbs) in the box indicating which type of vegetation is most dominant on each of the banks separately in terms of percent of ground protected over the entire 20 m reach. For our purposes, shrubs are any woody plant whose trunk and branches are <= 10 cm in diameter. If the vegetation is mixed but each of the three groups contribute at least 20% of the total put an M in the box.

Height of Bank (HT OF BANK)

Record the average height (in meters) for each bank (left and right separately) from the bottom of the lower bank to the top of the upper bank for the entire 20m reach. The bottom of the lower bank is indicated by the water line at base flow. The top of the upper bank is usually demarcated by the edge of the floodplain.

Average Height of the Eroding Banks (HT ERODED)

The "HT ERODED BK" column is divided into 2 subcolumns (LEFT and RIGHT). Record the average height of the eroding banks on either side of the stream segment for the entire 20 m reach. The height of the erosion is measured as the distance between the bottom of the active erosion and the top of the active erosion. Include any active erosion from the bottom of the lower bank to the edge of the upper bank in your measurement. The bottom of the lower bank is indicated by the water line at base flow. The top of the upper bank is usually demarcated by the edge of the floodplain.

Length of Eroding Banks (LN ERODED)

The "LN ERODED" column is divided into 2 subcolumns (LEFT and RIGHT). Record the length of stream where active erosion is present for both the left bank and the right bank of the 20m stream reach. Any portion of the bank where active erosion is present from the bottom of the lower bank to the top of the upper bank is included in this measurement. The bottom of the lower bank is indicated by the water line at base flow. The top of the upper bank is usually demarcated by the edge of the floodplain. The maximum for each measurement is 20m or the total length of the stream reach.

Average Slope

The "^{o} SLOPE BANK" column is divided into 2 subcolumns (LEFT and RIGHT). Record the average slope of the bank (in degrees) over the entire 20 m reach. That is, a vertical bank would be 90° while all other estimates would be less than 90°. Measurements are taken from the edge of the lower bank to the edge of the upper bank.

Riparian Zone Width

The "RIP WIDTH" column is divided into 2 subcolumns (LEFT and RIGHT). Record the average width of the riparian vegetation for each side of the stream along the entire 20 m reach. The riparian zone, for OCC purposes, extends from the top of the upper bank outwards from the stream. Measure the riparian zone width to a maximum of 50m. The riparian zone ends where the unmanaged (i.e. not plowed or mowed) portion of land ends. In other words, the riparian zone stops where active management such as pasture or crop management begins.

The expected riparian vegetation will vary across the state with bottomland hardwood forest in the east and the density of trees diminished in the west. Therefore a functional riparian zone will vary from a fairly dense forest with sparse grasses to land that is mostly grassland or rangeland with a few scattered trees. For consistency, forest, grassland, and pasture have been defined below:

Forest:	Large trees are so dense that a medium size tractor and a 6' brush hog cannot be used for brush control. Forest is included in the riparian zone
Grassland	Woody shrub and sapling growth can be controlled using a 6' brush hog and a medium size tractor in between the larger trees but there is no evidence of active management (e.g.. haying, planting of non-native pasture grasses, mowing, herbicide application, cattle grazing, harvesting of tree nuts). Grasslands with no active management should be included in the riparian zone. Rangelands dominated by native grasses and with light grazing designed to mimic the natural grazing patterns of bison and elk are also considered grasslands.
Pasture:	Woody shrub and sapling growth can be controlled using a 6' brush-hog and a medium size tractor in between the larger trees, and active management is present (e.g.. haying, planting of non-native pasture grasses, mowing, herbicide application, cattle grazing, harvesting of tree nuts). Actively management pastures are not included in the riparian zone.

Riparian Condition

The "RIP CONDITION" column is divided into 2 subcolumns (LEFT and RIGHT). Natural riparian vegetation is typically bottomland hardwood forest, but when disturbances have been or are present there will be varying amounts of herbaceous plants and bare soil also. For this column the decision must be made as to whether the majority of the land in the riparian zone, on either side of the stream, is grassland or forest. Pasture is excluded. Refer to the definitions presented in the Riparian Width section.

In addition to the habitat type, there is a determination of how much soil is exposed. In grassy areas, this is a straightforward determination and is done by estimating the average % of bare soil observed within the 20-meter riparian zone in question.

Forest, while not expected to have grasses & forbs covering the ground, is expected to have a layer of spongy duff composed of organic matter in various states of decay covering the soil. This layer is usually covered by an accumulation of recently fallen leaves or annual herbaceous vegetation that has not started to decay. The top layer of leaves and/or vegetation will have to be moved out of the way to determine if the duff layer is present. Soil not covered by duff should be counted as bare. Estimate the % bare soil exposed in forest while walking the area in question.

The riparian zone on both sides of the stream should be placed in one of the following categories.

1A	STABLE FOREST	<1% bare soil exposed
1B	MODERATELY USED FOREST	1-10% of surface is bare soil
1C	HEAVILY USED FOREST	>10% of surface is bare soil
2A	GOOD CONDITION GRASSLAND	<1% bare soil exposed
2B	FAIR CONDITION GRASSLAND	1-5% bare soil exposed
2C	POOR CONDITION GRASSLAND	>5 <20% bare soil exposed
2D	BAD CONDITION GRASSLAND	>20% bare soil exposed

Cattle

The CATTLE column is divided into 4 subcolumns (%TRAM, #CP, TRAIL, AVG WIDTH). This category attempts to identify the impact cattle are having on the habitat:

- **%TRAM:** Percent of land trampled. This is an estimate of land where livestock trampling is evident within one meter either way of the transect. In other words, you are assessing the percentage of trampling at a 2-meter wide strip that runs from the top of the right upper bank across the stream to the top of the left upper bank.
- **#CP:** Record the number of cow pies in a 2-meters wide transect.
- **TRAIL:** This is the number of livestock trails on both banks that reach the stream over the entire 20 meter segment. A single trail that crosses the stream and goes up the other side counts as two trails.
- **AVG WIDTH:** The average width in meters of all the trails within the 20m reach

Comments

If a road is contributing excess sediment to the stream, or a pipe is discharging to the stream or there is a dump present or any other thing which you deem to be significant is present, record it in the comment block at the end of the page. Additional comments can be included at the bottom of the page. Any reach specific comments should include the distance from the start of the assessment.

1.11 Sample Handling & Preservation

Not applicable

1.12 Sample Preparation and Analysis

Not applicable

1.13 Troubleshooting

Consult the Environmental Monitoring Coordinator

1.14 Data Acquisition, Calculation & Data Reduction

Not applicable

1.15 Computer Hardware & Software

Not applicable

1.16 Data Management & Records Management

1.16.1 Field Notation

All measurements and observations made at each site should be recorded on the **Stream Habitat Assessment Sheet** (see **SOP Appendix: Data Sheets**). A **Site Collection Sheet** (see **SOP Appendix: Data Sheets**) should also be filled out; include all physical and chemical information if required by the QAPP or instructed by the Monitoring Coordinator. In addition, flow measurement should be recorded on the **Flow Meter Data Sheet** or **Timed Flow Data Sheet** (see

SOP Appendix: Data Sheets) if applicable; see the Flow Measurement SOP. Data should be recorded following procedures outlined in the **Procedure for Completing Field Data Sheets SOP**.

1.16.2 Chain of Custody Procedure

Not applicable.

2.0 QA/QC SECTION

2.1 Training

Training of field personnel will be done through dry run exercises in the laboratory and field to familiarize them with instrument operation, use, calibration and maintenance. All samplers should read Rapid Bioassessment Protocols for Use in Wadeable Streams and Rivers, 2nd Edition (EPA, 1999) prior to performing a habitat assessment. All operators are required to become familiar with the SOP documents. Prior to solo assessment, field personnel must be evaluated in a field setting for proper use of equipment and sample collection protocol. Annual field audits and training exercises are performed on sample collectors following procedures outlined in the Quality Management Plan.

2.2 Maintenance

Equipment should be kept in working order.

2.3 QC Procedures

If required by the QAPP, replicate samples will be collected.

3.0 REFERENCES

EPA, (1999) Rapid Bioassessment Protocols for Use in Wadeable Streams and Rivers, 2nd Edition, EPA 841-B-99-002, Office of Water, Washington, D.C.

Butler, D., (1999) Personal Communication, Senor Biologist, Oklahoma Conservation Commission, Oklahoma City, OK.

Nielsen, L.A. and D.L. Johnson, (1983) Fisheries Techniques, American Fisheries Society.

4.0 APPENDIX A

STANDARD OPERATING PROCEDURE
Field Summary

Apparatus and Materials
- field data sheets
- clip board
- wading rod (graduated in 0.1 m units)
- hip chain and/or range finder
- GPS unit

Preparation
- A representative stream reach is selected and measured such that primary physical features are included in the reach (riffles, runs, and pools).
- The reach should be located away from the influences of major tributaries and bridge/road crossings.

Sample Collection
All measurements and observations made at each site should be recorded on the **Stream Habitat Assessment Sheet** (see **SOP Appendix: Data Sheets**). A **Site Collection Sheet** (see **SOP Appendix: Data Sheets**) should also be filled out; include all physical and chemical information if required by the QAPP or instructed by the Monitoring Coordinator. In addition, flow measurement should be recorded on the **Flow Meter Data Sheet** (see **SOP Appendix: Data Sheets**) if applicable.

Instructions for filling out the **Stream Habitat Assessment Sheet**:

SITE INFORMATION:
- SITE NAME: Record the stream name from the USGS 7-1/2' map name. If a county map, soil map, or other map has a different name, the USGS 7-1/2' map takes precedence. If a stream is unnamed on the USGS map, but named on another map, use that name, but write the name of the map in parentheses beside the stream name.
- WBID #: Record the Water Body Identification number.
- SITE DATE: Record the site date in MM/DD/YR format.
- START POINT: Provide a GPS lat/long and a brief written description of the starting point (first observation).
- SITE TIME: Record the start time in military format. The “site time” is when initial activities began at the site.
- END POINT: Provide a GPS lat/long and a brief written description of the ending point (last observation).
- SINUOSITY: Stream length/valley length. This can be assessed in the field or from aerial photographs. USGS topographic maps should not be used.
- INVESTIGATORS: All people involved with the sampling should be recorded; the “crew leader” (the person responsible for data custody and reporting) should be circled on the form.
- DIRECTION: Record if the assessment was done upstream or downstream from the starting point.

Distance (DIST)
In general, each stream reach is sampled for a distance of 400 meters. Under most circumstances the 400 meter reach is divided into twenty-20 meter segments. In larger streams a reach longer than 400m may need to be sampled, due to the availability of habitat types. If possible the reach should be extended to include a run, riffle and pool. Any causes of deviation from a 400m reach should be documented. Depending on the QAPP, the measurement interval can be lengthened or shortened.

If using a rangefinder, select an easily visible landmark such as a large tree or rock to aim for. If the stream bends before a full reading can be made, measure the distance to the bend and then measure the remaining distance after going around the bend.

If using a hip chain, attach the string to a fixed object at the starting point and start measuring the distance while moving along the reach. Make sure to attach string to a branch or rock along bends to accurately measure the stream distance.

Depth

The column "DEPTH" is divided into 3 subcolumns (L1/4, C, R1/4). In general, the depth of water is measured in meters to the nearest 0.1m. The stream is divided into 3 segments: left ¼, right ¼, and center. The left water's edge of the stream is on left hand side while looking downstream.

- The left 1/4 (**L1/4**) is the depth of water midway between the center of the stream and the left water's edge.
- Center (**C**)
- Right 1/4 (**R1/4**) is the depth of water midway between the center of the stream and the right water's edge.

If the stream consists of one wide channel and one narrower channel separated by an island, take two evenly spaced depth measurements in the wide channel and one in the center of the narrow channel.

Width

The column "WIDTH" is divided into 2 subcolumns (WTR and BNK). The width measurement takes into account the width of the wetted surface or water, and the width of the lower bank to the nearest 1m.

- The width of the water (**WTR**) refers to the water's edge to water's edge, or a perpendicular section across the wetted surface. If there are vegetated "island" areas in the stream, subtract out these areas from the wetted width and make note of this.
- The width of the bank (**BNK**) refers to the distance between the tops of the left and right lower banks. The top of the lower bank is the normal high water line, which is usually marked by the beginning of well-established perennial vegetation. Below this line will be gravel and bare soil. There may be a sparse covering of annual vegetation below this line.

Substrate

The "SUBSTRATE" column is divided into 8 subcategories (Si&C, SND, GVL, CBL, BLD, BRK, POM, and HPC). The substrate measurement characterizes the physical benthic material. Substrate is evaluated from the water's edge on one side to the water's edge on the other side of the stream at the transect. The substrate is characterized based on component categories: silt and clay, sand, gravel, cobble, boulder, bedrock, particulate organic matter and/or hardpan clay. Record the fraction of each category as a percent of total. The total of all substrate components should add up to 100 percent. The categories include the following:

- **Si&C** Loose silt and clay (not gritty between the fingers)
- **SND** Sand or rock particles smaller than ladybug size (gritty between the fingers); 0.1 to 2mm median diameter.
- **GVL** Gravel rocks ladybug to tennis ball size; rocks from 2 mm to 50 mm median diameter.
- **CBL** Cobble rocks tennis ball to basketball size; rocks from 50 mm to 250 mm median diameter.
- **BLD** Boulder rocks basketball to car size; rocks > 250mm median diameter.
- **BRK** Bedrock; rock area greater than a car in size
- **POM** Particulate organic matter; rotten leaves and fragments of stick and logs.
- **HPC** Hardpan clay; firm, consolidated fine substrate.

Habitat Type

The HABITAT TYPE column is subdivided into 4 additional columns (RIF, PL, RUN, or DRY). Check the cell that is most applicable to the habitat type present at the transect. If there are two obvious habitat types at the cross section being measured, check both boxes. An example is when a backwater pool is encountered beside a run or riffle.

- A riffle (**RIF**) is defined as any sudden downward change in the level of the streambed such that the surface of the water become disrupted by small waves and usually makes a sound.
- A pool (**PL**) has a smooth surface with no or very little current and can be deep or shallow.
- A run (**RU**) has an obvious current, may be deep or shallow and often has a surface that may be slightly broken, but does not make any noise.
- Check dry (**DR**) if the stream has no water in it at the point being measured.

In-Stream Cover % Area

The IN-STREAM COVER % AREA column is divided into 9 subcolumns (UCB, LWD, SWD, RTS, BRL, SAV, EAV, TV, and CB&G). This category attempts to quantify the amount of cover present for fish in the section of stream you walked from the previous station to the present one. For example, if the section was 20 meters long and averaged 6 meters wide, its area would be 120 m^2. A submerged log about 3 m long by 0.5 m wide would offer 1.5 m^2 cover, and you would note that the LWD (large woody debris) category offered 1.5/120 or 1.3 percent cover. Water willow, an emergent aquatic macrophyte, might be growing in shallow water along the edge of the stream. If both edges had a zone about 1 meter wide where it grows, there would be (1

meter) (20 meters) (2 sides)=40m^2 of emergent aquatic vegetation (EAV) in the 120m^2 section of stream and you would check 40/120 or 33 percent in the EAV column. **Note that the totals of the percent cover columns for each row will rarely add up to 100 percent and may often be 0 percent**. These columns may sum to a value greater than 100%.

The categories are:

- **UCB** Undercut Banks
- **LWD** Large Woody Debris—woody debris in the water > 10 cm. in diameter.
- **SWD** Small Woody Debris—woody debris in the water ≤ 10 cm. in diameter.
- **RTS** Roots—these are submerged root wads of trees. If single or occasional roots are encountered, count them in one of the woody debris categories.
- **BRL** Bedrock Ledges—underwater bedrock ledges not forming part of an undercut bank.
- **SAV** Submerged Aquatic Vegetation.
- **EAV** Emergent Aquatic Vegetation.
- **TV** Terrestrial vegetation that is currently underwater. An example would be tree branches or grass leaves that are actually hanging down into the stream.
- **CBG** Cobble, Boulder, and Gravel. This is an estimate of the percent coverage of cobble and boulder in the 20-meter section. It may not be the same number as the percent composition of cobble and boulder in the cross section where you estimated substrate since they represent different areas.

Percent Embeddedness[1] (EMB)

The degree to which boulders and cobble have been surrounded by fine sediment indicates suitability of the stream substrate as habitat. Embeddedness is evaluated by visual observation of the degree to which larger particles have been surrounded by sediment. This quantifies the amount of silt, clay, and sand that has been deposited in riffles. Percent embeddedness should be recorded when in a riffle. If there are no riffles within the 400m, then calculate embeddedness from a stable run. Record the percent embeddedness only at the transect.

If there is no fine material surrounding the cobble and gravel found in the riffles, and there is at least some free space under the rocks, that is 0 percent embedded. If the free space under the rocks is filled but the sides are untouched, count that as 5 percent embedded. As the level of fines rises up the cobble sides, estimate the percentage of the total height of the cobbles that is covered. This is the embeddedness estimate. An obvious "embeddedness line" is often distinctly observed on the side of a rock when it is removed from the water.

Percent Canopy Cover (CAN)

At each measuring station, estimate the percent canopy cover directly over the water in the previous segment. It can range from 0 to 100 percent, but if any "sky" is observed directly overhead, the estimate should be less than 100 percent.

Point Bar (Pt)

If a recently formed (unstable) point bar is present, that is, it has no or little vegetation, put a check in this box.

Deposition and Scouring (D+S)[1]

These parameters relate to the destruction of in-stream habitat. Characteristics to observe are scoured substrate and degree of siltation in pools and riffles. If there is evidence of scouring (smooth, clean bedrock or hardpan play) or deposition (loose, shifting bottoms of fine sand or silt or filled in pools) in the previous segment surveyed, check this box.

Percent Bank Vegetative Cover (BV)

Record an estimate of the percent of total area for each bank (left and right) separately over the entire 20m reach that is protected from erosion by well-established, perennial vegetation. Soil does not have to be covered as long as it is stable.

Dominant Vegetation (DV)

Place an S (shrub), T (tree), or G (grasses and forbs) in the box indicating which type of vegetation is most dominant on each of the banks separately in terms of percent of ground protected over the entire 20m reach. For our purposes, shrubs are any woody plant whose trunk and branches are <= 10 cm in diameter. If the vegetation is mixed but each of the three groups contribute at least 20% of the total put an M in the box.

Height of Bank (HT OF BANK)

Record the average height (in meters) for each bank (left and right separately) from the bottom of the lower bank to the top of the upper bank for the entire 20m reach. The bottom of the lower bank is indicated by the water line at base flow. The top of the upper bank is usually demarcated by the edge of the floodplain.

Average Height of the Eroding Banks (HT ERODED)

The "HT ERODED BK" column is divided into 2 subcolumns (LEFT and RIGHT). Record the average height of the eroding banks on either side of the stream segment for the entire 20m reach. The height of the erosion is measured as the distance between the bottom of the active erosion and the top of the active erosion. Include any active erosion from the bottom of the lower bank to the edge of the upper bank in your measurement. The bottom of the lower bank is indicated by the water line at base flow. The top of the upper bank is usually demarcated by the edge of the floodplain.

Length of Eroding Banks (LN ERODED)

The "LN ERODED" column is divided into 2 subcolumns (LEFT and RIGHT). Record the length of stream where active erosion is present for both the left bank and the right bank of the 20m stream reach. Any portion of the bank where active erosion is present from the bottom of the lower bank to the top of the upper bank is included in this measurement. The bottom of the lower bank is indicated by the water line at base flow. The top of the upper bank is usually demarcated by the edge of the floodplain. The maximum for each measurement is 20m or the total length of the stream reach.

Average Slope

The "^{o} SLOPE BANK" column is divided into 2 subcolumns (LEFT and RIGHT). Record the average slope of the bank (in degrees) over the entire 20m reach. That is, a vertical bank would be 90° while all other estimates would be less than 90°. Measurements are taken from the edge of the lower bank to the edge of the upper bank.

Riparian Zone Width

The "RIP WIDTH" column is divided into 2 subcolumns (LEFT and RIGHT). Record the average width of the riparian vegetation for each side of the stream along the entire 20m reach. The riparian zone, for OCC purposes, extends from the top of the upper bank outwards from the stream. Measure the riparian zone width to a maximum of 50m. The riparian zone ends where the unmanaged (i.e. not plowed or mowed) portion of land ends. In other words, the riparian zone stops where active management such as pasture or crop management begins.

The expected riparian vegetation will vary across the state with bottomland hardwood forest in the east and the density of trees diminished in the west. Therefore a functional riparian zone will vary from a fairly dense forest with sparse grasses to land that is mostly grassland or rangeland with a few scattered trees. For consistency, forest, grassland, and pasture have been defined below:

Forest:	Large trees are so dense that a medium size tractor and a 6' brush hog cannot be used for brush control. Forest is included in the riparian zone
Grassland	Woody shrub and sapling growth can be controlled using a 6' brush hog and a medium size tractor in between the larger trees but there is no evidence of active management (e.g.. haying, planting of non-native pasture grasses, mowing, herbicide application, cattle grazing, harvesting of tree nuts). Grasslands with no active management should be included in the riparian zone. Rangelands dominated by native grasses and with light grazing designed to mimic the natural grazing patterns of bison and elk are also considered grasslands.
Pasture:	Woody shrub and sapling growth can be controlled using a 6' brush-hog and a medium size tractor in between the larger trees, and active management is present (e.g.. haying, planting of non-native pasture grasses, mowing, herbicide application, cattle grazing, harvesting of tree nuts). Actively management pastures are not included in the riparian zone.

Riparian Condition

The "RIP CONDITION" column is divided into 2 subcolumns (LEFT and RIGHT). Natural riparian vegetation is typically bottomland hardwood forest, but when disturbances have been or are present there will be varying amounts of herbaceous plants and bare soil also. For this column the decision must be made as to whether the majority of the land in the riparian zone, on either side of the stream, is grassland or forest. Pasture is excluded. Refer to the definitions presented in the Riparian Width section.

In addition to the habitat type, there is a determination of how much soil is exposed. In grassy areas, this is a straightforward determination and is done by estimating the average % of bare soil observed within the 20m riparian zone in question. Forest, while not expected to have grasses & forbs covering the ground, is expected to have a layer of spongy duff composed of organic matter in various states of decay covering the soil. This layer is usually covered by an accumulation of recently fallen leaves or

annual herbaceous vegetation that has not started to decay. The top layer of leaves and/or vegetation will have to be moved out of the way to determine if the duff layer is present. Soil not covered by duff should be counted as bare. Estimate the % bare soil exposed in forest while walking the area in question.

The riparian zone on both sides of the stream should be placed in one of the following categories.

1A	STABLE FOREST	<1% bare soil exposed
1B	MODERATELY USED FOREST	1-10% of surface is bare soil
1C	HEAVILY USED FOREST	>10% of surface is bare soil
2A	GOOD CONDITION GRASSLAND	<1% bare soil exposed
2B	FAIR CONDITION GRASSLAND	1-5% bare soil exposed
2C	POOR CONDITION GRASSLAND	>5 <20% bare soil exposed
2D	BAD CONDITION GRASSLAND	>20% bare soil exposed

Cattle

The CATTLE column is divided into 4 subcolumns (%TRAM, #CP, TRAIL, AVG WIDTH). This category attempts to identify the impact cattle are having on the habitat:

- **%TRAM:** Percent of land trampled. This is an estimate of land where livestock trampling is evident within one meter either way of the transect. In other words, you are assessing the percentage of trampling at a 2-meter wide strip that runs from the top of the right upper bank across the stream to the top of the left upper bank.
- **#CP:** Record the number of cow pies in a 2-meters wide transect.
- **TRAIL:** This is the number of livestock trails on both banks that reach the stream over the entire 20 meter segment. A single trail that crosses the stream and goes up the other side counts as two trails.
- **AVG WIDTH:** The average width in meters of all the trails within the 20m reach

Comments

If a road is contributing excess sediment to the stream, or a pipe is discharging to the stream or there is a dump present or any other thing which you deem to be significant is present, record it in the comment block at the end of the page. Additional comments can be included at the bottom of the page. Any reach specific comments should include the distance from the start of the assessment.

OKLAHOMA CONSERVATION COMMISSION
WATER QUALITY DIVISION

STANDARD OPERATING PROCEDURE

HARDNESS MEASUREMENT

(Hach Digital Titrator Model 16900-01)

1.0 PROCEDURAL SECTION

1.1 Scope and Application[1]

Hardness of water is a measure of the total concentration of the calcium and magnesium ions expressed as calcium carbonate. The most important impact of hardness on fish and other aquatic life appears to be the affect the presence of these ions has on the other more toxic metals such as lead, cadmium, chromium and zinc. Generally, the harder the water, the lower the toxicity of other metals to aquatic life. In hard water, some of the metal ions form insoluble precipitates and drop out of solution and are not available to be taken in by the organism. Large amounts of hardness are undesirable mostly for economic or aesthetic reasons. If a stream or river is a drinking water source, hardness can present problems in the water treatment process.

1.2 Summary of Method

Calcium and magnesium ions in the sample are sequestered upon the addition of disodium ethylenediamine tetraacetate (Na_2EDTA). The end point of the reaction is detected by means of Eriochrome Black T indicator, which has a red color in the presence of calcium and magnesium and a blue color when the cations are sequestered.

In this procedure, a water sample is buffered to pH 10.1 and indicator is then added to the buffered sample. The indicator, when added to a solution containing Ca and Mg ions turns red. EDTA, the titrant, complexes with Mg and Ca cations, removing them from association with the indicator. When all the Mg and Ca ions are complexed with EDTA, the indicator will turn blue.

1.2.1 Definitions

- **Hardness = Ca^+** (as $CaCO_3$) **+ Mg^+** (as $CaCO_3$)

Hardness (mg/L) is reported as the total concentration of the calcium and magnesium ions expressed as calcium carbonate ($CaCo_3$).

1.3 Health and Safety Warnings

Protective clothing and eye protection is required during the titration process, since the reagents are eye irritants. If a drop gets in your eye, flush thoroughly with whatever water is available. Do not wait until you can get to a source of pure water if none is immediately available.

1.4 Cautions

Make sure all air bubbles are removed from the delivery tube prior to sample reading.

1.5 Interference[12]

- Some transition and heavy metals complex the indicator and prevent the color change at the end point.
- This test has a slow titration time relative to the alkalinity test. Extremely cold samples may be even slower to change colors, so titrate cold samples more slowly to allow extra time for change.

1.6 Personnel Qualification

Field personnel must be trained and evaluated on use of equipment prior to collecting samples or data. Use of the equipment is subject to approval by the QA Officer and/or the Environmental Monitoring Coordinator. Training will be done through dry run exercises in the laboratory and field to familiarize field personnel with operation/collection, calibration, and maintenance. Investigators must be familiar with the SOP document and owner's manual, when applicable.

1.7 Apparatus & Materials

- Hach Digital Titrator Model 16900-01
- 0.800 M EDTA and 0.080 M EDTA Titration Cartridges
- 250 mL Erlenmyer flask
- 100 mL graduated cylinder
- Hardness 1 Buffer
- ManVer 2 Hardness Indicator Powder Pillows
- Deionized water for necessary dilution

1.8 Instrument/Method Calibration

[12] Text taken directly or in part from Hach 1988

See QC Section 2.3.

1.9 Equipment Operation & Preparation [4]

1.9.1 Range Selection

- Select the sample volume corresponding to the expected hardness concentration as mg/L $CaCO_3$ from Table 1. Failure to select the appropriate volume will manifest when:
  a. The titration with 100 mL of sample requires more than a reading of 400 on the titrator to reach the endpoint.
  b. The titration with 50 mL of sample takes less than a reading of 100 on the titrator to reach the endpoint.

Table 1. Sample volume and titration cartridge concentration determination

Range (mg/L $CaCO_3$)	Sample Volume (mL)	Titration Cartridge (M EDTA)	Catalog Number	Digit Multiplier
10-40	100	0.080	14364-01	0.1
40-160	25	0.080	"	0.4
100 – 400	100	0.800	14399-01	1.0
200 – 800	50	0.800	"	2.0
500 – 2000	20	0.800	"	5.0
1000 – 4000	10	0.800	"	10.0

1.9.2 Set-up

1. Attach the EDTA titration cartridge to the titrator. In order to attach the cartridge, the plunger must be totally retracted. To do this, press the plunger release button and slide the plunger all the way to the right. Place cartridge in the end slot and turn slightly to secure.
2. Once the cartridge is in place, slide the plunger forward to meet the cartridge seal.
3. Remove the cap on the cartridge and insert a clean delivery tube as shown in Figure 2.
4. Expel any air by holding the cartridge tip up while turning the delivery knob. Turn delivery knob to flush tube and continue flushing until 10 drops have been evacuated.
5. Use the counter reset knob to turn the digital counter back to zero. Shake or rinse the tip to remove excess fluid.

1.9.3 Measuring Total Hardness

1. Use a graduated cylinder to measure the appropriate volume of sample into a 250-mL Erlenmeyer flask. See Table 1 for sample volume. If a sample volume of less than 100 mL is required (i.e. 50, 25, 20, or 10 mL), add DI water to the flask to bring the total volume to 100 mL.
2. Add 2 ml of Hardness 1 Buffer Solution to the sample and swirl to mix.
3. Add contents of one ManVer 2 Hardness Indicator Powder Pillow to flask and swirl to mix.
4. Immerse the delivery tube tip in the solution and swirl the flask while titrating with EDTA. Titrate by turning the delivery knob. Keep turning the knob and swirling the sample until the sample changes from red to pure blue. The reaction will be slow, so swirl thoroughly after each addition of EDTA to allow time for color change.
5. Determine Total Hardness concentration by using the following equation:

   Digits Required x Digit Multiplier = mg/L as $CaCO_3$

   Where:

   Digits Required = number of units displayed on the titrator's digital counter
   Digit Multiplier = appropriate factor selected from Table 1

   Record the result on the appropriate field data sheet and/or field notebook.
6. If the titration fails, change the sample volume and repeat the process.
7. When completed, rinse the flask, dry all equipment, and remove the cartridge for storage. Always re-cap cartridges.

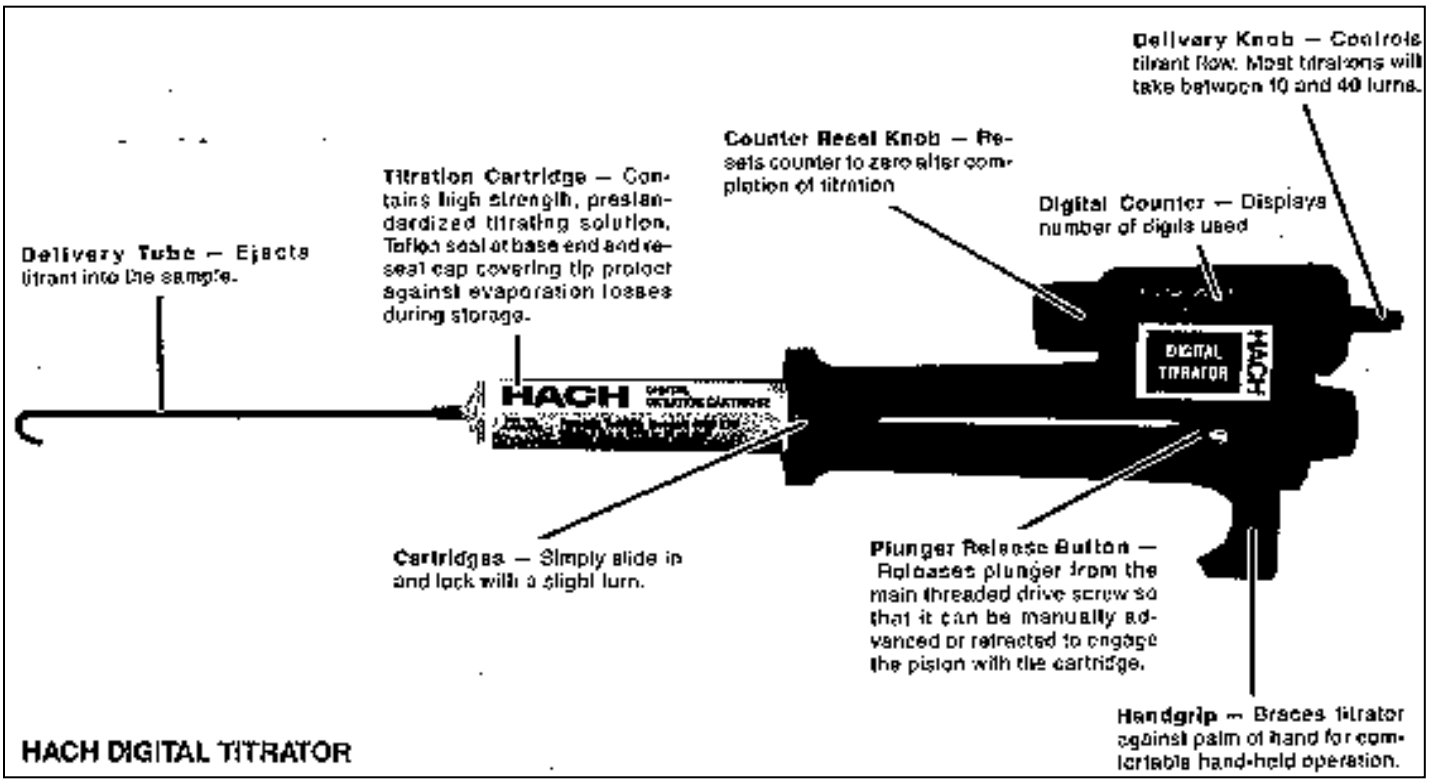

Figure 1. Hach Digital Titrator with component description (Hach, 1988).

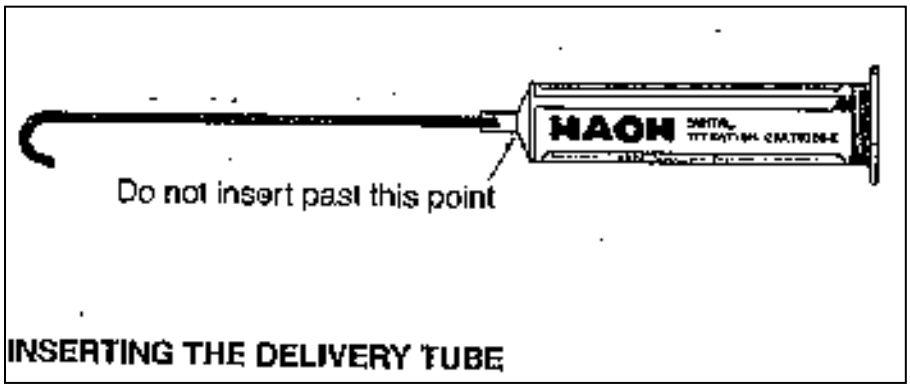

Figure 2. Hach Digital Cartridge with Delivery tube (Hach, 1988).

1.10 Sample Collection

Water samples should be collected from mid channel, from an area of flowing water. Care should be taken to avoid collection of any surface scum.

1.11 Sample Handling & Preservation

Measurement should be performed in the field at the time of collection. However, if measurement is performed in the laboratory or at a later date, collect the samples in clean glass or HDPE plastic container with zero headspace. Place samples on ice. Avoid excessive agitation or prolonged exposure to air.

1.12 Sample Preparation and Analysis

There is 7 day holding time on hardness if stored at 4 °C and acidified to pH 2 with concentrated nitric acid (Hach 1988), but it is recommended that the samples be read as soon as possible after collection, within 24 hours. Neutralize acidified sample to pH 7 with ammonium hydroxide before testing.

1.13 Troubleshooting
See owner's manuals.

1.14 Data Acquisition, Calculation & Data Reduction
Not applicable.

1.15 Computer Hardware & Software
Not applicable.

1.16 Data Management & Records Management

1.16.1 Field Notation
All hardness measurements made at each site should be recorded on the **Site Collection Sheet** (see **SOP Appendix: Data Sheets**). Data should be recorded following procedures outlined in the **Procedure for Completing Field Data Sheets SOP**.

1.16.2 Chain of Custody Procedure
Hardness should be measured in the field; therefore, no Chain of Custody form is required. However, if the laboratory is going to measure hardness, then follow the procedures described in the **Chain of Custody and Sample Labeling SOP**.

2.0 QA/QC SECTION

2.1 Training
Training of field personnel will be done through dry run exercises in the laboratory to familiarize them with instrument operation, calibration, and maintenance. All operators are required to become familiar with the SOP documents and owner's manual. Prior to solo sample collection, field personnel are evaluated in a field setting for proper use of equipment and sample collection protocol. Annual field audits are performed on sample collectors following procedures outlined in the **Quality Management Plan.**

2.2 Maintenance
- Clean outside of unit with a with moist cloth
- Cap all cartridges
- Keep glassware clean

2.3 QC Procedures
The digital titrator should be checked and calibrated against standards each quarter as directed by the QA officer at a QA and meter calibration session. Values will be recorded in the equipment logbook.

The collection of QA samples should follow the procedure specified in the **Preparation of Spike, Duplicate, and Blank Samples for Routine QA SOP**. Results will be recorded on the field sheets.

2.3.1 Accuracy Check (Sample Spike)
To verify analytical technique, use 20 mL of the Calcium Standard Solution, 1000-mg/L as $CaCO_3$. Perform the procedure as described above in Section 1.9.3. This solution will read 1000 mg/L. Perform the following accuracy check when interferences are suspected.

1. Snap the neck off a Hardness Voluette Ampule Standard, 10,000-mg/L as $CaCO_3$.
2. Use a pipette to add 0.1 mL of standard to the sample titrated in *step 4* (Section 1.9.3). Resume titration back to the same end point. Record the number of digits required.
3. Repeat, using two more additions of 0.1 mL. Titrate to the end point after each addition.
4. Each 0.1 mL addition of standard should require 10 additional digits of 0.800 M titrant.

3.0 REFERENCES

Hach (1988) Digital Titrator Model 16900-01 Manual, Hach Company, Loveland, Colorado.

4.0 APPENDIX A

STANDARD OPERATING PROCEDURE
Field Summary

Hardness Measurement

Equipment Operation & Preparation

Range Selection

- Select the sample volume corresponding to the expected hardness concentration as mg/L $CaCO_3$ from Table 1.
- Failure to select the appropriate volume will manifest when:
  a. The titration with 100 mL of sample requires more than a reading of 400 to reach the endpoint.
  b. The titration with 50 ml of sample takes less than a reading of 100 to reach the endpoint.

Table 1. Sample volume and titration cartridge concentration determination

Range (mg/L $CaCO_3$)	Sample Volume (mL)	Titration Cartridge (M EDTA)	Catalog Number	Digit Multiplier
10-40	100	0.080	14364-01	0.1
40-160	25	0.080	"	0.4
100 – 400	100	0.800	14399-01	1.0
200 – 800	50	0.800	"	2.0
500 – 2000	20	0.800	"	5.0
1000 – 4000	10	0.800	"	10.0

Set-up

1. Attach the EDTA titration cartridge to the titrator. In order to attach the cartridge, the plunger must be totally retracted. To do this, press the plunger release button and slide the plunger all the way to the right. Place cartridge in the end slot and turn slightly to secure.
2. Once the cartridge is in place, slide the plunger forward to meet the cartridge seal.
3. Remove the cap on the cartridge and insert a clean delivery tube as shown in Figure 2.
4. Expel any air by holding the cartridge tip up while turning the delivery knob. Turn delivery knob to flush tube and continue flushing until 10 drops have been evacuated.
5. Use the counter reset knob to turn the digital counter back to zero. Wipe or rinse the tip to remove excess fluid.

Measuring Total Hardness

1. Use a graduated cylinder to measure the appropriate volume of sample into a 250-mL Erlenmeyer flask. See Table 1 for sample volume. If a sample volume of less than 100 mL is required (i.e. 50, 25, 20, or 10 mL), add DI water to the flask to bring the total volume to 100 mL.
2. Add 2 ml of Hardness 1 Buffer Solution to the sample and swirl to mix.
3. Add contents of one ManVer 2 Hardness Indicator Powder Pillow to flask and swirl to mix.
4. Immerse the delivery tube tip in the solution and swirl the flask while titrating with EDTA. Titrate by turning the delivery knob. Keep turning the knob and swirling the sample until the sample changes from red to pure blue. **The reaction will be slow, so swirl thoroughly after each addition of EDTA to allow time for color change. Extremely cold samples may be even slower to change colors, so titrate cold samples more slowly to allow extra time for change.**
5. Determine Total Hardness concentration by using the following equation:

   Digits Required x Digit Multiplier = mg/L as $CaCO_3$

   Where:

   Digits Required = number of units displayed on the titrator's digital counter
   Digit Multiplier = appropriate factor selected from Table 1

   Record the result on the appropriate field data sheet.
6. If the titration fails, change the sample volume and repeat the process.
7. When completed, rinse the flask, dry all equipment, and remove the cartridge for storage. Always re-cap cartridges.

OKLAHOMA CONSERVATION COMMISSION
WATER QUALITY DIVISION

STANDARD OPERATING PROCEDURE

INORGANIC AND BACTERIA SAMPLE COLLECTION

1.0 PROCEDURAL SECTION

1.1 Scope and Application[13]

Collection of surface water samples for data analysis is a critical component of an effective water quality program. The manner in which water samples are collected has a direct impact on the quality of the data. The object is to collect an aliquot small enough in volume to be transported conveniently and handled in the laboratory while still accurately representing the material being sampled.

1.2 Summary of Method

This procedure describes the proper way to collect and preserve surface water samples for inorganic and bacteria analysis. Inorganic analysis includes: ortho-phosphorus, total phosphorus, chloride, sulfate (most anions), nitrate, nitrite, ammonia, most cations (metals; Al, Ca, Mg, Fe, Mn, etc.), total suspended solids, total dissolved solids, acidity, and others. Bacteria analysis, which is **conducted only during the recreational period from May 1 through September 30**, commonly includes *Escherichia coli*.

1.2.1 Definitions[1]

- Grab Samples: A sample collected at a particular place and time, representing the composition of the source at that place and time.
- Composite Samples: A mixture of grab samples taken at various time intervals or at different locations.
- Integrated Samples: A mixture of grab samples collected from different points simultaneously or as nearly as possible.
- Recreational Sampling Period: **May 1 – September 30**

1.3 Health and Safety Warnings

- Acid is used to preserve some samples. Proper eyewear, gloves, and protective clothing should be worn to prevent injury.
- Avoid sample collection in deep or swift water without proper safety devices (e.g. flotation devices etc.).

1.4 Cautions[14]

- Use only new sample containers/bottles. Certified clean bottles may be needed for certain analyses; refer to the Quality Assurance Project Plan.
- Use only new, sterile sample containers for bacteria samples.
- Prior to sampling, keep sample bottles capped to prevent dust and dirt from entering the container.
- Do NOT rinse bacteria containers prior to filling.
- Collect enough sample volume to run the appropriate laboratory analysis.
- If sampling from a boat, collect from the bow, away and upwind/upstream of gasoline and the outboard motor.
- Avoid sampling near dams, piers or bridges because of the unnatural influence these structures introduce (e.g. eddies), which affect the accuracy of the sample. When sampling at a bridge site it is preferable to sample on the upstream side—make sure water is flowing.

1.5 Interference

- Dirty bottles (inside and out)
- Contaminated pipettes
- Preservation conditions—too warm or cold for bacterial samples
- Dust, precipitation and other atmospheric contaminants

1.6 Personnel Qualification

Field personal must be trained and evaluated on sample collection technique. Sample collection is subject to approval by the QA Officer and/or Monitoring Coordinator. Training will be done through dry run exercises in the laboratory and field to familiarize field personnel with procedures and techniques.

---

[13] Text taken directly or in part from Standard Methods (APHA, AWWA, WPCF, 1995).
[14] Portion may have been taken directly or in part from Csuros, 1994.

1.7 Apparatus & Materials

- New high-density polyethylene (HDPE) bottle, along with caps containing a polyethylene liner to prevent leakage. For bacteria sample collection use new, sterile containers—obtained from the laboratory. For critical measurement of ortho-phosphate, trace metals, and/or priority pollutants, certified clean bottles are required. Furthermore, protocol may require the use of Teflon containers in certain circumstances.
- Preservation acids (sulfuric, nitric, and/or hydrochloric) along with a measuring and dispensing device for the acid.
- Ice (depending on the sample collected).
- Coolers to contain samples.
- Bottle labeling marker.

1.8 Instrument/Method Calibration

Not applicable

1.9 Preparation

Sample containers should not interfere with the chemical analysis of the sample. In general, plastic containers are best for sampling inorganic constituents. Unless specified in the QAPP, new bottles that are immediately capped upon purchase are suitable for routine water collection. For some projects, certified clean bottles may be required or bottle washing may be necessary. Consult with the QA Officer prior to sample collection.

Some projects' QAPPs may require bottle washing. The cleaning procedure varies depending on the sample analysis.

<u>Physical Properties and Mineral Analysis</u>

- Wash bottles and caps with hot soapy water (Liquinox phosphorus-free soap) and rinse thoroughly with tap water.
- Rinse bottles and caps with DI water 3 to 5 times.
- Drain, dry and store tightly capped until used.

<u>Nutrients</u>

- Wash bottles and caps with hot soapy water (Liquinox phosphorus-free soap) and rinse thoroughly with tap water.
- Soak bottles and caps in 1:1 HCl (1 part acid to 1 DI part water) for 10 minutes.
- Rinse bottles and caps with DI water 3 to 5 times.
- Drain, dry and store tightly capped until used.

<u>Metals</u>

- Wash bottles and caps with hot soapy water (Liquinox phosphorus-free soap) and rinse thoroughly with tap water.
- Rinse bottles with 1:1 HCl, followed by tap water rinse.
- Soak bottles and caps in 1:1 HNO_3 for 10 minutes.
- Rinse bottles and caps with DI water 3 to 5 times.
- Drain, dry and store tightly capped until used.

1.10 Sample Collection

1.10.1 Inorganic Grab Sample

1. If possible, collect from the site with the least contamination first and the most contamination last. When possible samples should be collected in reaches having uniform flow (runs), and having a uniform and stable bottom contour, and where constituents are well mixed. These areas often occur just upstream of riffles. Sampling should be sited far enough above and below confluences of streamflow or point sources of contamination to avoid sampling a cross section where flows are poorly mixed or not unidirectional. Samples should be collected in reaches upstream from bridges or other structures, to avoid contamination from the structure or from a road surface. Additionally grab samples should be collected in a reach where other data are collected (dissolved oxygen, temperature, pH, conductivity, alkalinity, hardness, turbidity, and flow).
1. Use new HDPE bottles along with caps that have a plastic foam liner to prevent leakage. Typically, 1 liter will be sufficient for each set of parameters run. In other words, 1 L for physical properties (TSS, TDS, SO_4^{-2}, Cl, acidity, etc.), 1 L for nutrients, and 1 L for metals is enough for laboratory analysis and laboratory QA procedures. Check with the Monitoring Coordinator and/or the contracted laboratory for specific volume requirements.
2. Label the bottle using a permanent marker. Include site name, site date and time, WBID #, sample type, investigator initials, and preservation method. Refer to the Chain of Custody and Sample Labeling SOP for more instructions.

3. Rinse the cap and bottle three times with stream water from the same part of the waterbody that will be sampled. (Vigorously shake the bottle with the rinse water inside.)
4. Take care to sample away from any sediment that may have been stirred up when collecting rinse water or making other measurements, hold the sample bottle underwater so that the mouth of the bottle is approximately 6" inches underwater—whenever possible. Invert the bottle so the neck is upright and pointing towards the water flow. Take care not to collect any surface scum. If the surface scum looks significant (i.e. floating oil and grease, a dense bloom of floating blue-green algae, etc.) be sure to note this in the field notes on the "Sampling Site" sheet.
5. If the waterbody is too shallow to hold a bottle underwater without stirring up sediment, then collect water in another clean sample container and pour it into the bottle. You may have to collect several small portions to fill one bottle. Pour the sample immediately after collection so that the solids do not have time to settle out.
6. When collecting parameters that are directly influenced by interactions with the atmosphere (pH alkalinity and some metal species), fill the bottle until no air space is left and seal the cap tightly. Check for air bubbles.
7. When collecting samples for nutrients or metals leave approximately 1% headspace (10 mL in a 1L bottle) for the addition of acid preservative. Mix thoroughly.
8. When collecting for physical and chemical parameters that do not require preservation, leave roughly 1% headspace.
9. Check with Quality Assurance Project Plan or Environmental Monitoring Coordinator for specific instructions on the total number of samples to collect over the duration of the project.

1.10.2 Inorganic Composite Sample[15]

1. Assemble sample-processing equipment and supplies on a clean work surface.
2. Place all prelabeled bottles within easy reach of the churn spigot.
3. Using a clean splitter-churn, rinse it with sample water.
4. Pour the samples to be composited into the churn. There should be at least 1 - 2 L extra volume than required to fill the sample bottles.
5. Churn the composite sample at a uniform rate by raising and lowering the disk inside the churn splitter with smooth, even strokes.
   a. When churning, the disk should touch bottom on every stroke, and the stroke length should be as long as possible without breaking water surface. **Do not break the surface of the wate**r.
   b. **The churning rate should be about 9 inches per second (in/s).** If the churning rate is significantly greater than 9 in/s, or if the disk breaks the surface of the water, excessive air is introduced into the sample and could affect dissolved gases, bicarbonate, pH, and other characteristics of the sample.
   c. Inadequate churning can result in withdrawal of non-representative samples.
6. Pre-mix the composite sample by churning for about 10 strokes to uniformly disperse suspended material before subsampling.
7. Withdraw the subsamples.
   a. Withdraw an adequate volume of sample water for the field rinse while continuing to churn.
   b. Fill the sample bottle(s) by dispensing through the spigot.
   c. The first subsample withdrawn from the churn should be the largest volume required (typically, this is filling the sample bottles.
   d. Do not interrupt the churning/subsampling process, if possible. If an interruption occurs, reestablish the churning rate and remix the sample by churning ten strokes before resuming subsampling.
   e. As the volume of composite sample in the churn decreases, adjust the stroke length to maintain a churning rate of about 9 in/s and avoid breaking the surface of the water being sampled.
8. Check with Quality Assurance Project Plan or Monitoring Coordinator for specific instructions on the total number of samples to collect over the duration of the project.

1.10.3 Bacteria Sample Collection (only performed during the recreational period of May 1 to Sept. 30)

1. Label the bottle using a permanent marker. Include site name, site date and time, WBID #, sample type, and investigator initials. Refer to the Chain of Custody and Sample Labeling SOP for more instructions.
2. **If recent instream cattle activity is observed or if flow is elevated due to rain, mark "High" on the chain of custody**; both of these conditions are likely to increase the amount of bacteria present in the sample, and this label

[15] Taken directly or in part from USGS (1999) National Field Manual for the Collection of Water-Quality Data Techniques of Water-Resources Investigations, Book 9, Handbooks for Water-Resources Investigations, United States Geologic Survey, Office of Water

will indicate that a dilution should be performed to achieve a useable bacteria result instead of one that is too high to count.

3. Open a sterile, approved sampling container ("Bact-T" bottle); grasp the bottle near the base, with hand and arm on downstream side of bottle.
4. Without rinsing, plunge the bottle opening downward, below the water surface. Allow the bottle to fill with the opening pointed slightly upward into the current.
5. Fill to within ±10 mL of the 100 mL line or "EPA line" marked on the side of the bottle. Remove the bottle with the opening pointed upward from the water and tightly cap.
6. Put on ice immediately; do not submerge in ice water and; drain water from cooler as necessary.
7. Avoid direct contact with ice and sunlight.
8. Check with Quality Assurance Project Plan or Monitoring Coordinator for specific instructions on the total number of samples to collect over the duration of the project. Bacteria is only collected during the recreational season from May 1through September 30.

1.11 Sample Handling & Preservation

1.11.1 Sample Filtration

Some samples may need to be filtered depending on laboratory protocols and/or the objectives of the project. For instance, field filtration of samples is required when samples are collected for USGS and certain metal and nutrient analysis. Results from filtered samples have a different meaning than results from unfiltered samples (e.g. Dissolved Metals: Those metals dissolved in an un-acidified sample that passes through a 0.45-µM membrane filter—represents soluble metals. Total Metals: The concentration of metals determined from an unfiltered sample after rigorous digestion—represents dissolved and particulate metals.).

Filtration is done in the field using a 12 volt peristaltic pump, a battery, and a 120 mm filtering manifold. The correct filter to use is a 142 mm, 0.45µm pore size cellulose-nitrate filter. A 1µm glass fiber pre-filter may be used to speed up filtration of turbid samples but is not required.

Setup of the filtering apparatus is simple. The pump can turn in either direction so it is not important which end of the tubing is hooked up to the filter manifold. The free end of the tubing becomes the intake tube which is placed into raw sample water, the outlet is connected to the top of the filter manifold. The pump is then turned on and set to rotate in the direction that draws water in the intake and forces it through the filter. Filtered water emerges at the other side of the manifold.

Filters should be placed in the manifold according to the instructions that come with the manifold.

Procedure:

1. With filter in manifold, flush 200 mLs de-ionized water through tubing and filter. This rinses the detergent out of the filter and rinses the remains of the last sample out of the tubing and manifold.
2. Next, flush about 200 mLs of raw sample water through the system. This flushes the de-ionized water out of the system. As this initial batch of filtered sample water comes through the filter it should be caught and used to rinse out the three bottles to be filled with filtered water.
3. After the first 200 mLs is purged and the bottles rinsed, collect a sample.
4. If the filter plugs up before the bottles are all filled, the pump will need to be turned off and a new filter installed. If this happens, the new filter can be rinsed with sample water rather than de-ionized water; however this water must be discarded.
5. Fill sample bottles following the procedure for the parameters of interest. Preservative must be added after the sample has been filtered—if required (Table 1).

1.11.2 Sample Preservation

- Refer to Table 1 for specific preservation requirements.
- Metal samples should be preserved to a pH <2 using HNO_3 or if metal speciation is of concern use HCl.
- Most nutrient samples are preserved to a pH <2 with H_2SO_4.
- When acidifying samples, try to add equivalent amounts to each bottle (including blank) to maintain consistency. Use best professional judgment with selecting acid volume. Usually 1-2 mL/L should be sufficient, but certain waters may require more or less depending on alkalinity. (e.g. in general, eastern Oklahoma waters tend to be less

alkaline, while western Oklahoma waters tend to have higher alkalinity. Groundwater, mine seeps and water from limestone outcrops tend to have elevated alkalinity levels.)

- Other physical and chemical sample bottles should be stored and delivered on ice or at 4° C.
- Bacteria samples should not be allowed to float in ice water. In addition, care should be taken that other samples be kept on fresh ice—not in ice water.

1.12 Sample Preparation and Analysis

Refer to Table 1 for specific preparation requirements and holding times.

1.13 Troubleshooting

Consult with the Monitoring Coordinator.

1.14 Data Acquisition, Calculation & Data Reduction

Not applicable

1.15 Computer Hardware & Software

Not applicable

1.16 Data Management & Records Management

1.16.1 Field Notation

All QA samples need to be recorded on the **Sampling Episode Sheet** (see **SOP Appendix: Data Sheets**); including blank, split, replicate and spike information. All measurements made at each site should be recorded on the **Site Collection Sheet** (see **SOP Appendix: Data Sheets**). Data should be recorded following procedures outlined in the **Procedure for Completing Field Data Sheets SOP**.

1.16.2 Chain of Custody Procedure

Collection of inorganic sample requires the use of a Chain of Custody form. The handling of COC should follow the procedures described in the **Chain of Custody and Sample Labeling SOP**.

Table 1: Recommendation for sampling and preservation of samples[16]

PARAMETER	SAMPLE VOLUME (approximate, mL)	CONTAINER (plastic-glass)	PRETREATMENT/ PRESERVATIVE	HOLDING TIMES (recommended[1] /regulatory/OCC)
Acidity	100	P, G	Ice (4° C)	24 hr/14 days/14 days
Alkalinity	*In situ* (200)	P, G	Ice (4° C)	Stat /14 days/Stat
Ammonia	500	P, G	Ice (4° C); H_2SO_4 pH <2	7 days/28 days /28 days
Bacteria (E. Coli, fecal coliform & Enterococcus)	2-100	P, G	Ice (4° C)	6 hrs/24 hrs/48 hr[1]
Bromide	100	P, G	None required	28 days /28 days /28 days
Chloride	100	P, G	None required	28 days /28 days /28 days
Color	100	P, G	Ice (4° C)	48 hrs /48 hrs /48 hrs
Conductance, Specific	*In situ* (500)	P, G	Ice (4° C)	Stat /28 days/Stat
Fluoride	300	P	None required	28 days /28 days /28 days
Hardness	100	P, G	Ice (4° C) or (HNO_3 pH <2)[2]	6 mnths/6 mnths /6 mnths
Metals, dissolved	200	P, G	Filter 0.45 µm; HNO_3 pH <2	6 mnths/6 mnths /6 mnths
Metals, total	200	P, G	HNO_3 pH <2	6 mnths/6 mnths /6 mnths
Nitrate	100	P, G	Ice (4° C)	48 hrs/48 hrs/48 hrs
Nitrate + Nitrite	200	P, G	Ice (4° C); H_2SO_4 pH <2	28 days/28 days/28 days
Nitrite	100	P, G	Ice (4° C)	48 hrs/48 hrs/48 hrs
Organic nitrogen, TKN	1000	P, G	Ice (4° C); H_2SO_4 pH <2	7 days/28 days/7 days
Oxygen (probe)	*In situ*	-	-	Stat/NA/Stat
Oxygen (Winkler)	300	BOD bottle	Fix on site, store in dark	8 hrs/8 hrs/8hrs
pH	*In situ*	-	-	Stat/Stat/Stat
Phosphorus, ortho	100	P, G	Ice (4° C)	48 hrs/48 hrs/48 hrs
Phosphorus, total	100	P, G	Ice (4° C); H_2SO_4 pH <2	28 days/28 days/28 days
Settleable Solids	500	P, G	Ice (4° C)	48 hrs/48 hrs/48 hrs
Sulfate	100	P, G	Ice (4° C)	28 days/28 days/8 days
Solids, total dissolved	200	P, G	Ice (4° C)	7 days/7 days/7 days

[16] Adapted from EPA (1983),"Methods for Chemical Analysis of Water and Wastes".

Solids, total suspended	200	P, G	Ice (4º C)	7 days/7 days/7 days
Temperature	*In situ*	-	-	Stat/Stat/Stat
Turbidity	*In situ*	P, G	Ice (4º C)	Stat/48 hrs/Stat

In situ = in the waterbody Stat = immediately NA = not available
1 = For standard violation 6 hr. holding time is required; for OCC purposes 24 hr. is preferred but 48 hrs. is acceptable
2 = use HNO_3 only if Ca and Mg hardness is being determined via the AA

2.0 QA/QC SECTION

2.1 Training

Training of field personnel will be done through dry run exercises in the laboratory to familiarize them with instrument operation, calibration and maintenance. All operators are required to become familiar with the SOP documents. Prior to solo sample collection, field personnel are evaluated in a field setting for proper use of equipment and sample collection protocol. Annual field audits are performed on sample collectors following procedures outlined in the **Quality Management Plan**.

2.2 Maintenance

Not applicable

2.3 QC Procedures

A set of QA samples will be collected for every sampling episode or one set per 10 sampling sites (10%). The QA samples will include at a minimum Field Blanks, and Field Duplicates. If required by the QAPP, Field Spikes and/or Field replicates will be collected. Depending on the parameters being sampled, the volume of sample may vary. Check with the contracted laboratory for the required volume. For most sampling events, a 1 L sample should be sufficient for each grouping of parameters collected. That is, a 1 L blank is needed for physical properties, for nutrients, and for metals (if collected). An additional 2-3, one L bottles are required for splits, replicates, and spikes (if collected), respectively. Field blanks will consist of nano-pure deionized water, while the splits, replicates, and spikes will be taken from the stream sampling location.

3.0 REFERENCES

APHA, AWWA, and WPCF (1995) Standard Methods for the Examination of Water and Wastewater, 19th edition, eds. L.S. Clesceri, A.E. Greenberg, and R.R. Trussell, American Public Health Association, Washington, D.C.

EPA (1983) Methods for Chemical Analysis of Water and Wastes, US Environmental Protection Agency, Environmental Monitoring and Support Laboratory, Cincinnati, OH.

Csuros, M. (1994) Environmental Sampling and Analysis for Technicians, Lewis Publishers, Ann Arbor Michigan.

USGS (1999) National Field Manual for the Collection of Water-Quality Data Techniques of Water-Resources Investigations, Book 9, Handbooks for Water-Resources Investigations, United States Geologic Survey, Office of Water, Washington, D.C.

4.0 APPENDIX A

STANDARD OPERATING PROCEDURE
Field Summary

Inorganic Sample Collection

Sample Collection

Inorganic Grab Sample

1. If possible, collect from the site with the least contamination first and the most contamination last. When possible samples should be collected in reaches having uniform flow (runs), and having a uniform and stable bottom contour, and where constituents are well mixed. These areas often occur just upstream of riffles. Sampling should be sited far enough above and below confluences of streamflow or point sources of contamination to avoid sampling a cross section where flows are poorly mixed or not unidirectional. Samples should be collected in reaches upstream from bridges or other structures, to avoid contamination from the structure or from a road surface. Additionally grab samples should be collected in a reach where other data are collected (dissolved oxygen, temperature, pH, conductivity, alkalinity, hardness, turbidity, and flow).
2. Use new HDPE bottles along with caps that have a plastic foam liner to prevent leakage. Typically, one liter will be sufficient for each set of parameters run. In other words, 1 L for physical properties (TSS, TDS, Ortho-P, SO_4^{-2}, Cl^-, acidity, etc.), 1 L for nutrients, and 1 L for metals is enough for laboratory analysis and laboratory QA procedures. Depending on the method, 3780 mL (1 gallon) of sample may be required for TKN or BOD analysis. Check with the Monitoring Coordinator and/or the contracted laboratory for specific volume requirements.
3. Label the bottle using a permanent marker. Include site name, sight date and time, WBID #, sample type, and preservation method. Refer to the **Chain of Custody and Sample Labeling** SOP for more instructions.
4. Rinse the cap and bottle three times with stream water from the same part of the waterbody that will be sampled. (Vigorously shake the bottle with the rinse water inside.)
5. Take care to sample away from any sediment that may have been stirred up when collecting rinse water or making other measurements, hold the sample bottle underwater so that the mouth of the bottle is approximately 6" inches underwater—whenever possible. Invert the bottle so the neck is upright and pointing towards the water flow. Take care not to collect any surface scum. If the surface scum looks significant (i.e. floating oil and grease, a dense bloom of floating blue-green algae, etc.) be sure to note this in the field notes on the "Sampling Site" sheet.
6. If the waterbody is too shallow to hold a bottle underwater without stirring up sediment, then collect water in another clean sample container and pour it into the bottle. You may have to collect several small portions to fill one bottle. Pour the sample immediately after collection so that the solids do not have time to settle out.
7. When collecting parameters that are directly influenced by interactions with the atmosphere (pH alkalinity and some metal species), fill the bottle until no air space is left and seal the cap tightly. Check for air bubbles.
8. When collecting samples for nutrients or metals leave approximately 1% headspace (10 mL in a 1L bottle) for the addition of acid preservative. Mix thoroughly.
9. When collecting for physical and chemical parameters that do not require preservation, leave roughly 1% headspace.
10. Check with Quality Assurance Project Plan or Monitoring Coordinator for specific instructions on the total number of samples to collect over the duration of the project.

Inorganic Composite Sample[17]

1. Assemble sample-processing equipment and supplies on a clean work surface.
2. Place all prelabeled bottles within easy reach of the churn spigot.
3. Using a clean splitter-churn, rinse with sample water
4. Pour the samples to be composited into the "tank". There should be at least 1 - 2 L extra volume than required to fill the sample bottles.
5. Churn the composite sample at a uniform rate by raising and lowering the disk inside the churn splitter with smooth, even strokes.
    a. When churning, the disk should touch bottom on every stroke, and the stroke length should be as long as possible without breaking water surface. **Do not break the surface of the wate**r.

[17] Taken directly or in part from USGS (1999) National Field Manual for the Collection of Water-Quality Data Techniques of Water-Resources Investigations, Book 9, Handbooks for Water-Resources Investigations, United States Geologic Survey, Office of Water

   b. **The churning rate should be about 9 inches per second (in/s).** If the churning rate is significantly greater than 9 in/s, or if the disk breaks the surface of the water, excessive air is introduced into the sample and could affect dissolved gases, bicarbonate, pH, and other characteristics of the sample.
   c. Inadequate churning can result in withdrawal of non-representative samples.
6. Pre-mix the composite sample by churning for about 10 strokes to uniformly disperse suspended material before subsampling.
7. Withdraw the subsamples.
   a. Withdraw an adequate volume of sample water for the field rinse while continuing to churn.
   b. Fill the sample bottle(s) by dispensing through the spigot.
   c. The first subsample withdrawn from the churn should be the largest volume required.
   d. Do not interrupt the churning/subsampling process, if possible. If an interruption occurs, reestablish the churning rate and remix the sample by churning ten strokes before resuming subsampling.
   e. As the volume of composite sample in the churn decreases, adjust the stroke length to maintain a churning rate of about 9 in/s and avoid breaking the surface of the water being sampled.
8. Check with Quality Assurance Project Plan or Environmental Monitoring Coordinator for specific instructions on the total number of samples to collect over the duration of the project.

Bacteria Sample Collection (only performed during the recreational period of May 1 to Sept. 30)

1. Label the bottle using a permanent marker. Include site name, site date and time, WBID #, sample type, and investigator initials. Refer to the Chain of Custody and Sample Labeling SOP for more instructions.
2. **If recent instream cattle activity is observed or if flow is elevated due to rain, mark "High" on the chain of custody**; both of these conditions are likely to increase the amount of bacteria present in the sample, and this label will indicate that a dilution should be performed to achieve a useable bacteria result instead of one that is too high to count.
3. Open a sterile, approved sampling container ("Bact-T" bottle); grasp the bottle near the base, with hand and arm on downstream side of bottle.
4. Without rinsing, plunge the bottle opening downward, below the water surface. Allow the bottle to fill with the opening pointed slightly upward into the current.
5. Fill to with ±10 mL of the 100 mL line or "EPA line" marked on the side of the bottle. Remove the bottle with the opening pointed upward from the water and tightly cap.
6. For most collections, fill two containers at each site. Check with Quality Assurance Project Plan or Environmental Monitoring Coordinator for specific instructions on the number of samples to collect.
7. Place samples in a protective container, and store up-right (containers are leaky).
8. Put on ice immediately; do not submerge in ice water and drain water from the cooler periodically.
9. Avoid direct contact with ice and sunlight.
10. Check with Quality Assurance Project Plan or Monitoring Coordinator for specific instructions on the total number of samples to collect over the duration of the project. Bacteria is only collected during the recreational season from May 1 through September 30.

Sample Handling & Preservation

Sample Filtration

Some samples may need to be filtered depending on laboratory protocols and/or the objectives of the project. For instance, field filtration of samples is required when samples are collected for USGS and certain metal and nutrient analysis. Results from filtered samples have a different meaning than results from unfiltered samples (e.g. Dissolved Metals: Those metals dissolved in an un-acidified sample that passes through a 0.45-µM membrane filter—represents soluble metals. Total Metals: The concentration of metals determined from an unfiltered sample after rigorous digestion—represents dissolved and particulate metals).

Filtration is done in the field using a 12 volt peristaltic pump, a battery, and a 120 mm filtering manifold. The correct filter to use is a 142 mm, 0.45µm pore size cellulose-nitrate filter. A 1µm glass fiber pre-filter may be used to speed up filtration of turbid samples but is not required.

Setup of the filtering apparatus is simple. The pump can turn in either direction so it is not important which end of the tubing is hooked up to the filter manifold. The free end of the tubing becomes the intake tube which is placed into raw sample water, the outlet is connected to the top of the filter manifold. The pump is then turned on and set to rotate in the direction that draws water in the intake and forces it through the filter. Filtered water emerges at the other side of the manifold.

Filters should be placed in the manifold according to the instructions that come with the manifold.

Procedure:

1. With filter in manifold, flush 200 mLs de-ionized water through tubing and filter. This rinses the detergent out of the filter and rinses the remains of the last sample out of the tubing and manifold.
2. Next, flush about 200 mLs of raw sample water through the system. This flushes the de-ionized water out of the system. As this initial batch of filtered sample water comes through the filter it should be caught and used to rinse out the three bottles to be filled with filtered water.
3. After the first 200 mLs is purged and the bottles rinsed, collect a sample.
4. If the filter plugs up before the bottles are all filled, the pump will need to be turned off and a new filter installed. If this happens, the new filter can be rinsed with sample water rather than de-ionized water; however this water must be discarded.
5. Fill sample bottles following the procedure for the parameters of interest. Preservative must be added after the sample has been filtered—if required.

Sample Preservation

- Refer to Table 1 for specific preservation requirements.
- Metal samples should be preserved to a pH <2 using HNO_3 or if metal speciation is of concern use HCl.
- Most nutrient samples are preserved to a pH <2 with H_2SO_4.
- When acidifying samples, try to add equivalent amounts to each bottle (including blank) to maintain consistency. Use best professional judgment with selecting acid volume. Usually 1-2 mL/L should be sufficient, but certain waters may require more or less depending on alkalinity.
- Other physical and chemical sample bottles should be stored and delivered on ice or at 4° C.
- Bacteria samples should not be allowed to float in ice water. In addition, care should be taken that other samples be kept on fresh ice—not in ice water.

Table 1: Recommendation for sampling and preservation of samples[18]

PARAMETER	SAMPLE VOLUME (approximate, mL)	CONTAINER (plastic-glass)	PRETREATMENT/ PRESERVATIVE	HOLDING TIMES (recommended[1] /regulatory/OCC)
Acidity	100	P, G	Ice (4º C)	24 hr/14 days/14 days
Alkalinity	*In situ* (200)	P, G	Ice (4º C)	Stat /14 days/Stat
Ammonia	500	P, G	Ice (4º C); H_2SO_4 pH <2	7 days/28 days /28 days
Bacteria (E. Coli, fecal coliform & Enterococcus)	2-100	P, G	Ice (4º C)	6 hrs/24 hrs/48 hr[1]
Bromide	100	P, G	None required	28 days /28 days /28 days
Chloride	100	P, G	None required	28 days /28 days /28 days
Color	100	P, G	Ice (4º C)	48 hrs /48 hrs /48 hrs
Conductance, Specific	*In situ* (500)	P, G	Ice (4º C)	Stat /28 days/Stat
Fluoride	300	P	None required	28 days /28 days /28 days
Hardness	100	P, G	Ice (4º C) or (HNO_3 pH <2)[2]	6 mnths/6 mnths /6 mnths
Metals, dissolved	200	P, G	Filter 0.45 µm; HNO_3 pH <2	6 mnths/6 mnths /6 mnths
Metals, total	200	P, G	HNO_3 pH <2	6 mnths/6 mnths /6 mnths
Nitrate	100	P, G	Ice (4º C)	48 hrs/48 hrs/48 hrs
Nitrate + Nitrite	200	P, G	Ice (4º C); H_2SO_4 pH <2	28 days/28 days/28 days
Nitrite	100	P, G	Ice (4º C)	48 hrs/48 hrs/48 hrs
Organic nitrogen, TKN	1000	P, G	Ice (4º C); H_2SO_4 pH <2	7 days/28 days/7 days
Oxygen (probe)	*In situ*	-	-	Stat/NA/Stat
Oxygen (Winkler)	300	BOD bottle	Fix on site, store in dark	8 hrs/8 hrs/8hrs
pH	*In situ*	-	-	Stat/Stat/Stat
Phosphorus, ortho	100	P, G	Ice (4º C)	48 hrs/48 hrs/48 hrs
Phosphorus, total	100	P, G	Ice (4º C); H_2SO_4 pH <2	28 days/28 days/28 days
Settleable Solids	500	P, G	Ice (4º C)	48 hrs/48 hrs/48 hrs
Sulfate	100	P, G	Ice (4º C)	28 days/28 days/8 days
Solids, total dissolved	200	P, G	Ice (4º C)	7 days/7 days/7 days
Solids, total suspended	200	P, G	Ice (4º C)	7 days/7 days/7 days
Temperature	*In situ*	-	-	Stat/Stat/Stat
Turbidity	*In situ*	P, G	Ice (4º C)	Stat/48 hrs/Stat

In situ = in the waterbody
Stat = immediately
NA = not available
1 = For standard violation 6 hr holding time is required; for OCC purposes 24 hr is preferred but 48 hrs is acceptable
2 = use HNO_3 only if Ca and Mg hardness is being determined via the AA

Troubleshooting
Consult with the Environmental Monitoring Coordinator.

[18] Adapted from EPA (1983), "Methods for Chemical Analysis of Water and Wastes".

OKLAHOMA CONSERVATION COMMISSION
WATER QUALITY DIVISION

STANDARD OPERATING PROCEDURE

MACROINVERTEBRATE COLLECTION, SUBSAMPLING, AND PICKING

1.0 PROCEDURAL SECTION

1.1 Scope and Application[19,20]

Most free flowing water bodies with acceptable water quality and habitat conditions support diverse macroinvertebrate communities in which there is a reasonably balanced distribution of species among the total number of individuals present. Macroinvertebrate community responses to environmental perturbations are useful in assessing water quality and habitat impacts. The composition and density of macroinvertebrate communities in flowing water are reasonably stable from year to year. However, seasonal fluctuation associated with life-cycle dynamics of individual species may result in extreme variation at specific sites within any calendar year. Assessing the impact of pollution generally involves comparison of macroinvertebrate communities and their habitats at sites influenced by pollution with those collected from adjacent unaffected sites.

Macroinvertebrate collections, for purposes of stream assessment, are made from the community that requires or prefers flowing (lotic) water. Reasons why this community type is sampled rather than various lentic communities include:

1. The flowing water community is routinely exposed to the average water quality of the stream;
2. The metrics used to analyze the macroinvertebrate community of streams were designed for the flowing water community;
3. The database of pollution tolerance of macroinvertebrates found in Oklahoma is much larger for lotic communities; and
4. The organisms most sensitive to water quality degradation tend to live in flowing water.

Due to these factors, looking at the flowing water community is more suitable for assessing the condition of a stream than looking at the pool community where more tolerant organisms are found, regardless of the stream's water quality.

Lotic communities require a substrate of some type to attach to. The most common substrates of this type include rocky riffles, streamside vegetation/root masses, and woody debris. Where possible, a rocky riffle should be sampled. If a rocky riffle is not present, if the riffle is of dubious quality, or if rocky riffles cannot be found at <u>all</u> streams of a given ecoregion, both of the other two alternate habitats (root masses and woody debris) should be sampled. At present, it appears that the streamside vegetation is superior to woody debris for macroinvertebrates, but until that is definitely established, both should be sampled. The sampling methodology for the three habitat types is included in this SOP.

Macroinvertebrate communities are constantly changing throughout the year as species emerge and new species hatch. Consequently, it is not possible to infer water quality from the invertebrate community of a stream by comparing it to a reference stream community that was collected at a different time of year. The springtime communities are especially unstable, as many of the insects that over-winter as larvae begin to emerge. By summertime, however, the insects that only have one generation per year have mostly emerged, and the insects left are ones that hatch repeatedly throughout the summer. This period of the summer when collections from different streams can be compared to each other is termed the <u>Summer</u> <u>Index</u> <u>Period</u>.

Fall is also a poor time to collect to be used for comparing the water quality of different streams. Many insects lay eggs in the summer, and these do not hatch until the water temperature cools down. As these insects hatch and grow large enough to see, they start appearing in collections. Since they hatch at different times and grow at different rates, collections can be very different if they are sampled at different times in the fall. Wintertime communities, on the other hand, tend to be stable. Very few insects emerge in the wintertime, and Oklahoma streams stay warm enough that the invertebrates in them remain actively growing. The wintertime period in which macroinvertebrate collections from different streams can be compared to each other is called the <u>Winter</u> <u>Index</u> <u>Period</u>.

1.2 Summary of Method

A modified version of EPA Rapid Bioassessment Protocol (RBPs) was adopted for macroinvertebrate collections. As stated above, the collection methods are geared toward assessing communities that require or prefer flowing water. Lotic communities require a substrate of some type to attach to. The most common substrates encountered are rocky riffles, streamside vegetation, and woody debris. All three substrates can be sampled (when available) to provide an accurate representation of the various communities in the stream. A combination of collection techniques is used for each habitat. Organisms collected from these habitats are subsampled and sent to a professional macroinvertebrate taxonomist and enumerated to genus level, when possible.

---

[19] Text taken directly or in part from Standard Methods (APHA, AWWA, WPCF, 1995).

[20] Text taken directly or in part from Dan Butler, Senior Biologist, Oklahoma Conservation Commission (2000)

1.2.1 Definitions

- Riffle: Any sudden downward change in the level of the streambed such that the surface of the water becomes disrupted by small waves. A riffle substrate must be composed of gravel, or cobble from 1" to 12" in the longest dimension; substrates of bedrock or tight clay are not considered suitable. If composed of gravel and sand, it must be >50% gravel.
- Streamside Vegetation: Any streamside vegetation which offers fine structure for invertebrates to dwell within or upon that receives suitable flow. Most habitat is located along undercut banks where fine roots of riparian vegetation are hanging in the water.
- Woody Debris: Any dead wood with or without bark located in the stream with suitable current flowing over it.
- Summer Index Period: **June 1** to **September 15.**
- Winter Index Period: **January 1** to **March 15**

1.3 Health and Safety Warnings

- Proper precautions should be taken when handling 100% ethanol.
  - Flammable
  - Intoxicant
  - Eye irritant

1.4 Cautions

- Stream stage must not be greater than 3 cm (~1 inch) above base flow during the collection.
- Collections must be done in flowing water.
- In no case should the Mason jar be filled more than 3/4 full of loose sample.
- There should always be enough room in the jar to have at least 5 cm (~2 inch) of free ethanol over the sample.

1.5 Interference

None

1.6 Personnel Qualification

Field personal must be trained and evaluated on sample collection technique. Sample collection is subject to approval by the QA Officer and/or the Environmental Monitoring Coordinator. Training will be done through dry run exercises in the laboratory and field to familiarize field personnel with procedures and techniques.

1.7 Apparatus & Materials

- Absolute ethanol (200 proof; ~100%)
- Clean quart size Mason jars
- New mason jar lids
- Pencil & indelible marker
- 1 m^2 kick net composed of # 30 nylon mesh
- Handheld dip net composed of #30 size nylon mesh

1.8 Instrument/Method Calibration

Not applicable

1.9 Preparation

Determine if flow conditions are suitable for collection. Samples must be collected in flowing water no greater than 3 cm (~1 inch) above the seasonal base flow. After a high flow event, 5 – 7 days should lapse before a collection is made to allow the benthic organisms to return to the preferred substrate. Furthermore, collection should be delayed for two weeks after a stream has gone from no flow (interrupted, or dry conditions) to base flow conditions.

1.10 Sample Collection

There are three possible habitat types for collection. The methods for each are described below.

1.10.1 Collection of Benthic Macroinvertebrates from Rocky Riffles

- **Suitable Substrate** - A riffle is defined as any sudden downward change in the level of the streambed such that the surface of the water becomes disrupted by small waves. For this collection method the substrate of the riffle must be

composed of gravel, or cobble from 1" to 12" in the longest dimension. Riffles with substrates of bedrock or tight clay are not suitable. If the riffle substrate is composed of only gravel and sand it must contain at least 50% gravel.

- **Where to Sample the Riffle** - Three 1 m^2 areas of the riffle must be sampled. They can be square, rectangular or trapezoidal so long as each area equals 1 m^2 in area. One should be in the fastest part of the riffle where the largest rocks and the smallest amount of interstitial sediment will generally be found. The second should be in the slowest part of the riffle, often near the edge of the stream where the smallest rocks and the greatest amount of interstitial sediment will be found. The third sample should be in an area intermediate between the first two

- **Method of Collecting the Sample** - Support a 1 m^2 kick net composed of a double layer of fiberglass window screen or a net of number 30 mesh in such a way that any organisms dislodged from the substrate will be carried into it by the current. The bottom of the net should be tight against the bottom of the stream and the current must be sufficient to insure that dense organisms such as small mollusks will be carried into the net from the sampling area. There is no definite cutoff for stream velocity in the sampling area, but if possible, riffles with average velocities of 1 foot/second or greater are preferred and should be chosen if possible.

  By kicking the substrate, vigorously agitate the substrate of a 1 m^2 area of the bed of the riffle immediately upstream of the net until all rocks and sediment to a depth of at least five inches have been thoroughly disturbed. Organisms living between and upon the rocks will have been dislodged and carried into the net by the current. Any rocks too large to kick should be brushed by hand on all surfaces. This can be done using your hands or with the aid of a brush. If a brush is used, you must be very careful to clean it after each site to prevent contamination of the next sample with invertebrates from the previous site. Continue agitation and brushing until it can be seen that the area being sampled is producing no new detritus, organisms, or fine sediment.

  At this point, rinse leaves, sticks and other large debris caught in the net in the current in a manner such that organisms on them are carried into the net. When the volume of the sample is reduced so that three 1 m^2 samples will loosely fill a 1-quart mason jar three fourths (3/4) full or less, remove all of the material from the net and place it in the Mason jar. In no case should the Mason jar be filled more than 3/4 full of loose sample. Add 100% ethanol to the jar until the sample is covered and there is free ethanol on top of the sample. There should always be enough room in the jar to have at least 5 cm (2 inches) of free ethanol over the sample.

  Label the sample appropriately following the instructions presented in section 1.11 Sample Handling & Preservation.

1.10.2 Collection of Macroinvertebrates from Streamside Vegetation

- **Suitable Substrate** - Any streamside vegetation in current that offers fine structure for invertebrates to dwell within or upon is suitable. The vegetation being sampled must be in the current so that it offers suitable habitat for organisms which collect drifting particles or which need flowing water for other reasons. This habitat will often be found along the undercut banks of runs and bends where the fine roots of grasses, sedges, and trees, such as willow and sycamore, hang in the water.

- **Method of Collecting the Sample** - This type of sample should be collected with a dip net made of #30 size mesh material. The net should be placed around or immediately downstream of the vegetation being sampled. The organisms can be dislodged from the roots either by vigorously shaking the net around the roots or by shaking the roots by hand while the roots are inside the net.

- **Where and How Long to Sample** - Sampling should continue for **3 minutes** of actual root shaking. Do not count the time that elapses between sampling areas. Be careful to only sample roots in current. Usually, only one or two sides of a given root mass are in current. Be careful not to sample the backside of a root mass that is in still water.

At this point, rinse leaves, sticks and other large debris caught in the net so that organisms are not lost. When the volume of the sample is reduced so that it will loosely fill a 1-quart mason jar three fourths (3/4) full or less, remove all of the material from the net and place it in the Mason jar. In no case should the Mason jar be filled more than 3/4 full of loose sample. Add 100% ethanol to the jar until the sample is covered and there is free ethanol on top of the sample. There should always be enough room in the jar to have at least 5 cm (2 inches) of free ethanol over the sample. Label the sample appropriately following the instructions presented in section 1.11 Sample Handling & Preservation.

1.10.3 Collection of Macroinvertebrates from Woody Debris

- **Suitable Substrate** - Any dead wood with or without bark in the stream is suitable as long as it is in current fast enough to offer suitable habitat for organisms which collect drifting particles or which need flowing water for other reasons. The final sample should consist of organisms collected from an even mixture of wood of all sizes and in all stages of decay.

- **Method of Collecting the Sample** - This type of sample should be collected with a dip net made of #30 size mesh material. The net should be placed around or immediately downstream of the debris being sampled. The organisms can be dislodged from the debris either by vigorously shaking the net around the woody debris or by shaking the debris by hand while the debris is inside the net. Large logs that are too big to shake should be brushed or rubbed vigorously by hand while the net is held immediately downstream.

- **Where and How Long to Sample** - Sample for total of **5 minutes** counting only the time that debris is actually being agitated. Include as many types of debris in the sample as possible. These types often include wood that is very rotten and spongy with or without bark, wood that is fairly solid which has loose and rotten bark, wood that is solid with firmly attached bark and any combination of these states. They should range in size from 1/4" to about 8" in diameter.

After sampling, rinse leaves, sticks and other large debris caught in the net so that organisms are not lost. When the volume of the sample is reduced so that it will loosely fill a 1-quart mason jar three fourths (3/4) full or less, remove all of the material from the net and place it in the Mason jar. In no case should the Mason jar be filled more than 3/4 full of loose sample. Add 100% ethanol to the jar until the sample is covered and there is free ethanol on top of the sample. There should always be enough room in the jar to have at least 5 cm (2 inches) of free ethanol over the sample.

Label the sample appropriately following the instructions presented in section 1.11 Sample Handling & Preservation.

1.11 Sample Handling & Preservation

1. **Pack the Mason Jar Properly.** In no case should the Mason jar be filled more than 3/4 full of loose sample. Add 100% ethanol to the jar until the sample is covered and there is free ethanol on top of the sample. There should always be enough room in the jar to have at least 5 cm (2 inches) of free ethanol over the sample.
2. **Label the Sample.** The Mason jar should be labeled on the lid using a fine tip permanent ink marker (Sharpie) as described below. In addition, a small sheet of paper (approximately 2" x 2") should be filled out with the same information written in pencil and placed in the jar.

Jar Lid & Sample Insert
Site Date
Stream Name
Waterbody ID #
Site Time
Legal Description
County
Type of sample (riffle, woody, vegetation)
Sampler's Initials

3. **Complete the Chain of Custody Form (COC).** Follow the instructions in the **Chain of Custody and Sample Labeling SOP**. A new COC should be completed for each collection episode. Each substrate collection (riffle, woody, vegetation) should occupy a separate line on the COC. There should be only one box of samples per COC, i.e., one box, one COC.
4. **Transfer samples to the Macroinvertebrate Sample Custodian.** Correctly labeled macroinvertebrate samples, along with a Chain of Custody form (COC), should be transferred to the Macroinvertebrate Sample Custodian for subsampling. The box should be conspicuously labeled with COC number. Once the samples have been received and the COC signed, the field sampler should make a photocopy of the COC for their records.

1.12 Sample Preparation and Analysis

In some instances it may be necessary to drain the liquid from the sample and add fresh 100% ethanol. This is necessary when the sample contains a large amount of algae or other material with high water content or material that will rapidly become rancid. This will help preserve the morphological integrity of the invertebrates and greatly aid in taxonomic identification.

1.12.1 Subsampling and Picking of Macroinvertebrates from field Collected Samples

The waterbody assessment procedure utilized by OCC requires that a random sample of macroinvertebrates be collected, identified and enumerated, from the portion of the waterbody being assessed. In order to make this test cost effective it is not possible to identify more than about 150 organisms from each site. This procedure describes the procedure used to subsample a field-collected sample, which may contain 200-10,000 organisms.

1. **Obtain the Field Sample to be Subsampled.** The field collected macroinvertebrate samples and the original COC will be transferred to the individual(s) designated to complete the macroinvertebrate subsampling and picking. At this time a copy of the COC (signed by the subsampling designee) will be sent to the Data Manager.

   The sample will come from the field in 1-quart mason jars preserved with 100% ethanol. Mason jar lids have a sealing compound that is not particularly resilient. Care must be taken so that the lids are not damaged when they are opened or resealed. If a lid is damaged it must be replaced with a new one. Keep a fresh supply of lids handy in case this happens. If you use a new lid, label it exactly the same as the one that was originally used.

   Samples will be subsampled/picked in the order assigned on the Chain of Custody form.

2. **Decant Ethanol.** Without shaking or disturbing the contents, pour the liquid from the sample through a sieve made of #30 or finer screen. Save the ethanol to preserve the unused portion of the sample.

3. **Rinse Sample.** At this point, any silt, clay or fine sand in the sample should be GENTLY rinsed out of the sample. Be careful not to break off any of the delicate appendages that are used for identification of the animals. The sample will be easier to process if any large pieces of leaf, bark, stones, etc., are discarded. **Any material to be discarded must first be carefully rinsed within the sieve.**

4. **Prepare Sample for Picking.** Spread the sample out in a rectangular tray/pan that is divided into 28 sections of equal area. The size and shape of the divisions are not important so long as they are all equal in size. A pan with a white background may facilitate the collection since there will be a contrast between the organisms and the pan.

   A clear glass pan or baking dish can be effectively used by creating a grid system on the bottom of the pan using a permanent marker. Each square should be numbered (1-28), and a sheet of white paper can be glued or taped over the outside bottom of the pan. If very many samples will be subsampled it will be worth your time to construct a divider for the tray similar in construction to an ice cube tray divider. This will not only demarcate the subsampling squares, but it will also prevent animals from drifting from one square to another during subsampling.

5. **Remove Large Pieces of Detritus and Sediment.** Large leaves and big pieces of wood and bark should be removed. Be VERY CAREFUL to pick all macroinvertebrates off of them before discarding. At this stage, any debris removed must be viewed through a magnifying lens to ensure the removal of all small invertebrates. At this point, the material remaining in the dish should consist of a mixture of sand, fine gravel, small organic detritus, pieces of leaves < 1-2 cm wide, fine roots, algae and macroinvertebrates.

6. **Spread the Sample Out.** All detritus and sediment should be as uniformly distributed over the bottom of the dish as possible.

7. **Visually Estimate Invertebrate Density of the Sample.** Determine if the sample must be subdivided. The decision will be based on three requirements: (1) individual squares MUST have AT LEAST 3 animals in them (providing the entire sample has at least 100 animals total), (2) you MUST pick AT LEAST 5 squares, and (3) each square can have absolutely NO MORE THAN 25 animals. Simulid (blackfly) larvae are not to be counted as individuals for this purpose. That is, the density estimate should be independent of any blackfly larvae present. The goal is to have roughly 10 TO 20 ANIMALS PER SQUARE. This is a compromise between the statistical ideal of very few organisms per square and ease of subsampling where the entire sample is picked from one square. If you estimate that there are less than 200 animals in the entire sample, you should process the entire sample.

The purpose of this estimate is to make the sample statistically valid. Fewer than 80 animals does not provide a good representation of the population to draw conclusions from, and more than 130 animals biases the sample making it appear that that stream has more taxa than it really does. A total of 100 invertebrates is the absolute minimum number of individual invertebrates to pick from a sample, except when a sample contains fewer than 100. Although 80 is the minimum number of individuals for statistical analysis, it is imperative that a cushion is incorporated to allow for the potential difference in the sub-samplers count and the final count by the taxonomist. Often invertebrates are tossed out by the taxonomist due to an inability to identify individuals caused by missing or damaged body parts or other various reasons.

8. **Subdivide the Sample.** If each square is estimated to have more than 50 animals, it is important to grossly subdivide the sample prior to picking. For instance, divide the sample in half or quarters depending on the animal density. Ideally, 10 to 20 animals per square is desirable.

   For dividing in fourths, cut the sample into top and bottom halves and then into right and left halves. After dividing the sample, the four portions should appear as equal as possible in terms of the amount of detritus and sediment present. Choose one quarter by random means. For instance, flip a coin to select either the top half or the bottom half, and then flipping the coin again to select either the right or left side of the first half selected. If the sample is not too dense, that is the selected quarter has a density of 10 to 20 animals per square, then no additional subdivision is necessary. If the number of invertebrates is still too dense, divide the remaining portion in half and select one half by flipping the coin again. Continue dividing the sample until the density appears to fall in the correct range.

9. **Return the Unselected Portion(s) to the Mason Jar.** Return the unselected portion(s) of the sample to the original Mason jar and add the reserved alcohol. Be very careful to remove the entire portion of unselected subsample. A proportionately high density of small macroinvertebrates can remain hidden in the sediment and detritus.

10. **Fill the Tray About 1 to 2 cm Deep With Water.** Add enough tap water to fill the tray to a depth of 1–2 cm (~0.5 to 0.75 inches) or the depth necessary to cover all sample material (debris and invertebrates). The water aids in the subsampling process. The organisms and individual pieces of detritus do not clump together as when they are dry. If the water is run into the tray very slowly, the remaining leaves and large pieces of detritus can be rinsed and discarded.

11. **Distribute the Sample Evenly.** Make sure that all materials in the tray are evenly distributed, especially the gravel and leaves. This is most easily accomplished by gently homogenizing the sample mixture by hand in the tray and distributing the mixture evenly over the entire pan. If a divider is to be used, place it in the tray now. Once the sample has been distributed, do not move the pan. Jostling can cause the organisms to move outside of their designated square. This could lead to a sampling bias.

12. **Fill Out Macroinvertebrate Picking Data Sheet.**
    Complete the Macroinvertebrate Picking Data Sheet (see SOP Appendix: Data Sheets) as described below:

    SITE / SUBSAMPLING INFORMATION
    - **Picking Date.** The date of subsampling and picking should be recorded in MM/DD/YY format.
    - **Site Name.** The name of the site as it is written on the sample jar.
    - **WBID #.** The waterbody identification number on the sample jar
    - **Picker.** The name of the person subsampling / picking.
    - **Site Date.** The date the sample was collected.
    - **COC #.**
    - **Lab Log #.**
    - **Site Time.** Record the site time in military format. The "site time" is when initial activities began at the site.
    - **Sample Type.** Type of sample "Woody", "Vegetation", or "Riffle"
    - **Sample Description.** Exclusive of invertebrates, estimate the composition of the sample according to the following list: silt and clay, sand, fine gravel (<2mm), coarse gravel (>2mm), woody debris (twigs, bark, roots, etc.), whole leaves, rotted pieces of leaves, filamentous algae, and unidentifiable organic material. Record the percentage of each type.
    - **Proportion Picked.** Record the fraction of the sample that was placed into the tray for sampling –e.g. 1/2, 1/4, or 1/8 of the original Mason jar sample. This is important because the density calculations depend on this number.

- **Square # / # Organisms.** List the number of the square that was picked on the lab notebook along with the number of organisms that were picked from that square.
- **Total Number of Organisms.** Record the sum total of organisms from all squares picked. This number is not used in the calculation of the IBI scores, but provides an estimate of the total number of organisms.

INFORMATION TO INCLUDE	SAMPLE NOTEBOOK PAGE						
Subsampling Date	11/18/99						
Site Date	07/16/99						
Stream Name	Griever Creek						
Site Time	13:30						
Legal Description & County	E 9 T22N R15W, Major County						
WBID #	OK620920-01-0130g						
COC #	COC# 1772						
Sampling Type	Riffle kick						
Sample Description	40%fine gravel	10% film. algae	30% well-rotted leaves				
	10% whole leaves	5% woody debris	5% coarse gravel				
Amount of Sample Picked	¼ of the original sample was prepared for picking						
Squares Picked	Square #	1	12	3	23	28	10
# of animals found in each square	# picked	15	27	10	18	8	24
Subsampler's name	John Hassell						

13. **Randomly Select Squares.** Using some method to generate a series of random numbers (random number generator or number table), select at least 6 squares. The random number generators found on most pocket calculators or the Excel spreadsheet function will give a series of three digit numbers—usually >0 but <1. For OCC purpose, use only the last two numbers. Starting with the first random number generated, record all numbers between 01 and 28 until there are 6. These numbers represent the numbered squares to pick. Picking must follow the order in which the number were generated.

14. **Confine the Organisms to the Selected Square.** Place rectangles or squares constructed of clear plastic or other material that are the same or greater height as the water in each square. This will keep the organisms from drifting out of the squares during the picking process. If a large piece of detritus (leaves, roots, algae masses) crosses the boundary of two or more squares, it may be sliced along the edge of the square so it is contained with the boundary of the selected square.

    If there are any organisms that cross square boundaries, do not cut them. Place them in the square in which their head is already lying.

15. **Pick <u>All</u> the Invertebrates Out of the First Square Selected.** Locate and collect all the organisms in the selected square. Keep track of the number of non-blackfly organisms picked. Place the organisms picked in a scintillation vial that is filled up to the neck with 70-100% ethanol. If any large organisms (that are too big to fit in the vial with the other organisms) are picked such as crayfish or hellgrammites, place them in a separate vial. If there is some question if something is an organism, place it in the vial but <u>DO NOT COUNT</u> it as part of the total. Place five (5) blackflies and five (5) scuds in the vial but <u>DO NOT COUNT</u> them as part of the total. Pickers should be trained to identify blackfly larval forms—if the picker cannot identify blackflies, they should not be subsampling without further training. Note the general abundance of blackflies and scuds in the comments.

    When all of the organisms are picked out of the square, record the number of non-blackflies/scuds that were picked from that square under the number of that square.

16. **Continue to Pick Squares Until 100 Organisms Have Been Collected.** Using the random number list, continue to select squares until 100 (non-blackfly) animals have been collected. Once a square has been started, all of the animals must be collected from that square. A subsample will typically have 100-130 organisms / vial. If there are more than

130, the sample was not properly subdivided. If the sample has more than 150 organisms in it, it must be mixed back in with the rest of the "unpicked sample" and re-picked. If the finished invertebrate sample has less than 100 organisms in it and there is unpicked sample available, add all of the picked sample (debris and invertebrates) back to the unpicked sample portion and begin the process again with the full sample. The ONLY time that it is acceptable to have a sample with less than 100 organisms is when the entire mason jar of material has been picked. All other samples containing less than 100 invertebrates will be rejected as data with bad QA/QC.

17. **Label the Vial(s).** Using a pencil and a fine point permanent ink marker, label the vial. The top and side of the vial should both be labeled.

    The vial should be labeled IN PENCIL on waterproof paper taped to the vial after labeling with the following information:
    - Stream name
    - WBID #
    - Site date
    - Site time
    - Legal location and County
    - Type of sample (riffle, woody, vegetation)
    - Number of vials for this sample (e.g. 1 of x, where x = total number vials for one site (Mason jar))

    The cap should be labeled IN PERMANENT INK with the following information:
    - Stream name
    - WBID #
    - Site date
    - Time
    - Type of collection
    - Number of vials for this sample

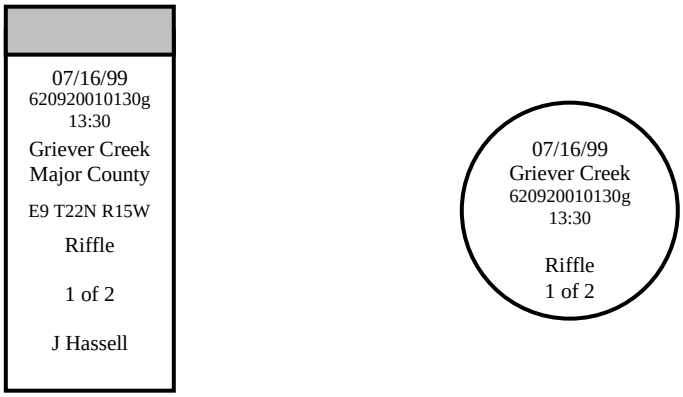

Scintillation Vial Scintillation Vial Cap

Figure 1: Example label for bug picking sample.

18. **Place Clear Tape Over the Label.** To protect the pencil-written label from wear, place clear tape (scotch tape) over the writing.

19. **Transfer Picked Samples to the Taxonomist**. Once macroinvertebrate samples have been picked and placed in properly labeled scintillation vials, the vials and the original COC will be transferred to the laboratory for taxonomic identification. At this point, a copy of the COC should be forwarded to the Data Manager with the signature of the taxonomist. The original COC will be returned to the Data Manager by the taxonomist or laboratory custodian.

20. **Archive Remaining Sample.** The remainder of the field collected macroinvertebrate samples (un-picked) should be delivered to the OCC designee for archive purposes. The COC number should be conspicuously labeled on the end of the box.

1.13 Troubleshooting

Consult with the Environmental Monitoring Coordinator

1.14 Data Acquisition, Calculation & Data Reduction

Not applicable

1.15 Computer Hardware & Software

Not applicable

1.16 Data Management & Records Management

1.16.1 Field Notation

A duplicate sample should be collected for every 10 sampling sites and noted on the **Sampling Episode Sheet** (see **SOP Appendix: Data Sheets**). All measurements and observations made at each site should be recorded on the **Site Collection Sheet** (see **SOP Appendix: Data Sheets**). Data should be recorded following procedures outlined in the **Procedure for Completing Field Data Sheets SOP**.

1.16.2 Habitat Form

Regardless of the habitat sampled, a **Macroinvertebrate Habitat Assessment Sheet** (see **SOP Appendix: Data Sheets**) must be filled out at each collection site.

The following bullets describe how to fill out the Macroinvertebrate Habitat Sheet:

DATA SHEET HEADER INFORMATION:

- SITE NAME: Record the stream name from the USGS 7-1/2' map name. If a county map, soil map, or other map has a different name, the USGS 7-1/2' map takes precedence. If a stream is unnamed on the USGS map, but named on another map, use that name, but write the name of the map in parentheses beside the stream name.
- WBID #: Record the Water Body Identification number.
- LEAD INVESTIGATOR: Record the name of the person responsible for data custody and reporting
- DATE: Record the site date in MM/DD/YR format
- TIME: Record the site time in military format. The "site time" is when initial activities began at the site. The site time should be the same on all forms associated with this site.

The form is broken into three columns, one for each habitat type (riffle, streamside vegetation and woody debris). Fill out the appropriate information for each habitat type collected. If one or two of the three sample types are not collected, write "not collected" above the habitat type.

RIFFLE

- % of SAMPLE COLLECTED Usually all of the sample collected will fit in a one quart mason jar (3/4 full). If the sample will not fit, even after removing leaves, rocks, and sticks, without overfilling the jar, mix the sample until all the components (algae, leaves, twigs, rocks, sand, etc.) appear to be uniformly mixed and discard enough of it so that the remainder will fit without over packing the jar. Write down the % of sample you estimate that you have placed in the jar

- UNIT of EFFORT: Refers to the area of riffle sampled. Three 1 m^2 samples should be collected. Record the area sampled.

- EMBEDDEDNESS: This quantifies the amount of silt, clay and sand that has been **DEPOSITED IN RIFFLES.** If there is no fine material surrounding the cobble and gravel of riffles, and there is at least some free space under the rocks, that is 0 percent embedded. If the free space under the rocks is filled but the sides are untouched, count that as 5 percent embedded. As the level of fines rises up the cobble sides, estimate the percentage of the total height of the cobbles that is covered. This is the embeddedness estimate. You can often see this line quite distinctly if you lift the rocks out of the water.

- CPOM in SAMPLE: "Coarse Particulate Organic Matter" Refers to the % of sample composed of partially or well-rotted plant material not counting the substrate being sampled. This should mostly be composed of leaf material. Do not count freshly fallen leaves that have not started to rot. Circle the appropriate number.
  1. Absent 0%
  2. Sparse > 0% but < 5%
  3. Moderate 5% to 25%
  4. Abundant > 25%

- SUBSTRATE TYPE & %: This is an approximate classification of the riffle substrate <u>where the collection is being made</u>. Estimate the proportion each type comprises of the entire substrate. The total of all substrate components should add up to 100%.
  1. Silt & Clay Refers to loose particles < 0.05 mm.
  2. Sand Refers to particles 0.1 to 2 mm is size.
  3. Gravel Refers to particles 2 to 50 mm is size.
  4. Cobble Refers to particles 50 to 250 mm is size.
  5. Boulder Refers to particles >250 mm is size.
  6. Bedrock Refers to rock that is attached to the earth's crust. If a rock can be moved by any means, it is not bedrock.
  7. Hard Pan Clay Refers to a smooth (relatively) surface of clayey material, firm to hard that is moderately resistant to erosion, and provides stable habitat.

- SUBSTRATE ROUGHNESS: Refers to the roughness of the rocks in the riffle. If you can easily assign the riffle to one of these categories by a visual estimate of the roughness no scraping is necessary. If you are not sure, pick up a typical rock and scrape it with a pocketknife. Circle the appropriate number.
  1. Low >75% of the visible periphyton is removed when scraped with a pocketknife or spatula.
  2. Moderate 25 to 75% of the visible periphyton is removed when scraped with a pocketknife or spatula.
  3. High <25% of the visible periphyton is removed when scraped with a pocketknife or spatula.

- VELOCITY TYPICAL MAX: This is an estimate of the average velocity of the habitat sampled in the fastest part of the stream. In a riffle this would be the thalweg. This velocity can be estimated using a floating object and a watch. Circle the appropriate number.
  1. Low (0.2-0.5 FPS; 0.061-0.15 MPS) FTS = feet/second; MPS = meters/second
  2. Moderate (0.5-1 FPS; 0.152-0.305 MPS)
  3. High (>1 FPS; 0.305 MPS)

- NON-FILAMENTOUS ALGAE: Refers to the areal percent of the substrate sampled which is covered with algae that lacks a stringy appearance. Circle the appropriate number.
  1. Sparse When rocks, bedrock, limbs, trash, etc., are free of attached algae or have only a thin film of greenish or brownish algae that cannot be measured by holding a ruler perpendicular to the surface of the submerged object.
  2. Moderate When the submerged surfaces have a slight fuzzy or blanketed appearance. The thickness of the attached algae does not exceed 5mm.
  3. Abundant Submerged surfaces have a definite fuzzy or blanketed (covered with gelatinous mat) appearance. The thickness of attached growth exceeds 5mm.

- FILAMENTOUS ALGAE: Refers to the areal percent of the substrate sampled which is covered with algae that is hair-like or stringy in appearance. Circle the appropriate number.
  1. Absent 0%
  2. Sparse > 0% but < 5%
  3. Moderate 5% to 25%
  4. Abundant > 25%

- AQUATIC MOSS: Refers to the areal percent of the substrate sampled which is covered with aquatic moss. Circle the appropriate number.
  1. Absent 0%
  2. Sparse > 0% but < 5%
  3. Moderate 5% to 25%
  4. Abundant > 25%

STREAMSIDE VEGETATION

- % of SAMPLE COLLECTED Usually all of the sample collected will fit in a one quart mason jar. If the sample will not fit, even after removing leaves and sticks, without overfilling the jar, mix the sample until all the components (algae, leaves, twigs, rocks, sand, etc.) appear to be uniformly mixed and discard enough of it so that the remainder will fit without over packing the jar. Write down the % of the total sample that is placed in the jar

- UNIT of EFFORT: Refers to the amount of time the vegetation was agitated. The collection should proceed for **3** minutes. Record the actual time of collection in minutes.

- CPOM in SAMPLE: "Coarse Particulate Organic Matter" Refers to the % of sample composed of partially or well-rotted plant material not counting the substrate being sampled. This should mostly be composed of leaf material. Do not count freshly fallen leaves that have not started to rot. Circle the appropriate number.
  1. Absent 0%

2. Sparse > 0% but < 5%
3. Moderate 5% to 25%
4. Abundant > 25%

- PRESENCE: Refers to the amount of suitable streamside vegetation habitat present in the stream. Circle the appropriate number.
  1. Occasional Indicates that you must walk more than 50 meters to get a good 3-minute sample.
  2. Common Indicates that you must walk 10 to 50 meters to get your sample.
  3. Abundant Indicates that a good sample can be collected in less than 10 meters of stream.

- TYPE: Refers to the type of streamside vegetation sampled. Circle <u>all</u> that makes up at least ¼ of the total habitat sampled.
  1. Grass-like Leaves Leaves of aquatic or semi aquatic grasses & sedges which have been hanging in the water long enough to develop a periphyton and/or slime coat.
  2. Fine Roots Root masses where most of the roots are <2 mm in diameter.
  3. Coarse Roots Root masses where most of the roots are >2 mm but <6 mm in diameter.
  4. *Ludwigia* Stems Stream macrophyte—not suitable habitat.

- VELOCITY TYPICAL MAX: This is an estimate of the average velocity of the habitat sampled in the fastest part of the stream. For streamside vegetation it would be on the outside (streamside) edge of the root mass. This velocity can be estimated using a floating object and a watch.
  1. Low 0.2 to 0.5 ft/sec
  2. Medium 0.5 to 1.0 ft/sec
  3. High >1.0 ft/sec.

- NON-FILAMENTOUS ALGAE: Refers to the areal percent of the substrate sampled which is covered with algae that are not stringy in appearance. Circle the appropriate number.
  1. Sparse When rocks, bedrock, limbs, trash, etc., are free of attached algae or have only a thin film of greenish or brownish algae that cannot be measured by holding a ruler perpendicular to the surface of the submerged object.
  2. Moderate When the submerged surfaces have a slight fuzzy or blanketed appearance. The thickness of the attached algae does not exceed 5mm.
  3. Abundant Submerged surfaces have a definite fuzzy or blanketed (covered with gelatinous mat) appearance. The thickness of attached growth exceeds 5mm.

- FILAMENTOUS ALGAE: Refers to the areal, percent of the substrate sampled which is covered with algae that is hair-like or stringy in appearance. Circle the appropriate number.
  1. Absent 0%
  2. Sparse > 0% but < 5%
  3. Moderate 5% to 25%
  4. Abundant > 25%

WOODY DEBRIS

- % of SAMPLE COLLECTED Usually all of the sample collected will fit in a one quart mason jar. If the sample will not fit, even after removing leaves and sticks, without overfilling the jar, mix the sample until all the components (algae, leaves, twigs, rocks, sand, etc.) appear to be uniformly mixed and discard enough of it so that the remainder will fit without over packing the jar. Write down the % of sample you estimate that you have placed in the jar

- UNIT of EFFORT: Refers to the amount of time the vegetation was agitated. The collection should proceed for **5** minutes. Record the actual time of collection in minutes.

- CPOM in SAMPLE: "Coarse Particulate Organic Matter" Refers to the % of sample composed of partially or well-rotted plant material not counting the substrate being sampled.

This should mostly be composed of leaf material. Do not count freshly fallen leaves that have not started to rot. Circle the appropriate number.

1. Absent 0%
2. Sparse > 0% but < 5%
3. Moderate 5% to 25%
4. Abundant > 25%

- PRESENCE: Refers to the amount of suitable woody debris habitat present in the stream. Circle the appropriate number.
  1. Occasional Indicates that you must walk more than 50 meters to get a good 3-minute sample.
  2. Common Indicates that you must walk 10 to 50 meters to get your sample.
  3. Abundant Indicates that a good sample can be collected in less than 10 meters of stream.

- SIZE: Refers to the average diameter of the woody debris sampled. Check all lines where that size class makes up at least 1/4 of the habitat sampled.
  1. Small 0.6 to 2.0 cm
  2. Medium 2.0 to 7.5 cm
  3. Large >7.5 cm

- STATE OF DECAY: Refers to the state of decay of the woody debris sampled. Circle all that apply where debris of this type makes up at least ¼ of the habitat sampled. All of these categories may or may not have bark on them. These categories are determined by firmly pressing your thumbnail into the wood (not bark) of the debris sampled perpendicular to the grain. The depth of the indentation, if any that remains when your thumbnail is removed is measured to determine the state of decay.
  1. Low Indentation is 0 to 0.5 mm deep
  2. Moderate Indentation is 0.5 to 2 mm deep
  3. High Indentation is > 2 mm deep

- VELOCITY TYPICAL MAX: This is an estimate of the average velocity of the habitat sampled in the fastest part of the stream. For woody debris, it would be the average velocity of the water passing over the sides of the wood. This velocity can be estimated using a floating object and a watch.
  1. Low 0.2 to 0.5 ft/sec
  2. Medium 0.5 to 1.0 ft/sec
  3. High >1.0 ft/sec.

- NON-FILAMENTOUS ALGAE: Refers to the areal percent of the substrate sampled which is covered with algae that are not stringy in appearance. Circle the appropriate number.
  1. Sparse When rocks, bedrock, limbs, trash, etc., are free of attached algae or have only a thin film of greenish or brownish algae that cannot be measured by holding a ruler perpendicular to the surface of the submerged object.
  2. Moderate When the submerged surfaces have a slight fuzzy or blanketed appearance. The thickness of the attached algae does not exceed 5mm.
  3. Abundant Submerged surfaces have a definite fuzzy or blanketed (covered with gelatinous mat) appearance. The thickness of attached growth exceeds 5mm.

- FILAMENTOUS ALGAE: Refers to the areal percent of the substrate sampled which is covered with algae that is hair-like or stringy in appearance. Circle the appropriate number.
  1. Absent 0%
  2. Sparse > 0% but < 5%
  3. Moderate 5% to 25%
  4. Abundant > 25%

COMMENTS Record any useful information that provides insight to the sample collection process, conditions, or miscellaneous information.

1.16.3 Chain of Custody Procedure

Collection of inorganic sample requires the use of a Chain of Custody form (COC). The handling of COC should follow the procedures described in the **Chain of Custody and Sample Labeling SOP.** The manifest is routed as follows:

1. Macroinvertebrate samples are collected in the field and the COC is completed and signed by the field personnel involved with collection.
2. Samples are submitted to the Macroinvertebrate Sample Custodian. That person signs the COC and forwards a copy to Data Manager or logs the information on the web page.
3. Samples are assigned to subsampling/picking personnel for processing. They must sign the COC.
4. Processed samples are sent to the taxonomist for identification. The taxonomist must sign the COC. The person who sends the samples to the taxonomist, forwards a copy of the COC to the Data Manager.
5. After identification, the taxonomic identification sheets will be forwarded with the signed COC to the Data Manager. The laboratory will include the laboratory tracking or log numbers used to reference the identification sheet.

2.0 QA/QC SECTION

2.1 Training

Training of field personnel will be done through dry run exercises in the laboratory to familiarize them with instrument operation, calibration and maintenance. All operators are required to become familiar with the SOP documents. Prior to solo sample collection, subsampling or picking, personnel are evaluated in for proper use of equipment and sample collection protocol. Annual audits are performed on sample collectors following procedures outlined in the **Quality Management Plan**.

2.2 Maintenance

Not applicable

2.3 QC Procedures

A set of field QA samples will be collected for every sampling episode or one set per 10 sampling sites (10%). The QA samples will include at a minimum a Field Replicate. Spatial replicates should be obtained by implementing the aforementioned sampling procedures upstream of the sampling site being careful to sample with equal effort a similar composition of habitat to the original sampling site. If required by the QAPP, Field Splits will be collected. Subsampling and picking QA/QC is the responsibility of the contracted facility. The OCC will evaluate QA/QC procedures through blind checks and spot inspections.

3.0 REFERENCES

APHA, AWWA, and WPCF (1995) Standard Methods for the Examination of Water and Wastewater, 19th edition, eds. L.S. Clesceri, A.E. Greenberg, and R.R. Trussell, American Public Health Association, Washington, D.C.

Butler, D., (1999) Personal Communication, Senior Biologist, Oklahoma Conservation Commission, Oklahoma City, OK.

4.0 APPENDIX A

STANDARD OPERATING PROCEDURE
Field Summary

Summary of Method
A modified version of EPA Rapid Bioassessment Protocol (RBPs) was adopted for macroinvertebrate collections. As stated above, the collection methods are geared toward assessing communities that require or prefer flowing water. Lotic communities require a substrate of some type to attach to. The most common substrates encountered are rocky riffles, streamside vegetation, and woody debris. All three substrates can be sampled (when available) to provide an accurate representation of the various communities in the stream. A combination of collection techniques is used for each habitat. Organisms collected from these habitats are subsampled and sent to a professional macroinvertebrate taxonomist and enumerated to genus level, when possible.

Definitions

- Riffle: Any sudden downward change in the level of the streambed such that the surface of the water becomes disrupted by small waves. A riffle substrate must be composed of gravel, or cobble from 1" to 12" in the longest dimension; substrates of bedrock or tight clay are not considered suitable. In riffle with sand & gravel, it must contain >50% gravel.
- Streamside Vegetation: Any streamside vegetation which offers fine structure for invertebrates to dwell within or upon that receives suitable flow. Most habitat is located along undercut banks where fine roots of riparian vegetation are hanging in the water.
- Woody Debris: Any dead wood with or without bark located in the stream with suitable current flowing over it.
- Summer Index Period: **June 1** to **September 15.**
- Winter Index Period: **January 1** to **March 15**

Health and Safety Warnings

- Proper precautions should be taken when handling 100% ethanol.

Cautions

- In no case should the Mason jar be filled more than 3/4 full of loose sample.
- There should always be enough room in the jar to have at least 5 cm (~2 inch) of free ethanol over the sample.
- Collections must be done in flowing water
- Stream stage must not be greater than 3 cm (~1 inch) above base flow during collection.

Collection of Benthic Macroinvertebrates from Rocky Riffles

- **Suitable Substrate -** A riffle is defined as any sudden downward change in the level of the streambed such that the surface of the water becomes disrupted by small waves. For this collection method the substrate of the riffle must be composed of gravel, or cobble from 1" to 12" in the longest dimension. Riffles with substrates of bedrock or tight clay are not suitable. If the riffle substrate is composed of only sand and gravel it must contain at least 50% gravel.

- **Where to Sample the Riffle -** Three 1 m^2 areas of the riffle must be sampled. They can be square, rectangular or trapezoidal so long as each area equals 1 m^2 in area. One should be in the fastest part of the riffle where the largest rocks and the smallest amount of interstitial sediment will generally be found. The second should be in the slowest part of the riffle, often near the edge of the stream where the smallest rocks and the greatest amount of interstitial sediment will be found. The third sample should be in an area intermediate between the first two

- **Method of Collecting the Sample -** Support a 1 m^2 kick net composed of a double layer of fiberglass window screen or a net of number 30 mesh in such a way that any organisms dislodged from the substrate will be carried into it by the current. The bottom of the net should be tight against the bottom of the stream and the current must be sufficient to insure that dense organisms such as small mollusks will be carried into the net from the sampling area. There is no definite cutoff for stream velocity in the sampling area, but if possible, riffles with average velocities of 1 foot/second or greater are preferred and should be chosen if possible.
  By kicking the substrate, vigorously agitate the substrate of a 1 m^2 area of the bed of the riffle immediately upstream of the riffle until all rocks and sediment to a depth of at least five inches have been thoroughly scraped against each other.

Organisms living between and upon the rocks will have been dislodged and carried into the net by the current. Any rocks too large to kick should be brushed by hand on all surfaces. This can be done using your hands or with the aid of a brush. If a brush is used, you must be very careful to clean it after each site to prevent contamination of the next sample with invertebrates from the previous site. Continue agitation and brushing until it can be seen that the area being sampled is producing no new detritus, organisms, or fine sediment.

At this point, rinse leaves, sticks and other large debris caught in the net in the current in a manner such that organisms on them are carried into the net. When the volume of the sample is reduced so that three 1 m^2 samples will loosely fill a 1 quart mason jar three fourths (3/4) full or less, remove all of the material from the net and place it in the Mason jar. In no case should the Mason jar be filled more than 3/4 full of loose sample. Add 100% ethanol to the jar until the sample is covered and there is free ethanol on top of the sample. There should always be enough room in the jar to have at least 2 inches (5 cm) of free ethanol over the sample.

Label the sample appropriately following the instructions presented in section 1.11 Sample Handling & Preservation.

Collection of Macroinvertebrates from Streamside Vegetation

- **Suitable Substrate** - Any streamside vegetation in current that offers fine structure for invertebrates to dwell within or upon is suitable. The vegetation being sampled must be in the current so that it offers suitable habitat for organisms which collect drifting particles or which need flowing water for other reasons. This habitat will often be found along the undercut banks of runs and bends where the fine roots of grasses, sedges, and trees, such as willow and sycamore, hang in the water.

- **Method of Collecting the Sample** - This type of sample should be collected with a dip net made of #30 size mesh material. The net should be placed around or immediately downstream of the vegetation being sampled. The organisms can be dislodged from the roots either by vigorously shaking the net around the roots or by shaking the roots by hand while the roots are inside the net.

- **Where and How Long to Sample** - Sampling should continue for **3 minutes** of actual root shaking. Do not count the time that elapses between sampling areas. Be careful to only sample roots in current. Usually, only one or two sides of a given root mass are in current. Be careful not to sample the backside of a root mass that is in still water.

  At this point, rinse leaves, sticks and other large debris caught in the net so that organisms are not lost. When the volume of the sample is reduced so that it will loosely fill a 1-quart mason jar three fourths (3/4) full or less, remove all of the material from the net and place it in the Mason jar. In no case should the Mason jar be filled more than 3/4 full of loose sample. Add 100% ethanol to the jar until the sample is covered and there is free ethanol on top of the sample. There should always be enough room in the jar to have at least 2 inches (5 cm) of free ethanol over the sample.

  Label the sample appropriately following the instructions presented in section 1.11 Sample Handling & Preservation.

Collection of Macroinvertebrates from Woody Debris

- **Suitable Substrate** - Any dead wood with or without bark in the stream is suitable as long as it is in current fast enough to offer suitable habitat for organisms which collect drifting particles or which need flowing water for other reasons. The final sample should consist of organisms collected from an even mixture of wood of all sizes and in all stages of decay.

- **Method of Collecting the Sample** - This type of sample should be collected with a dip net made of #30 size mesh material. The net should be placed around or immediately downstream of the debris being sampled. The organisms can be dislodged from the debris either by vigorously shaking the net around the woody debris or by shaking the debris by hand while the debris is inside the net. Large logs that are too big to shake should be brushed or rubbed vigorously by hand while the net is held immediately downstream.

- **Where and How Long to Sample** - Sample for total of **5 minutes** counting only the time that debris is actually being agitated. Include as many types of debris in the sample as possible. These types often include wood that is very rotten and spongy with or without bark, wood that is fairly solid which has loose and rotten bark, wood that is solid with firmly attached bark and any combination of these states. They should range in size from 1/4" to about 8" in diameter.

After sampling, rinse leaves, sticks and other large debris caught in the net so that organisms are not lost. When the volume of the sample is reduced so that it will loosely fill a 1-quart mason jar three fourths (3/4) full or less, remove all of the material from the net and place it in the Mason jar. In no case should the Mason jar be filled more than 3/4 full of loose sample. Add 100% ethanol to the jar until the sample is covered and there is free ethanol on top of the sample. There should always be enough room in the jar to have at least 2 inches (5 cm) of free ethanol over the sample.

Label the sample appropriately following the instructions presented in section 1.11 Sample Handling & Preservation.

Sample Handling & Preservation

1. **Pack the Mason Jar Properly.** In no case should the Mason jar be filled more than 3/4 full of loose sample. Add 100% ethanol to the jar until the sample is covered and there is free ethanol on top of the sample. There should always be enough room in the jar to have at least 2 inches (5 cm) of free ethanol over the sample.

2. **Label the Sample.** The Mason jar should be labeled on the lid using a fine tip permanent ink marker (Sharpie) as described below. In addition, a small sheet of paper (approx. 2" x 2") should be filled out with the same information written in pencil and placed in the jar.

Jar Lid & Sample Insert
Site Date
Stream Name
Waterbody ID #
Site Time
Legal Description
County
Type of sample (riffle, woody, vegetation)
Sampler's Initials

3. **Complete the Chain of Custody.** Follow the instructions in the Chain of Custody and Sample Labeling SOP. A new COC should be completed for each collection episode. Each substrate collection (riffle, woody, vegetation) should occupy a separate line on the COC. There should be only one box of samples per COC, i.e., one box, one COC.

4. **Transfer samples to the Macroinvertebrate Sample Custodian.** Correctly labeled macroinvertebrate samples, along with a Chain of Custody form, should be transferred to the Macroinvertebrate Sample Custodian (Nathan Carter) for subsampling. The box should be conspicuously labeled with Chain of Custody number. Once the samples have been received and the Chain of Custody signed, the field sampler should make a photocopy of the Chain of Custody form for their records.

5. A duplicate sample should be collected and noted on the **Sampling Episode Sheet** (see SOP Appendix: Data Sheets). All measurements and observations made at each site should be recorded on the **Site Collection Sheet** and on the **Macroinvertebrate Habitat Sheet.**

Instructions for filling out the Macroinvertebrate Habitat Sheet

DATA SHEET HEADER INFORMATION:

- SITE NAME: Record the stream named from the USGS 7-1/2' map name. If a county map, soil map, or other map has a different name, the USGS 7-1/2' map takes precedence. If a stream is unnamed on the USGS map, but named on another map, use that name, but write the name of the map in parentheses beside the stream name.
- WBID #: Record the Water Body Identification number.
- LEAD INVESTIGATOR: Record the name of the person responsible for data custody and reporting
- DATE: Record the site data in MM/DD/YR format

- TIME: Record the site time in military format. The "site time" is when initial activities began at the site. The site time should be the same on all forms associated with this site.

The form is broken into three columns, one for each habitat type (riffle, streamside vegetation and woody debris). Fill out the appropriate information for each habitat type collected. If one or two of the three sample types are not collected, write "not collected" above the habitat type.

RIFFLE

- % of SAMPLE COLLECTED Usually all of the sample collected will fit in a one quart mason jar (3/4 full). If the sample will not fit, even after removing leaves, rocks, and sticks, without overfilling the jar, mix the sample until all the components (algae, leaves, twigs, rocks, sand, etc.) appear to be uniformly mixed and discard enough of it so that the remainder will fit without over packing the jar. Write down the % of sample you estimate that you have placed in the jar

- UNIT of EFFORT: Refers to the area of riffle sampled. Three 1 m^2 samples should be collected. Record the area sampled.

- CPOM in SAMPLE: "Coarse Particulate Organic Matter" Refers to the % of sample composed of partially or well-rotted plant material not counting the substrate being sampled. This should mostly be composed of leaf material. Do not count freshly fallen leaves that have not started to rot. Circle the appropriate number.
  1. Absent 0%
  2. Sparse > 0% but < 5%
  3. Moderate 5% to 25%
  4. Abundant > 25%

- EMBEDDEDNESS: This quantifies the amount of silt, clay and sand that has been **DEPOSITED IN RIFFLES.** If there is no fine material surrounding the cobble and gravel of riffles, and there is at least some free space under the rocks, that is 0 percent embedded. If the free space under the rocks is filled but the sides are untouched, count that as 5 percent embedded. As the level of fines rises up the cobble sides, estimate the percentage of the total height of the cobbles that is covered. This is the embeddedness estimate. You can often see this line quite distinctly if you lift the rocks out of the water.

- SUBSTRATE TYPE & %: This is an approximate classification of the riffle substrate <u>where the collection is being made</u>. Estimate the proportion each type comprises of the entire substrate. The total of all substrate components should add up to 100%.
  1. Silt & Clay Refers to loose particles < 0.05 mm.
  2. Sand Refers to particles 0.1 to 2 mm is size.
  3. Gravel Refers to particles 2 to 50 mm is size.
  4. Cobble Refers to particles 50 to 250 mm is size.
  5. Boulder Refers to particles >250 mm is size.
  6. Bedrock Refers to rock that is attached to the earth's crust. If a rock can be moved by any means, it is not bedrock.
  7. Hard Pan Clay Refers to a smooth (relatively) surface of clayey material, firm to hard that is moderately resistant to erosion, and provides stable habitat.

- SUBSTRATE ROUGHNESS: Refers to the roughness of the rocks in the riffle. If you can easily assign the riffle to one of these categories by a visual estimate of the roughness no scraping is necessary. If you are not sure, pick up a typical rock and scrape it with a pocketknife. Circle the appropriate number.
  1. Low >75% of the visible periphyton is removed when scraped with a pocketknife or spatula.

2. Moderate — 25 to 75% of the visible periphyton is removed when scraped with a pocketknife or spatula.
3. High — <25% of the visible periphyton is removed when scraped with a pocketknife or spatula.

- VELOCITY TYPICAL MAX: This is an estimate of the average velocity of the habitat sampled in the fastest part of the stream. In a riffle this would be the thalweg. This velocity can be estimated using a floating object and a watch. Circle the appropriate number.
  1. Low — (0.2-0.5 FPS; 0.061-0.15 MPS) FTS = feet/second; MPS = meters/second
  2. Moderate — (0.5-1 FPS; 0.152-0.305 MPS)
  3. High — (>1 FPS; 0.305 MPS)

- NON-FILAMENTOUS ALGAE: Refers to the areal percent of the substrate sampled which is covered with algae that are not stringy in appearance. Circle the appropriate number.
  1. Sparse — When rocks, bedrock, limbs, trash, etc., are free of attached algae or have only a thin film of greenish or brownish algae that cannot be measured by holding a ruler perpendicular to the surface of the submerged object.
  2. Moderate — When the submerged surfaces have a slight fuzzy or blanketed appearance. The thickness of the attached algae does not exceed 5mm.
  3. Abundant — Submerged surfaces have a definite fuzzy or blanketed (covered with gelatinous mat) appearance. The thickness of attached growth exceeds 5mm.

- FILAMENTOUS ALGAE: Refers to the areal percent of the substrate sampled which is covered with algae that is hair-like or stringy in appearance. Circle the appropriate number.
  1. Absent — 0%
  2. Sparse — > 0% but < 5%
  3. Moderate — 5% to 25%
  4. Abundant — > 25%

- AQUATIC MOSS: Refers to the areal percent of the substrate sampled which is covered with aquatic moss. Circle the appropriate number.
  1. Absent — 0%
  2. Sparse — > 0% but < 5%
  3. Moderate — 5% to 25%
  4. Abundant — > 25%

STREAMSIDE VEGETATION

- % of SAMPLE COLLECTED Usually all of the sample collected will fit in a one quart mason jar. If the sample will not fit, even after removing leaves and sticks, without overfilling the jar, mix the sample until all the components (algae, leaves, twigs, rocks, sand, etc.) appear to be uniformly mixed and discard enough of it so that the remainder will fit without over packing the jar. Write down the % of the total sample that is placed in the jar
- UNIT of EFFORT: Refers to the amount of time the vegetation was agitated. The collection should proceed for **3** minutes. Record the actual time of collection in minutes.
- CPOM in SAMPLE: "Coarse Particulate Organic Matter" Refers to the % of sample composed of partially or well-rotted plant material not counting the substrate being sampled. This should mostly be composed of leaf material. Do not count freshly fallen leaves that have not started to rot. Circle the appropriate number.
  1. Absent — 0%
  2. Sparse — > 0% but < 5%
  3. Moderate — 5% to 25%
  4. Abundant — > 25%

- PRESENCE: Refers to the amount of suitable streamside vegetation or woody debris habitat present in the stream. Circle the appropriate number.
  1. Occasional — Indicates that you must walk more than 50 meters to get a good 3-minute sample.
  2. Common — Indicates that you must walk 10 to 50 meters to get your sample.

3. Abundant — Indicates that a good sample can be collected in less than 10 meters of stream.

- TYPE: Refers to the type of streamside vegetation sampled. Circle all that makes up at least ¼ of the total habitat sampled.
  1. Grass-like Leaves — Leaves of aquatic or semi aquatic grasses & sedges which have been hanging in the water long enough to develop a periphyton and/or slime coat.
  2. Fine Roots — Root masses where most of the roots are <2 mm in diameter.
  3. Coarse Roots — Root masses where most of the roots are >2 mm but <6 mm in diameter.
  4. *Ludwigia* Stems — Stream macrophyte—not suitable habitat.

- VELOCITY TYPICAL MAX: This is an estimate of the average velocity of the habitat sampled in the fastest part of the stream. For streamside vegetation it would be on the outside (streamside) edge of the root mass. This velocity can be estimated using a floating object and a watch.
  1. Low — 0.2 to 0.5 ft/sec
  2. Medium — 0.5 to 1.0 ft/sec
  3. High — >1.0 ft/sec.

- NON-FILAMENTOUS ALGAE: Refers to the areal percent of the substrate sampled which is covered with algae that are not stringy in appearance. Circle the appropriate number.
  1. Sparse — When rocks, bedrock, limbs, trash, etc., are free of attached algae or have only a thin film of greenish or brownish algae that cannot be measured by holding a ruler perpendicular to the surface of the submerged object.
  2. Moderate — When the submerged surfaces have a slight fuzzy or blanketed appearance. The thickness of the attached algae does not exceed 5mm.
  3. Abundant — Submerged surfaces have a definite fuzzy or blanketed (covered with gelatinous mat) appearance. The thickness of attached growth exceeds 5mm.

- FILAMENTOUS ALGAE: Refers to the areal percent of the substrate sampled which is covered with algae that is hair-like or stringy in appearance. Circle the appropriate number.
  1. Absent — 0%
  2. Sparse — > 0% but < 5%
  3. Moderate — 5% to 25%
  4. Abundant — > 25%

WOODY DEBRIS

- % of SAMPLE COLLECTED: Usually all of the sample collected will fit in a one quart mason jar. If the sample will not fit, even after removing leaves and sticks, without overfilling the jar, mix the sample until all the components (algae, leaves, twigs, rocks, sand, etc.) appear to be uniformly mixed and discard enough of it so that the remainder will fit without over packing the jar. Write down the % of sample you estimate that you have placed in the jar

- UNIT of EFFORT: Refers to the amount of time the vegetation was agitated. The collection should proceed for **5** minutes. Record the actual time of collection in minutes.

- CPOM in SAMPLE: "Coarse Particulate Organic Matter" Refers to the % of sample composed of partially or well-rotted plant material not counting the substrate being sampled. This should mostly be composed of leaf material. Do not count freshly fallen leaves that have not started to rot. Circle the appropriate number.
  1. Absent — 0%
  2. Sparse — > 0% but < 5%
  3. Moderate — 5% to 25%
  4. Abundant — > 25%

- PRESENCE: Refers to the amount of suitable streamside vegetation or woody debris habitat present in the stream. Circle the appropriate number.

1. Occasional — Indicates that you must walk more than 50 meters to get a good 5-minute sample.
2. Common — Indicates that you must walk 10 to 50 meters to get your sample.
3. Abundant — Indicates that a good sample can be collected in less than 10 meters of stream.

- SIZE: Refers to the average diameter of the woody debris sampled. Check all lines where that size class makes up at least 1/4 of the habitat sampled.
  1. Small — 0.6 to 2.0 cm
  2. Medium — 2.0 to 7.5 cm
  3. Large — >7.5 cm

- STATE OF DECAY: Refers to the state of decay of the woody debris sampled. Circle all that apply where debris of this type makes up at least ¼ of the habitat sampled. All of these categories may or may not have bark on them. These categories are determined by firmly pressing your thumbnail into the wood (not bark) of the debris sampled perpendicular to the grain. The depth of the indentation, if any, which remains when your thumbnail is removed is measured to determine the state of decay.
  1. Low — Indentation is 0 to 0.5 mm deep
  2. Moderate — Indentation is 0.5 to 2 mm deep
  3. High — Indentation is > 2 mm deep

- VELOCITY TYPICAL MAX: This is an estimate of the average velocity of the habitat sampled in the fastest part of the stream. For woody debris, it would be the average velocity of the water passing over the sides of the wood. This velocity can be estimated using a floating object and a watch.
  1. Low — 0.2 to 0.5 ft/sec
  2. Medium — 0.5 to 1.0 ft/sec
  3. High — >1.0 ft/sec.

- NON-FILAMENTOUS ALGAE: Refers to the areal percent of the substrate sampled which is covered with algae that are not stringy in appearance. Circle the appropriate number.
  1. Sparse — When rocks, bedrock, limbs, trash, etc., are free of attached algae or have only a thin film of greenish or brownish algae that cannot be measured by holding a ruler perpendicular to the surface of the submerged object.
  2. Moderate — When the submerged surfaces have a slight fuzzy or blanketed appearance. The thickness of the attached algae does not exceed 5mm.
  3. Abundant — Submerged surfaces have a definite fuzzy or blanketed (covered with gelatinous mat) appearance. The thickness of attached growth exceeds 5mm.

- FILAMENTOUS ALGAE: Refers to the areal percent of the substrate sampled which is covered with algae that is hair-like or stringy in appearance. Circle the appropriate number.
  1. Absent — 0%
  2. Sparse — > 0% but < 5%
  3. Moderate — 5% to 25%
  4. Abundant — > 25%

COMMENTS Record any useful information that provides insight to the sample collection process, conditions, or miscellaneous information.

4.0 APPENDIX B

STANDARD OPERATING PROCEDURE
Subsampling and Picking Summary

Subsampling and Picking of Macroinvertebrates from field Collected Samples
The waterbody assessment procedure utilized by OCC requires that a random sample of macroinvertebrates be collected, identified and enumerated, from the portion of the waterbody being assessed. In order to make this test cost effective it is not possible to identify more than about 150 organisms from each site. This procedure describes the procedure used to subsample a field-collected sample, which may contain 200-10,000 organisms.

1. **Obtain the Field Sample to be Subsampled.** The field collected macroinvertebrate samples and the original Chain of Custody will be transferred to the individual(s) designated to complete the macroinvertebrate subsampling and picking. At this time a copy of the Chain of Custody (signed by the subsampling designee) will be sent to the Data Manager.

   The sample will come from the field in 1-quart Mason jars preserved with 100% ethanol. Mason jar lids have a sealing compound that is not particularly resilient. Care must be taken so that the lids are not damaged when they are opened or resealed. If a lid is damaged it must be replaced with a new one. Keep a fresh supply of lids handy in case this happens. If you use a new lid, label it exactly the same as the one that was originally used.

   Samples will be subsampled/picked in the order assigned on the Chain of Custody form.

2. **Decant Ethanol.** Without shaking or disturbing the contents, pour the liquid from the sample through a sieve made of #30 or finer screen. Save the ethanol to preserve the unused portion of the sample.

3. **Rinse Sample.** At this point, any silt, clay or fine sand in the sample should be GENTLY rinsed out of the sample. Be careful not to break off any of the delicate appendages that are used for identification of the animals. The sample will be easier to process if any large pieces of leaf, bark, stones, etc., are washed carefully and discarded.

4. **Prepare Sample for Picking.** Spread the selected portion out in a rectangular tray/pan that is divided into 28 sections of equal area. The size and shape of the divisions are not important so long as they are all equal in size. A pan with a white background may facilitate the picking since there will be a contrast between organism and the pan.

   A clear glass pan or baking dish can be effectively used by creating a grid system on the bottom of the pan using a permanent marker. Each square should be numbered (1-28), and a sheet of white paper can be glued or taped over the outside bottom of the pan. If very many samples will be subsampled it will be worth your time to construct a divider for the tray similar in construction to an ice cube tray divider. This will not only demarcate the subsampling squares, but it will also prevent animals from drifting from one square to another during subsampling.

5. **Remove Large Pieces of Detritus and Sediment.** Large leaves and big pieces of wood and bark should be removed. Be VERY CAREFUL to pick all macroinvertebrates off of them before discarding. At this point, the material remaining in the dish should consist of a mixture of sand, fine gravel, small organic detritus, pieces of leaves < 1-2 cm wide, fine roots, algae and macroinvertebrates.

6. **Spread Sample Out.** All detritus and sediment should be as uniformly distributed over the bottom of the dish as possible.

7. **Visually Estimate Invertebrate Density of the Sample.** Determine if the sample must be subdivided. The decision will be based on three requirements: (1) individual squares MUST have AT LEAST 3 animals in them (providing the entire sample has at least 100 animals total), (2) you must pick at least five (5) squares, and (3) each square can have absolutely NO MORE THAN 25 animals. Simulid (blackfly) larvae are not to be counted as individuals for this purpose. That is, the density estimate should be independent of any blackfly larvae present. The goal is to have roughly 10 TO 20 ANIMALS PER SQUARE. This is a compromise between the statistical ideal of very few organisms per square and ease of subsampling where the entire sample is picked from one square. If you estimate that there are less than 200 animals in the entire sample, you should process the entire sample.

The purpose of this estimate is to make the sample statistically valid. Fewer than 80 animals does not provide a good representation of the population to draw conclusions from, and more than 130 animals biases the sample making it appear that that stream has more taxa, that it really does. Correctly estimating densities is something that can only be done with experience, do not become discouraged.

8. **Subdivide the Sample.** If each square is estimated to have more than 25 animals, it is important to grossly subdivide the sample prior to picking. For instance, divide the sample in half or quarters depending on the animal density. Ideally 10 to 20 animals per square is desirable.

   For dividing in fourths, cut the sample into top and bottom halves and then into right and left halves. After dividing the sample, the four portions should appear as equal as possible in terms of the amount of detritus and sediment present. Choose one quarter by random means. For instance, flip a coin to select either the top half or the bottom half, and then flipping the coin again to select either the right or left side of the first half selected. If the sample is not too dense, that is the selected quarter has a density of 10 to 20 animals per square, then no additional subdivision is necessary. If the number of invertebrates is still too dense, divide the remaining portion in half and select one half by flipping the coin again. Continue dividing the sample until the density appears to fall in the correct range.

9. **Return the Unselected Portion(s) to the Mason Jar.** Return the unselected portion(s) of the sample to the original Mason jar and add the reserved alcohol. Be very careful to remove the entire portion of unselected subsample. A proportionately high density of small macroinvertebrates can remain hidden in the sediment and detritus. .

10. **Fill the Tray About 1 to 2 cm Deep With Water.** Add enough tap water to fill the tray to a depth of 1–2 cm (~0.5 to 0.75 inches). The water aids in the subsampling process. The organisms and individual pieces of detritus do not clump together as when they are dry. If the water is run into the tray very slowly, the remaining leaves and large pieces of detritus can be rinsed and discarded.

11. **Distribute the Sample Evenly.** Make sure that all materials in the tray are evenly distributed, especially the gravel and leaves. If a divider is to be used, place it in the tray now. Once the sample has been distributed, do not move the pan. Jostling can cause the organisms to move outside of their designated square. This could lead to a sampling bias.

12. **Fill Out the Macroinvertebrate Picking Data sheet.**
    - **Stream Information.** Record the date of subsampling, the site date and time, stream name, waterbody identification number (WBID #), legal description, Chain of Custody form number (COC#), and sample type (woody, vegetation, riffle).
    - **Estimate the Composition of the Sample.** Exclusive of invertebrates, estimate the composition of the sample according to the following list: silt and clay, sand, fine gravel (<2mm), course gravel (>2mm), woody debris (twigs, bark, roots, etc.), whole leaves, well-rotted pieces of leaves, filamentous algae, and unidentifiable organic material. Record the percentage of each fraction.
    - **Record the Fraction of the Sample That Was Picked.** Record the fraction of the sample that was placed into the tray for sampling –e.g. 1/2, 1/4, or 1/8 of the original Mason jar sample. This is important because the density calculations depend on this number.
    - **List Each of the Squares That Was Picked.** List the number of the square that was picked on the **Macroinvertebrate Picking Data** sheet along with the number of organisms that were picked from that square.

INFORMATION TO INCLUDE	SAMPLE NOTEBOOK PAGE						
Subsampling Date	11/18/99						
Site Date	07/16/99						
Stream Name	Griever Creek						
Site Time	13:10						
Legal Description & County	E 9 T22N R15W, Major County						
WBID #	OK620920-01-0130g						
COC #	COC# 1772						
Sampling Type	Riffle kick						
Sample Description	40%fine gravel	10% film. algae	30% well-rotted leaves				
	10% whole leaves	5% woody debris	5% coarse gravel				
Amount of Sample Picked	¼ of the original sample was prepared for picking						
Squares Picked	Square #	1	12	3	23	28	10
# of animals found in each square	# picked	15	27	10	18	8	24
Subsampler's name	John Hassell						

13. **Randomly Select 6 Squares.** Using some method to generate a series of random numbers (random number generator or number table), select at least 6. The random number generators found on most pocket calculators or the Excel spreadsheet function will give a series of three digit numbers—usually >0 but <1. For OCC purpose, use only the last two numbers. Starting with the first random number generated, record all numbers between 01 and 28 until there are 6. These numbers represent the numbered squares to pick. Picking must follow the order in which the number were generated.

14. **Confine the Organisms to the Selected Square.** Place rectangles or squares constructed of clear plastic or other material that are the same or greater height as the water in each square. This will keep the organisms from drifting out of the squares during the picking process. If a large piece of detritus (leaves, roots, algae masses) crosses the boundary of two or more squares, it may be sliced along the edge of the square so it is contained with the boundary of the selected square.

    If there are any organisms that cross square boundaries, do not cut them. Place them in the square in which their head is already lying.

15. **Pick <u>All</u> the Invertebrates Out of the First Square Selected.** Locate and collect all the organisms in the selected square. Keep track of the number of non-blackfly organisms picked. Place the organisms picked in a scintillation vial that is filled up to the neck with 70-100% ethanol. If any large organisms (that are too big to fit in the vial with the other organisms) are picked such as crayfish or hellgrammites, place them in a separate vial. If there is some question if something is an organism, place it in the vial but <u>DO NOT COUNT</u> it as part of the total. Place five (5) blackflies and five (5) scuds in the vial but <u>DO NOT COUNT</u> them as part of the total. Pickers should be trained to identify blackfly larval forms—if the picker cannot identify blackflies, they should not be subsampling without further training. Note the general abundance of blackflies and scuds in the comments.

    When all of the organisms are picked out of the square, record the number of non-blackflies that were picked from that square under the number of that square on the data sheet. See example page listed above.

16. **Continue to Pick Squares Until 100 Organisms Have Been Collected.** Using the random number list, continue to select squares until 100 (non-blackfly) animals have been collected. Once a square has been started, all of the animals must be collected from that square. A subsample will typically have 100-130 organisms / vial. If there are more than this, the sample was not properly subdivided. If the sample has more than 150 organisms in it, it must be mixed back in with the rest of the "unpicked sample" and re-picked. If the finished invertebrate sample has less than 80 organisms

in it and there is unpicked sample available, another tray full of sample must be picked. The ONLY time that it is acceptable to have a sample with less than 100 organisms is when the entire Mason jar of material has been picked. All other samples containing less than 100 invertebrates will be rejected as data with bad QA/QC.

17. **Label the Vial(s).** Using a pencil and a fine point permanent ink marker label the vial. The top and side of the vial should both be labeled.

    The vial should be labeled in pencil on waterproof paper taped to the vial after labeling with the following information:
    - Stream name
    - WBID #
    - Legal location and County
    - Site Time
    - Site Date
    - Type of sample
    - Number of vials for this sample (e.g. 1 of x, where x = total number vials for one site (Mason jar))

    The cap should be labeled in permanent ink with the following information:
    - Stream name
    - Site time
    - WBID #
    - Site Date
    - Type of collection
    - Number of vials for this sample

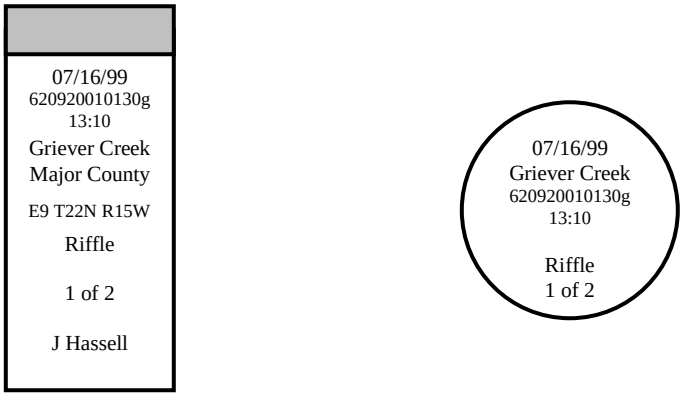

Scintillation Vial Scintillation Vial Cap

Figure 1: Example label for bug picking sample.

18. **Place Clear Tape Over the Label.** To protect the label from the ethanol, place clear tape (scotch tape) over the writing (pencil).

19. **Transfer Picked Samples to the Taxonomist**. Once macroinvertebrate samples have been picked and placed in a properly labeled scintillation vials, the vials and the original Chain of Custody form will be transferred to the laboratory for taxonomic identification. The original Chain of Custody form should be returned to the Data Manager with the signature of the taxonomist or laboratory custodian.

20. **Archive Remaining Sample.** The remainder of the field collected macroinvertebrate samples (un-picked) should be delivered to Nathan Carter for archive purposes. The Chain of Custody form number should be conspicuously labeled on the outside of the box.

OKLAHOMA CONSERVATION COMMISSION
WATER QUALITY DIVISION

STANDARD OPERATING PROCEDURE

PERIPHYTOMETERS AND PROCESSING FOR CHLOROPHYLL-A MEASUREMENT

1.0 PROCEDURAL SECTION

1.1 Scope and Application[21]

Microorganisms growing on stones, woody debris, aquatic macrophytes, and other submerged surfaces often result from water pollution and are collectively termed periphyton. Periphyton refers to a group of organisms, which include the zoogleal and filamentous bacteria, attached protozoa, rotifers, and algae, and the free-living microorganisms that swim, creep, or lodge among the attached forms. Periphyton is a useful evaluation measurement because the abundance and composition of the periphyton community at a given location is related to the water quality at that point. The periphyton itself is often the undesired component of a stream; the pollutant is the cause.

1.2 Summary of Method

The use of periphyton in assessing water quality is hindered by the lack of suitable natural habitat occupying proper conditions with a known history. To compensate for these limitations, an artificial substrate (2.5 inch glass rods) is deployed with a known area, known light exposure, known current exposure, and for a set period of time. The periphyton that grows on the substrate is collected and quantified using a chlorophyll-a and phaeophyton evaluation processes. Chlorophyll-a concentration is directly related to the amount of periphyton. Higher periphyton growth rate equates to higher stream productivity. High productivity can be an indication of excessive nutrient levels.

1.2.1 Definitions

- Periphyton: refers to a group of organisms, which include the zoogleal and filamentous bacteria, attached protozoa, rotifers, and algae, and the free-living microorganisms that swim, creep, or lodge among the attached forms.

1.3 Health and Safety Warnings

- Proper laboratory procedures should be followed during the processing of periphyton samples. Goggles should be worn when the tissue grinder is used and when the glass rods are being cut. Processing should occur in a well-ventilated area due to acetone fumes.
- Safety glasses and gloves should be worn when snapping glass rods during periphytometer construction

1.4 Cautions

None

1.5 Interference

- Macroinvertebrate infestations and grazing may occur which will bias the results.
- Stonerollers (when present) must be excluded because of their ability to graze periphyton.
- Intervening rains may cause flooding or changes in stage, which will bias the collection.
- Drifting clumps of algae may become lodged on periphytometer.
- Shading may be caused by drifting debris.

1.6 Personnel Qualification

Field personnel must be trained and evaluated on the use of equipment prior to collecting samples or data. Use of the equipment is subject to approval by the QA Officer and/or the Environmental Monitoring Coordinator. Training will be done through dry run exercises in the laboratory and field to familiarize field personnel with operation/collection, calibration and maintenance. Investigators must be familiar with the SOP document and owner's manual, when applicable.

1.7 Apparatus & Materials

1.7.1 Materials needed for manufacture of periphytometers:

- 8 mm diameter solid glass rod
- soft iron wire 15 gauge, 18 gauge, and 22 gauge
- glue suitable to bind wire to glass underwater for >2 weeks (liphatic epoxy resin)
- abrasive wheel: 60-100 grit
- assorted wire cutters and pliers for bending wire
- caliper to measure tenths of millimeters
- files to nick glass rod for breaking

[21] Text taken directly or in part from Standard Methods (APHA, AWWA, WPCF, 1992).

- board with pre-drilled holes to hold 8 mm glass rod in a vertical position with one end exposed.

1.7.2 Materials needed for sample collection and sample preparation:

- ice
- 100 mL Whirl Paks
- 47 mm Whatman G F/C filters or equivalent
- a Millipore type filtering apparatus
- 100 mL graduated cylinder
- 1000 mL graduated cylinder
- filter forceps
- stainless steel spatula
- tissue grinder
- $MgCO_3$ buffered 9 to 1 acetone water as per Standard Methods/with squeeze bottle
- 1 quart (1 L) HDPE bottle
- wire cutters
- monofilament fishing line or other thin, sturdy line
- 16 x 125 mm screw cap test tubes

1.8 Instrument/Method Calibration

Not applicable

1.9 Equipment Operation & Preparation

1.9.1 Manufacture of Periphytometers

1. Refer to Figure 1 for a visual description of periphytometer.
2. Using a file to etch the glass, break the rod into 2½" (63.5 mm) pieces. The break should be clean and straight across the rod. Wear gloves and safety glasses during this process to prevent injury. If a long (>2 mm) flake of glass comes off one side of the rod, reject the entire rod.
3. Using light pressure, grind one end of the rod using the abrasive wheel so that the end is approximately flat and the entire surface is roughened.
4. Repeat steps 1 and 2 until you have sufficient rods. Ten rods will be deployed at each sampling site.
5. Bend the 18 gauge soft iron wire into loops or eyes such that they will stand up by themselves. Manufacture as many loops as you have rods.
6. Place the rods in the wooden holder with the roughened side up and glue the loops to the rods so an eyelet is formed.
7. After the glue has dried, clean up any that has run down the sides of the rods.
8. Bend the 15 gauge wire into "T" shaped forms that have a loop on all ends. The two ends of the "T" should be about 7 to 9 cm apart and the leg of the T can be any length from 1 to 7 cm.
9. Using the 22 gauge wire attach a rod to each end of the "T" by forming a loop about 1½ cm long. The periphytometer is now complete.

1.9.2 Placement of Periphytometers In Stream

1.9.2a Requirements of Stream Site

1. No shading from trees or bushes on bank.
2. A pool that lies immediately below a riffle. The pool should not be stagnant (water should be entering and leaving pool) but should be calm (flow should be less than 0.1 ft/sec.).
3. The pool should be so deep that the periphytometer does not touch the bottom of the pool.
4. Weather conditions such that there have been no high flow events for the 2 days preceding incubation and during the 2 weeks of periphytometer incubation. All periphytometers should be placed so that they will remain at a uniform depth for the two-week incubation period. In order to ensure this, do not place periphytometers in a stream that is above the normal base flow level. There will usually be some sort of line demarcating the zone at the air/water interface where mosses and semi-aquatic algae grow. A periphyton line near the bank is a useful indicator. If the line is submerged more than 2 cm, the stream is above base flow conditions—do not deploy.

1.9.2b Placement of Periphytometers

1. Using monofilament fishing line, suspend 10 periphytometers at each site. Locate a pool immediately below a riffle so that the top of the glass rod lies between 2 and 5 cm below the water surface. Check to see that the line suspending the periphytometer is not more than slightly deflected from vertical by any current, or measure flow to be sure it is <0.1 ft/sec. The periphytometer should be in very slow flowing (not stagnant) water and should not be in an eddy.
2. The periphytometer should be suspended from something that will not shade it. Things such as wires or fences across streams and dead tree branches lying in the stream usually make a suitable support. If nothing like this can be found, the periphytometer can be suspended from a section of dead branch that is floating in the water and anchored to the shore or something upstream. It should be tied in such a manner that it cannot drift into a shady or fast flowing area of the stream and it should be 1 inch or less in diameter so as not to shade the periphytometer.
3. During a group of deployments select one set of periphytometers to split and use as a duplicate. The set of periphytometers selected should have 8 or more acceptable rods for processing. Randomly divide the rods in half. One half will represent the sample the other will be used as a duplicate.
4. Complete the applicable portion of the **Periphyton Sheet** along with the **Episode** and **Site Collection Field Data Sheets**. On the Periphyton Sheet be sure to include a detailed description of the deployment site so that someone unfamiliar with the area could retrieve the samplers. This should include the name of the road with the nearest bridge, the property owner's name (if known), direction and distance from the nearest bridge, any permanent physical landmarks that could be used as icons. The **Episode**, **Site Collection**, and **Periphyton Sheets** will be filled out more completely when the periphytometers are collected.

1.10 Sample Collection (Retrieval of Periphytometers)

1. After 14 days collect the periphytometers.
2. Record site information. Fill-in the appropriate information on the **Sampling Episode**, **Site Collection**, and **Periphyton Sheets**. Be sure to include: the time and date of retrieval, and physical chemical data (DO, pH, Conductivity, Alkalinity, and temperature).
3. Collect 1 quart (~1 L) of stream water in a clean HDPE plastic container. This sample is used to measure chlorophyll in the water column.
4. Label 4 oz (115 mL) Whirl Paks with indelible ink (Sharpie or Bic pen) before collecting periphytometers (while they are still dry). The label should include a waterbody ID number, a site name, site date and time, and name of sampler.
5. Very gently, so as not to dislodge any loosely attached periphyton, lift the periphytometers out of the water in order to inspect for amount of growth and grazing.
6. Determine if the periphytometer is suitable for analysis. Each rod is treated as a separate sample.
   Selection criteria for periphytometers
   a) The periphytometers should be completely immersed in water between 2 and 5 cm below surface;
   b) Floating debris (plastic bags, leaves, etc.) should not cover any part of the periphytometer;
   c) The periphytometers should not have been subjected to a high flow event. This is defined as a rise in the water level of two feet or more for more than 24 hours;
   d) The periphytometers should not have >10% of the surface area scraped clean by any means. This includes grazing and physical abrasion; and
   e) Select the periphytometers with the most uniform and the heaviest algal growth.
7. Collect as many as 5 periphytometers, but if fewer than 5 are acceptable, collect as many as possible.
8. For each usable periphytometer, suspend it over the opening of a Whirl Pak that contains about 25-35 mL of stream water. If the measurement is critical and the variation between rods warrants it, use reconstituted bioassay water of the appropriate hardness, well water, or non-chlorinated drinking water instead of stream water. Clip the wire that holds the rod onto the hanger device allowing the rod to fall into the Whirl Pak without touching the sides of the bag above the water line.
9. Seal the Whirl Pak, and lay it flat on ice for transport.
10. Periphytometers need to be processed within 48 hours.

1.11 Sample Handling & Preservation

- Periphytometers should be transported in Whirl Paks containing about 25-35 mL of stream water or, if required, reconstituted bioassay water, well water, or non-chlorinated drinking water. Sealed Whirl Paks should be kept flat, in the dark, and on ice.
- Extraction procedure should be done in dim light.

- Extract tubes should be immediately placed in the dark at <-20ºC.

1.12 Sample Preparation and Analysis

1.12.1 Processing of Periphytometers

1. Open the Whirl-Pak, being careful not to slop water out of the top of the bag.
2. Remove the periphyton from the glass by rubbing the sides of the bag against the rod until all visible algae is removed. There may be a small amount of algae in rough areas on the ends of the rods that does not come off. This is acceptable. If the periphyton is particularly resistant to physical abrasion, a razor blade can be used to scrape the material.
3. Pour the water from the Whirl Pak into a 100 ml graduated cylinder. Use caution not to drop the glass rod into the cylinder.
4. Rinse the inside of the bag with DI or well water into the graduated cylinder.
5. Measure the amount of periphyton suspension (periphyton and water) in a graduated cylinder. Record this information on the Periphyton Sheet as "Total Volume".
6. Pour the suspension into the filtering apparatus fitted with a vacuum pump and Whatman GF/C filter paper. Prior to filling the filter cup, gently, but thoroughly agitate the suspension so that a representative sample is being filtered. Repeat this process with subsequent pourings.
7. Filter 10 – 15 mL of sample, it is not necessary to filter the entire amount in the graduated cylinder. However, all liquid poured into the filter cup must be filtered because larger chunks of periphyton may settle; thus biasing the sample. If the filter clogs up before the entire amount is filtered, you must start again with a new sample volume. Rinse the sides of the filter cup with DI water. Record the volume that was filtered on the Periphyton Sheet as "Filtered Volume". Calculate the percent of the sample that was filtered by dividing the Filtered Volume by the Total Volume. (In some cases, it is not good to filter a great deal of the suspension. If there is a lot of chlorophyll on the rods, and it's all filtered, the absorbance of the final sample will be too high to get a good reading. The final absorbance in the extract solution should be > 0.1 and < 1.0; this is light green to medium green in the extract tube.
8. After filtering, carefully lift off the filter paper containing the periphyton and fold it into quarters with the algae on the inside. Place this into the tissue grinder.
9. Pour ≈ 1 mL of acetone solution over the folded filter and macerate it with a small stainless steel spatula, then add ≈ 3 more mL using the additional acetone solution to rinse the spatula.
10. Grind the sample until it appears to be completely homogenized. More acetone may be added as necessary to facilitate grinding, but the final volume should be minimized to facilitate the spectrophotometer reading.
11. Pour the acetone solution containing the ground sample into a 16 × 125 mm screw cap test tube. Use a few more mL of acetone solution to rinse out the tissue grinder into the test tube. Try to keep the total volume of extract solution to 10 mL as this will make measurement of the extract volume easier. Minimizing the extract volume will also concentrate the chlorophyll so that the final absorption will be higher if there was not much algae in the sample.
12. Steep samples in the dark at 4° C for a minimum of two hours.
13. Extracted samples in acetone solution should be frozen (below –20º C) after steeping. Frozen samples can be stored for up to 6 months at this temperature. It is very important to keep the samples in the dark, as light will rapidly degrade free chlorophyll.
14. Frozen samples can be submitted to an analytical laboratory for analysis.

1.12.2 Processing of Stream Sample

The quart sample of stream water, representing the water column, is treated similarly to the periphytometers. Sample processing and analysis follows the methods described below with the following exceptions.

1. Pour the quart sample into a 1000 mL graduate cylinder and record total volume.
2. Pour the suspension into the filtering apparatus fitted with a vacuum pump and Whatman GF/C filter paper. Prior to filling the filter cup, gently, but thoroughly agitate the suspension so that a representative sample is being filtered. Repeat this process with subsequent pourings.
3. Filter the entire amount of sample unless it is excessively turbid or loaded with phytoplankton. Record the volume that was filtered on the Periphyton Sheet as "Filtered Volume".
4. Follow steps 8 – 14 listed above.

1.13 Troubleshooting

Consult an experienced staff member or professional.

1.14 Data Acquisition, Calculation & Data Reduction

Using the corrected values (or uncorrected if your machine won't measure absorption at 750 nm), calculate chlorophyll-a and phaeophyton-a as follows:

$$\text{Chlorophyll-a, } \mu g/L = \frac{26.7\,(664 - 665) \times V_1}{V_2}$$

$$\text{Phaeophyton-a, } \mu g/L = \frac{26.7[\,1.7(665) - 664] \times V_1}{V_2}$$

Where:

V_1 = volume of extract in mL;
V_2 = volume of sample in liters;
664 = optical density of 90% acetone extract before acidification; and
665 = optical density of 90% acetone extract after acidification.

1.15 Computer Hardware & Software

Not applicable

1.16 Data Management & Records Management

1.16.1 Field Notation

A **Sampling Episode Sheet** should be filled out for each day or deployment of periphytometers. A **Site Collection and Periphyton Sheet** (see **SOP Appendix: Data Sheets**) should also be filled out for each site sampled. For more information, refer to the procedures outlined in the **Procedure for Completing Field Data Sheets SOP**. A separate **Site Collection Sheet** will be filled out for the deployment and retrieval visits. Be sure to mark/circle the appropriate activity on the **Site Collection Sheet**. However, only one **Periphyton Sheet** will be used for both the deployment and the retrieval visits. This data sheet should be submitted with the rest of the paperwork associated with the retrieval site.

The **Periphyton Sheet** is divided into Data Sheet Header, Site, Field, and Processing Information sections. Each of these are described below.

DATA SHEET HEADER INFORMATION:

- SITE NAME: Record the stream name from the USGS 7-1/2' map name. If a county map, soil map, or other map has a different name, the USGS 7-1/2' map takes precedence. If a stream is unnamed on the USGS map, but named on another map, use that name, but write the name of the map in parentheses beside the stream name.
- WBID #: Record the Waterbody Identification Number.
- LEGAL/COUNTY: Record legal description down to 1/8 section including county of site.
- INVESTIGATORS: Record all samplers for deployment and retrieval.

SITE INFORMATION:

- DATE: Record the site date for the deployment and retrieval visits in MM/DD/YY format.
- TIME: Record the site time for the deployment and retrieval visits in military format. The "site time" is when initial activities began at the site.

FIELD INFORMATION:

- Days since last rain >0.5 in: For the deployment and retrieval visits, record the number of days since there was a significant rain (>0.5 inches). Flow is particularly important for accurate periphyton results.
- Describe periphyton…: For the *in situ* periphyton, briefly describe the appearance and color. Periphyton condition should not change drastically within the two-week deployment period, but provide a general description from both site visits.

- Algal strands > 1.25"? — Circle "yes" if there are strands of periphyton greater than 1.25" long or "no" for otherwise.
- If yes, where? — Describe the location where the strands are observed (pools, riffles, both or other).

PROCESSING INFORMATION:

- Rod # — Designated periphyton rod number or description. Include information about the stream water column sample.
- Total Volume — Measure the amount of periphyton suspension (periphyton and water) in a graduated cylinder. Record this information on the **Periphyton Sheet** as "Total Volume".
- Filtered Volume — The amount of periphyton liquid suspension that passed through the filter is the "Filter Volume".
- % Filtered — Calculate the percent of the sample that was filtered by dividing the Filtered Volume by the Total Volume.
- Water Column

1.16.2 Chain of Custody Procedure

Processed periphyton samples that are analyzed at a laboratory requires the use of a Chain of Custody form. The handling of COC should follow the procedures described in the **Chain of Custody and Sample Labeling SOP**.

2.0 QA/QC SECTION

2.1 Training

Training of field personnel will be done through dry run exercises in the laboratory to familiarize them with instrument operation, calibration, and maintenance. All operators are required to become familiar with the SOP document and proper procedures. Prior to solo sample collection, field personnel are evaluated in a field setting for proper use of equipment and sample collection protocol. Annual field audits are performed on sample collectors following procedures outlined in the Quality Management Plan.

2.2 Maintenance

- Clean the grinder thoroughly when finished
- Periphytometers can be reused. The rods must be thoroughly cleaned to remove any chlorophyll or spores that may remain on the glass rod and supporting wire. Scrub vigorously and soak in a weak acid solution.

2.3 QC Procedures

The field personnel are evaluated on an annual basis to critique sampling techniques and to assure proper deployment.

A duplicate set of periphytometers (10 rods) is deployed for every 10 sites evaluated. If less than 10 sites a day are established, a duplicate is deployed at least once during a sampling episode.

3.0 REFERENCES

APHA, AWWA, and WPCF (1992) Standard Methods for the Examination of Water and Wastewater, 17th edition, eds. L.S. Clesceri, A.E. Greenberg, and R.R. Trussell, American Public Health Association, Washington, D.C.

4.0 APPENDIX A

STANDARD OPERATING PROCEDURE
Field Summary

Periphytometers

4.1 Equipment Operation & Preparation

4.1.2 Placement of Periphytometers In Stream

4.1.2a Requirements of Stream Site

1. No shading from trees or bushes on bank.
2. A pool that lies immediately below a riffle. The pool should not be stagnant (water should be entering and leaving pool) but should be calm (flow should be less than 0.1 ft/sec.).
3. Pool depth should be at least 4" deep.
4. Weather conditions such that there have been no high flow events for the 2 days preceding incubation and during the 2 weeks of periphytometer incubation. All periphytometers should be placed so that they will remain at a uniform depth for the two-week incubation period. In order to ensure this, do not place periphytometers in a stream that is above the normal base flow level. There will usually be some sort of line demarcating the zone at the air/water interface where mosses and semi-aquatic algae grow. If this line is submerged, the stream is above base flow conditions—do not deploy.

4.1.2b Placement of Periphytometers

1. Suspend 10 periphytometers at each site. Locate a pool immediately below a riffle so that the top of the substrate surface lies between 2.5 and 3.5 cm below the water surface. Check to see that the line suspending the periphytometer is not more than slightly deflected from vertical by any current, or measure flow to be sure it is <0.1 ft/sec. The periphytometer should be in very slow flowing (not stagnant) water and should not be in an eddy.
2. The periphytometer should be suspended from something that will not shade it. Things such as wires or fences across streams and dead tree branches lying in the stream usually make a suitable support. If nothing like this can be found, the periphytometer can be suspended from a section of dead branch that is floating in the water and anchored to the shore or something upstream. It should be tied in such a manner that it cannot drift into a shady or fast flowing area of the stream and it should be 1 inch or less in diameter so as not to shade the periphytometer.
3. Remember to perform duplicate measurements every 10 samples. If less than 10 samples a day are collected, one duplicate should be deployed for each day of sampling.
4. Fill-out the applicable portion of the **Periphyton Sheet** along with the **Sampling Episode** and **Site Collection Sheets**. On the **Periphyton Sheet** be sure in include a detailed description of the deployment site so that someone unfamiliar with the area could retrieve the samplers. This should include the name of the road with the nearest bridge, the property owner's name (if known), direction and distance from the nearest bridge, any permanent physical landmarks that could be used as icons. The **Sampling Episode**, **Site Collection**, and **Periphyton Sheets** will be filled out more completely when the periphytometers are collected.

4.2 Sample Collection (Retrieval of Periphytometers)

1. After 14 days collect the periphytometers.
2. Record site information. Fill in the appropriate information on the **Sampling Episode**, **Site Collection**, and **Periphyton Sheets**. Be sure to include: time and data of retrieval, and physical chemical data (DO, pH, Conductivity, Alkalinity.
3. Collect 1 quart (~1 L) of stream water in a clean HDPE plastic container. This sample is used to represent chlorophyll in the water column.
4. Label 4 oz (115 mL) Whirl Paks with indelible ink (Sharpie pen) before collecting periphytometers (while they are still dry). The label should include a waterbody ID number, a site name, site date and time, and name of sampler.
5. Very gently, so as not to dislodge any loosely attached periphyton, lift the periphytometers out of the water in order to inspect for amount of growth and grazing.
6. Determine if the periphytometer is suitable for analysis. Each rod is treated as a separate sample.

   Selection criteria for periphytometers

   a) The periphytometer should be completely immersed in water between 2 and 5 cm below surface;
   b) The periphytometer should not be covered by floating debris (plastic bags, leaves, etc.);
   c) The periphytometer should not have been subjected to a high flow event. This is defined as a rise in the water level of two feet or more for more than 24 hours;

f) The periphytometer should not have >10% of the surface area scraped clean by any means. This includes grazing and physical abrasion; and

g) Select the periphytometers with the most uniform and the heaviest algal growth.

7. Collect as many as 5 periphytometers, but if fewer than 5 are acceptable, collect as many as possible.
8. For each usable periphytometer, suspend it over the opening of a Whirl Pak that contains about 25-35 mL of stream water. If the measurement is critical and the variation between rods warrants it, use reconstituted bioassay water of the appropriate hardness, well water, or non-chlorinated drinking water instead of stream water. Clip the wire that holds the rod onto the hanger device allowing it to fall into the Whirl Pak without touching the sides of the bag above the water line.
9. Seal the Whirl Pak, and lay it flat on ice for transport.
10. Periphytometers need to be processed within 48 hours, so make sure they are delivered to the OCC office within that time.

4.3 Sample Handling & Preservation

Periphytometers should be transported in Whirl Paks containing about 25-35 mL of stream water or, if required, reconstituted bioassay water, well water, or non-chlorinated drinking water. Sealed Whirl Paks should be kept flat, in the dark, and on ice.

4.4 Sample Preparation and Analysis (Processing of Periphytometers)

1. The quart sample of stream water, representing the water column, is treated just as if it was a periphytometer. Sample processing and analysis follows the methods described below.
2. Open the Whirl Pak, being careful not to slop water out of the top of the bag.
3. Remove the periphyton from the glass by rubbing the sides of the bag against the rod until all visible algae is removed. There may be a small amount of algae in rough areas on the ends of the rods that does not come off. This is acceptable. If the periphyton is particularly resistant to physical abrasion, a razor blade can be use to scrape the material.
4. Measure the amount of periphyton suspension (periphyton and water) in a graduated cylinder. Record this information on the Periphyton Sheet as “Total Volume”.
5. Pour the suspension into the filtering apparatus fitted with a vacuum pump and Whatman GF/C filter paper. Prior to filling the filter cup, gently but thoroughly agitate the suspension so that a representative sample is being filtered. Repeat this process with subsequent pourings.
6. Filter until the entire amount in the graduated cylinder has been processed or until the filter becomes completely clogged. Any liquid in the filter cup must be filtered because larger chunks of periphyton may settle, thus biasing the sample. Record the volume that was filtered on the Periphyton Sheet as “Filtered Volume”. If the filter clogs up before the entire amount is filtered, record the unfiltered volume on the Periphyton Sheet as “Remaining Volume”. Calculate the percent of the sample that was filtered by dividing the Filtered Volume by the Total Volume.
7. After filtering, carefully lift off the filter paper containing the periphyton and fold it into quarters with the algae on the inside. Place this into the tissue grinder.
8. Pour ≈ 1 mL of acetone solution over the folded filter and macerate it with a small stainless steel spatula, then add ≈ 3 more mL using the additional acetone solution to rinse the spatula.
9. Grind the sample until it appears to be completely homogenized.
10. Pour the acetone solution containing the ground sample into a 16 × 125 mm screw cap test tube. Use a few more mL of acetone solution to rinse out the tissue grinder into the test tube. Try to keep the total volume of extract solution under 10 mL as this will make measurement of the extract volume easier. Minimizing the extract volume will also concentrate the chlorophyll so that the final absorption will be higher if there was a minimal amount of algae in the sample.
11. Steep in the dark at 4° C for a minimum of two hours.
12. Extracted samples in acetone solution should be frozen (-20° C) after steeping. Frozen samples can be stored for up to 6 months at this temperature. It is very important to keep the samples in the dark, as light will rapidly degrade free chlorophyll.
13. Frozen samples can be submitted to an analytical laboratory for analysis, or the steeped extract can follow accepted spectrophotometric analytical methods as outlined below.

4.5 Data Management & Records Management

4.5.1 Field and Processing Notation

A **Sampling Episode Sheet** should be completed for each day or deployment of periphytometers. A **Site Collection Sheet** and **Periphyton Sheet** should also be completed for each site sampled. The same field data sheets will used after the two week sampling period. For more information, refer to the procedures outlined in the **Procedure for Completing Field Data Sheets SOP**.

The Periphyton Sheet is divided into Data Sheet Header, Site, Field, and Processing Information sections. Each of these are described below.

DATA SHEET HEADER INFORMATION:

- SITE NAME: Record the stream name from the USGS 7-1/2' map name. If a county map, soil map, or other map has a different name, the USGS 7-1/2' map takes precedence. If a stream is unnamed on the USGS map, but named on another map, use that name, but write the name of the map in parentheses beside the stream name.
- WBID #: Record the Waterbody Identification Number.
- LEGAL/COUNTY: Record legal description down to 1/8 section including county of site.
- INVESTIGATORS: Record all samplers for deployment and retrieval.

SITE INFORMATION:

- DATE: For the deployment and retrieval visits, record double digit month, day, and year (MM/DD/YY).
- TIME: Record the site time for the deployment and retrieval visits in military format. The "site time" is when initial activities began at the site.

FIELD INFORMATION:

- Days since last rain >0.5 in For the deployment and retrieval visits, record the number of days since there was a significant rain (>0.5 inches). Flow is particularly important for accurate periphyton results.
- Describe periphyton… For the *in situ* periphyton, briefly describe the appearance and color. Periphyton condition should not change drastically within the two-week deployment period, but provide a general description from both site visits.
- Algal strands > 1.25"? Circle "yes" if there are strands of periphyton greater than 1.25" long or "no" for otherwise.
- If yes, where? Describe the location where the strands are observed (pools, riffles, both or other).

PROCESSING INFORMATION:

- # Rods Scraped Record the number of rods scraped for each periphytometer.
- Total Volume Measure the amount of periphyton suspension (periphyton and water) in a graduated cylinder. Record this information on the Periphyton Sheet as "Total Volume".
- Filtered Volume The amount of periphyton liquid suspension that passed through the filter is the "Filter Volume".
- % Filtered Calculate the percent of the sample that was filtered by dividing the Filtered Volume by the Total Volume.
- Water Column

4.5.2 Chain of Custody Procedure

Processed periphyton samples that are analyzed at a laboratory requires the use of a Chain of Custody form. The handling of COC should follow the procedures described in the **Chain of Custody and Sample Labeling SOP**.

OKLAHOMA CONSERVATION COMMISSION
WATER QUALITY DIVISION

STANDARD OPERATING PROCEDURE

PH MEASUREMENT

(YSI ProPlus Multimeter)

1.0 PROCEDURAL SECTION

1.1 Scope and Application[22]

The measure of pH is an expression of the hydrogen-ion concentration in terms of its negative log. At any given temperature the intensity of the acidic or basic character of a solution is indicated by pH. The measurement of pH assumes that the molar concentration of $[H^+]$ equals $[OH^-]$ in pure water; which serves as the basis of the pH scale (0-14).

1.2 Summary of Method[1]

Use of the term pH assumes that the activity of the hydrogen ion is being considered. When pH is measured using a probe, the hydrogen activity is being measured, not actually the molar concentration. Activity is measured by potentiometric measurement using a standard hydrogen electrode and a reference electrode. For a more complete discussion of the potentiometric measurement, refer to Standard Method 4500 (APHA *et al*., 1992).

1.2.1 Definitions

pH = -log [H] where [H] = hydrogen ion concentration (mols/L)

1.3 Health and Safety Warnings

- Buffer solutions contain chemicals that should be treated with respect. Avoid inhalation, skin contact, eye contact or ingestion.
  - Inhalation may cause severe irritation and be harmful.
  - Skin contact may cause irritation and prolonged or repeated exposure may cause dermatitis.
  - Eye contact may cause irritation or conjunctivitis.
  - Ingest may cause nausea, vomiting and diarrhea.

1.4 Cautions[2]

- Do not store the probe dry or in DI water
- Make sure the automatic temperature compensation probe is working correctly and the temperature sensor is immersed in the sample/buffer.
- Allow the sensors time to stabilize with regard to temperature before reading—at least 60 seconds
- After "long term" storage in pH 4 buffer/KCl solution (probe storage solution), place the pH sensor in pH 7 buffer and allow to acclimate before calibrating (5 to 10 minutes)

1.5 Interference

The use of a standard probe with automatic temperature compensation is relatively free from interference from color, turbidity, oxidants, reductants and/or high salinity. However, at a pH> 10 sodium error may be a concern (APHA *et al*., 1992).

1.6 Personnel Qualification

Field personal must be trained and evaluated on the use of equipment prior to collecting samples or data. Use of the equipment is subject to approval by the QA Officer and/or the Environmental Monitoring Coordinator. Training will be done through dry run exercises in the laboratory and field to familiarize field personnel with operation/collection, calibration and maintenance. Investigators must be familiar with the SOP document and owner's manual, when applicable.

1.7 Apparatus & Materials

- YSI ProPlus Multimeter

1.8 Instrument Calibration[23]

Calibration of the meter should occur prior to initial sample collection according to manufacturer specifications (YSI 2010). Record the sensor value in mV for all calibration standards used. Record the slope in mV and the % of ideal in the appropriate fields. The slope should read between 55 and 60. If the slope falls outside the acceptable range, then the probe should be reconditioned. Results of the calibration should be recorded on the **Sampling Episode Sheet**.

The meter must be calibrated before making pH measurements. Calibration may be performed at 1, 2, or 3 points. For OCC purposes the meter calibration meter should involve at least a two-point bracket calibration. That is, one buffer is above the expected sample range and one buffer is below. For example, if the expected pH is 6, then the meter should be calibrated using

[22] Text taken directly or in part from Standard Methods (APHA, AWA, WPCF, 1992) and Sawyer *et al*. (1994).
[23] Text taken directly or in part from YSI ProPlus User Manual.(2009).

pH 4 and 7 buffers. A 3-point calibration with a pH 10 buffer does not increase the accuracy of this measurement because the sample (pH 6) is not within this higher range. However, a 3-point calibration assures maximum accuracy when the pH of the media to be monitored cannot be anticipated. Therefore, a 3-point calibration is recommended if the anticipated pH values are going to be above and below a pH of 7. If the pH of the sample water falls outside the endpoints of a 2-point calibration, start the process over and use a 3-point calibration.

Meter Calibration:

1. Turn the meter on by pressing **ON/OFF**
2. Rinse the probe with DI water.
3. If the probe was stored in storage solution, rinse probe with pH buffer 7 and then place the probe in pH 7 solution and allow to acclimate before calibrating (5 to 10 minutes).
4. Place 30 to 35 mL of pH buffer in the appropriate container. Make sure the temperature sensor is immersed.
   (Note that the first calibration point must be pH 7, but other calibration solutions can be used in any order following pH 7 calibration.).
5. Press the CALIBRATION button, scroll to select the port for the pH sensor (ISE1). Press ENTER.
6. The message line will read "Ready for point 1". Allow the pH and temperature readings to stabilize in the buffer 7. Record the pH 7 calibration point in mV. Because the pH value is temperature dependent, the pH values should be recorded in mV rather than standard units. The value should fall between -50mV and 50mV with the ideal value of 0mV.
7. Press ENTER. Message line will read "Ready for point 2" ,
8. Rinse probe with DI water. Rinse probe with second buffer solution (either pH 4 or 10).
9. Submerge sensor in second buffer solution (either pH 4 or 10). Wait for pH and temperature readings to stabilize. Press ENTER. Record the calibration point in mV. The pH 4 should be 165 to 180 mV greater than the pH 7 buffer. The pH 10 buffer should be 165 to 180 mV less than the pH 7 buffer.
10. If a 2 point calibration is conducted continue to Step 14. If a 3-point calibration is conducted, the message line will read "ready for point 3" and continue to Step 11.
11. Rinse probe with DI water. Rinse probe with remaining buffer solution not used in Step 8..
12. Submerge sensor in pH buffer solution. Allow the pH and temperature readings to stabilize. Press ENTER. Record the calibration point in mV.
13. Highlight and press ACCEPT CALIBRATION.
14. Open the GLP file. The slope should read between 55 and 60. If the slope falls outside this range then meter reconditioning is necessary. The calibration point values in mV can also be found in the GLP file.

1.9 Equipment Operation & Preparation [24]

1. The ProPlus operates on 2 C-cell batteries. Before going to the field, switch meter on using **POWER** key and check main screen display for battery charge level. Replace if charge level is low.
2. If the probe has dehydrated (left outside of the storage solution), soak for 30 minutes in a 50% pH 4 buffer/50% 1.5M KCl solution or the probe storage solution.
   - After calibrating, the probe can be stored for the short term (one day of a sampling run) in the plastic chamber with a moist sponge. Long term storage must be in buffer storage solution or pH buffer 4. Fill a small plastic rubber sleeve with buffer 4 and slip over the pH sensor.

1.10 Sample Collection

1. pH should be measured in the middle of the channel, from an area of flowing water (preferably a smooth run).
2. Place the probe in the sample/stream. Shake gentle to remove any trapped air bubbles and wait for the reading to stabilize (~60 seconds). The probe is designed to be completely immersed. Make sure the temperature sensor is submerged.
3. Record value on the field data sheet after it has stabilized (no change >0.01 pH units in 10 seconds).
4. Calibration should be completed prior to data collection. Record the result on the appropriate field data sheet. 5. After the final measurement has been made, turn the unit off and return the probe to pH 4/KCl storage solution.

1.11 Sample Handling & Preservation

Measurement <u>should</u> be performed *in situ*. However, if measurement is performed in the laboratory, collect samples in clean glass or HDPE plastic container with zero headspace. Place samples on ice.

1.12 Sample Preparation and Analysis

There is no holding time for pH; it should be measured immediately.

1.13 Troubleshooting

See owner's manuals for the appropriate meter

1.14 Data Acquisition, Calculation & Data Reduction

Not applicable

1.15 Computer Hardware & Software

Not applicable

1.16 Data Management & Records Management

1.16.1 Field Notation

All field calibration and calibration checks should be recorded on the **Sampling Episode Sheet** (see **SOP Appendix: Data Sheets**). All pH measurements made at each site should be recorded on the **Site Collection Sheet** (see **SOP Appendix: Data Sheets**). Data should be recorded following procedures outlined in the **Procedure for Completing Field Data Sheets SOP**.

1.16.2 Chain of Custody Procedure

pH should be measured in the field; therefore no Chain of Custody form is required. However, if the laboratory is going to measure pH, then follow the procedures described in the **Chain of Custody SOP and Sample Labeling SOP**.

2.0 QA/QC SECTION

2.1 Training

Training of field personnel will be done through dry run exercises in the laboratory to familiarize them with instrument operation, calibration, and maintenance. All operators are required to become familiar with the SOP document and owner's manual. Prior to solo sample collection, field personnel are evaluated in a field setting for proper use of equipment and sample collection protocol. Annual field audits are performed on sample collectors following procedures outlined in the Quality Management Plan.

2.2 Maintenance

- The unit is waterproof; however, the unit should not be submerged.
- Clean outside of unit with a moist cloth
- For long-term storage (>7 days) the probe should be stored in probe storage solution (pH 4 buffer/KCl solution). This will prevent probe dehydration— never store in DI water
- Avoid touching glass bulb.
- Refer to the owner's manual for cleaning and recharging electrode procedures.

2.3 QC Procedures

These meters should be check and calibrated against standards each quarter following procedures as directed by the QA officer at a QA and meter calibration session.

The collection of QA samples should follow the procedure specified in the **Preparation of Spike, Duplicate, and Blank Samples for Routine QA SOP**.

3.0 REFERENCES

APHA, AWWA, and WPCF (1992) Standard Methods for the Examination of Water and Wastewater, 17th edition, eds. L.S. Clesceri, A.E. Greenberg, and R.R. Trussell, American Public Health Association, Washington, D.C.

Sawyer, C.N. P.L. McCarty and G.F. Parkin (1994) Chemistry for Environmental Engineering, 4th edition, McGraw-Hill, Inc., New York, New York.

YSI Professional Plus "User Manual" (2009), YSI incorporated, Yellow Springs, Ohio.

YSI (2010) YSI Professional Plus: Calibration Tips, Yellow Spring Instruments Co. Inc., Yellow Springs Ohio.

4.0 APPENDIX A

STANDARD OPERATING PROCEDURE
Field Summary

pH Measurement

Instrument/Method Calibration
Calibration of the meter should occur prior to initial sample collection according to manufacturer specifications (YSI 2010). Record the sensor value in mV for all calibration standards used. Record the slope in mV and the % of ideal in the appropriate fields. The slope should read between 55 and 60. If the slope falls outside the acceptable range, then the probe should be reconditioned. Results of the calibration should be recorded on the **Sampling Episode Sheet**.

Calibration of the meter should involve at least a two-point bracket calibration. That is, one buffer is above the expected sample range and one buffer is below. For example, if the expected pH is 6, then the meter should be calibrated using pH 4 and 7 buffers.

Meter Calibration[24]

1. Turn the meter on by pressing **ON/OFF**
2. Rinse the probe with DI water.
3. If the probe was stored in storage solution, rinse probe with pH buffer 7 and then place the probe in pH 7 solution and allow to acclimate before calibrating (5 to 10 minutes).
4. Place 30 to 35 mL of pH buffer in the appropriate container. Make sure the temperature sensor is immersed.
   (Note that the first calibration point must be pH 7, but other calibration solutions can be used in any order following pH 7 calibration.).
5. Press the CALIBRATION button, scroll to select the port for the pH sensor (ISE1). Press ENTER.
6. The message line will read "Ready for point 1". Allow the pH and temperature readings to stabilize in the buffer 7. Record the pH 7 calibration point in mV. Because the pH value is temperature dependent, the pH values should be recorded in mV rather than standard units. The value should fall between -50mV and 50mV with the ideal value of 0mV.
7. Press ENTER. Message line will read "Ready for point 2" ,
8. Rinse probe with DI water. Rinse probe with second buffer solution (either pH 4 or 10).
9. Submerge sensor in second buffer solution (either pH 4 or 10). Wait for pH and temperature readings to stabilize. Press ENTER. Record the calibration point in mV. The pH 4 should be 165 to 180 mV greater than the pH 7 buffer. The pH 10 buffer should be 165 to 180 mV less than the pH 7 buffer.
10. If a 2 point calibration is conducted continue to Step 14. If a 3-point calibration is conducted, the message line will read "ready for point 3" and continue to Step 11.
11. Rinse probe with DI water. Rinse probe with remaining buffer solution not used in Step 8.
12. Submerge sensor in pH buffer solution. Allow the pH and temperature readings to stabilize. Press ENTER. Record the calibration point in mV.
13. Highlight and press ACCEPT CALIBRATION.
14. Open the GLP file. The slope should read between 55 and 60. If the slope falls outside this range then meter reconditioning is necessary. The calibration point values in mV can also be found in the GLP file.

Sample Collection

1. pH should be measured in the middle of the channel, from an area of flowing water (preferably in a smooth run).
2. After calibrating, remove the probe from storage chamber and place the probe in the sample/stream. Shake gentle to remove any trapped air bubbles and wait for the reading to stabilize (~60 seconds). The probe is designed to be completely immersed. Make sure the temperature sensor is submerged.
3. Record value on the field data sheet after it has stabilized (no change >0.01 pH units in 10 seconds).
4. Rinse electrode and place in the storage chamber.
5. Check a known buffer solution close to the expected value to verify calibration. If the reported value is within ±0.05 pH units, rinse and measure sample, otherwise recalibrate. Calibration checks should be conducted at least every 4 hours. Record the result on the appropriate field data sheet.
6. After the final measurement for the day has been made, turn the unit off and return the probe to pH 4 or KCl storage solution.

5.0 APPENDIX B

pH Buffer Values[2]

The following table is a list of the YSI pH buffer solutions at various temperatures

TEMPERATURE (ºC)	pH 4	pH 7	pH 10
0	4.01	7.13	10.34
5	4.00	7.10	10.26
10	4.00	7.07	10.19
15	4.00	7.05	10.12
20	4.00	7.02	10.06
25	4.01	7.00	10.00
30	4.01	6.99	9.94
35	4.02	6.98	9.90
40	4.03	6.97	9.85
50	4.06	6.97	9.78

OKLAHOMA CONSERVATION COMMISSION

WATER QUALITY DIVISION

STANDARD OPERATING PROCEDURE

PHOTODOCUMENTATION FOR BEST MANAGEMENT PRACTICES

1.0 PROCEDURAL SECTION

1.1 Scope and Application

Photographs provide qualitative and potentially quantitative records of condition at a particular location at a particular moment in time. Photos may enhance a physical description as well as allow documentation of site conditions that might influence water quality, such as an extreme algae bloom, a flood, streambank erosion, or sediment deposition. Potential sources of pollution in a stream, such as cattle in the water or a pipe discharging a substance, can also be recorded. In all of these instances, photos are data and as such need to be carefully collected and archived. However, photographs taken to document unique conditions, events, or phenomena such as those described above do not necessarily need to follow the rigid requirements of repeat photography, which is the focus of this SOP.

The goal of repeat photography is to visually document a constant view as items within that view change (Hall 2001a). Changes tracked by repeat photography can be quite useful in determining the effects of a certain land practice on an area across time. **When implementation of best management practices (BMPs) occurs, it is important to use repeat photography to document both 1) the installation of a BMP, and 2) the effects of the BMP over time.** Photos can be used to compare a site before and after installation of a BMP and to compare a site with a certain BMP to another site without the BMP.

1.2 Summary of Method

Repeat photography creates an exact method for tracking physical changes at a location of interest. By carefully mapping the layout of the study site and keeping detailed records of distances from marked camera locations to marked photo points, the procedure will allow precise replication of photographs through time. The photographic record can then be used to measure effects of BMPs on local resources and determine whether they have resulted in the desired outcome.

When taking a series of photos over time, any variation in procedure between photos (differing light or weather conditions, seasonal changes, or even a slightly different camera angle) introduces differences that reduce the comparability of photos. The primary objective of this protocol is to minimize these differences, thereby promoting more exact duplication of photos over time so that the effect of BMPs can be documented. **The only noticeable difference between photos should be the change due to the BMP** (e.g., growth of riparian vegetation after exclusion fencing).

1.3 Health and Safety Warnings

Obtain permission to access a property from the landowner prior to photographing an area. Be aware of inclement weather in the field.

1.4 Cautions

Most camera and GPS units are weather resistant but not submersible. Consult product manuals for exact specifications and tolerances. Cameras and GPS units should be protected from extreme temperatures and weather conditions.

1.5 Interference

Lens covers, smudges, or fingers on the camera lens, autofocus window, or light sensor will result in reduced picture quality. Other interferences include weak batteries, incorrect camera settings, or variation in camera settings between photos. Poorly labeled maps of the reference points and photo points will reduce precision of repeat photography attempts. Differing distances of camera to a reference point through time will limit or prohibit meaningful comparison of photos. Failure to record adequate and legible information during photodocumentation events (especially the initial visit) will result in inability to adequately reproduce photos through time. Establishing camera locations in areas which are certain to change through time (e.g., stream edge or thalweg) will limit or prevent relocation for subsequent photos. Failure to include an item of known dimension (e.g., meter stick, t-post, ball cap) in photos may limit or prevent comparison and any quantitative analysis (e.g., depth of vegetation) due to lack of scale. Large variability in time of day and season between repeat photos may limit or preclude comparisons, especially for practices that promote vegetative cover/establishment. Variability in light angle, cloud cover, background, shadows, and other contrasts between photos may limit or prevent meaningful comparisons between photos over time.

1.6 Personnel Qualification

All personnel using methods outlined in this SOP should be trained during an in-house short course or tutored by personnel who have completed the training and conducted photodocumentation.

1.7 Apparatus & Materials

The following equipment and reference material should be used:

- Digital camera
- Photo log book / data sheets
- Reference binder with map and/or aerial photos of site layout and copies of previous photos
- Batteries
- Memory card
- GPS unit
- Yardstick or other reference tool
- Measuring tape
- Operating manual for camera
- Laser range finder (optional)
- Compass (if no GPS unit)

1.8 Instrument/Method Calibration

None.

1.9 Equipment Operation

If there are any questions or problems concerning equipment used, consult the owner's manual.

1.10 Data Collection

These methods follow those established by Hall (2001a) and CARCD (2001).

1.10.1 Equipment Preparation

Camera:

All photos should be taken using a digital camera of at least 6 mega pixels. Before taking photos, personnel must ensure that the camera is set up and used in accordance with the following standards:

1. Ensure that the camera **date and time are correct**.
2. Set camera output to highest resolution JPEG image possible (i.e., large image, finest quality). Most cameras will show JPEG image quality settings of something like "low", "fine" and "superfine". This is not to be confused with image size such as "small", "medium", and "large", which relate to the pixel dimensions of the image. **For most cameras, the setting should be "large" (3072 X 2304) and "superfine" ("S").**
3. Set shooting **mode to "auto".**
4. If zoom is used, **do not go beyond the optical zoom range (indicated somewhere on the camera body; e.g., "4X optical zoom"). Do not use digital zooming!** Most cameras will zoom up to the optical zoom and then pause before continuing with digital "zoom". Digital "zoom" is nothing more than an internal enlargement of the picture at a fixed resolution. You can perform the same action in post-processing on the computer. **If possible, turn the digital zoom off.**
5. **Include in the photo something of known size for scale (e.g., meter stick, t-post, ball cap).**
6. Frame photographs so that no more than 25% of the photo height will be occupied by the sky. Try to maintain a level (horizontal) camera view.

GPS Unit:

1. Set unit to report coordinates in decimal degrees (i.e., no minutes, seconds)
2. Set unit so WAAS is enabled.
3. Set the unit so that the location is acquired in 3D and is averaged.
4. Try to achieve a location accuracy of 5 meters or less (if possible).

1.10.2 Initial Visit

Definitions:

Photo point – the location of the camera/photographer; this should be a fixed, easily located point

Reference point – a fixed object within the frame of the photograph; the object should berelatively immovable and permanent

1) ***Determine the desired subject to be photographed for change or comparison through time.*** Photos of BMPs should be taken prior to installation and just after installation to record conditions **before any improvement has occurred**. Photos should be representative of local conditions but also be taken where change is likely to be evident. For example, an area of bare soil is likely to recover and show more improvement than a thick grassy area after implementing pasture management practices. *Be aware of the goals of the project and capture images that clearly demonstrate progress towards achieving those goals.*
2) ***Select permanent features or landmarks to use as <u>photo points</u> and <u>reference points</u> in every photo*** so that the exact location can be revisited and photographed from the same perspective. A photo point on an eroding streambank or highly unstable slope is a poor choice as it will change over time. Ridgelines, barns, large trees, and rock outcroppings are relatively immovable, unchanging items that make good reference points. An elevated shot from a bridge, cliff, peak, etc. may be instrumental in conveying the full dimensions of the particular BMP.
3) ***Create a site map that indicates measurements and bearings from each photo point (camera location) to the corresponding reference points (fixed objects in the photo).*** A sketch of the property, a topographic map, or an aerial photo can be used. Mark the location of every photo point on the sketch, map, and/or photo. Also, record any special camera settings that were used (e.g., zoom magnification). Always assume that the person selecting and photodocumenting the sites during the first visit will not be the person rephotographing the area in the future. *Ensure legibility*!
4) ***Record details for each photo taken on side 2 of "Photographic Site Description and Location" data sheet:***
   a) <u>Locate the photo point using a GPS receiver.</u> Once a fixed photo point (camera location) is determined, enter coordinates on the data sheet, side 2.
   b) <u>Measure the distance and determine compass bearings (azimuth) from photo point to reference point</u> so future photographers can accurately rephotograph the area. Once this distance has been determined, it must be maintained to ensure photo comparability through time. Record the distances and bearings of photo points and reference points on the data sheet, side 2. A description of the area on this form is essential for reorientation in the future.
   c) <u>Record information for each photo separately on the information sheet</u>. Some info may remain the same. For example, multiple photos may be taken while standing at photo point "1", but each may be slightly variable (e.g., facing north versus east; zoomed in versus out; focus on tank versus fence; etc.).
5) ***Organize pictures, data sheets, maps, and other information in a field binder*** that can be carried to the site for easy reference when rephotographing the area. Print a copy of each photo taken, clearly labeled, along with a copy of the corresponding data sheet(s), and place in binder.

1.10.3 Return Visit

1) ***Review field binders frequently to plan for effective return visits*** to document progress of BMPs. Plan to take repeat photos in the same season and at about the same time of day as the original photos, unless the purpose of the photo is to show differences due to season change.
2) ***Locate the site using the information in the field binder and a GPS receiver***. Make sure to use the photograph field binder info to replicate the picture setting exactly as the initial visit photo. Ensure standard camera setup according to Section 1.10.1 and the field binder info sheet (e.g., optical zoom setting).
3) ***Make every attempt to reproduce conditions in the original photo.*** Most importantly, make certain that pictures are taken at the same distance and bearing from the photo points to reference points, as delineated on the initial visit field sheet.
4) ***Fill in return visit field sheet.*** Comments on the field sheet should include all pertinent information that will allow personnel to relocate photo stations and duplicate the time and place of the photos. Comments could include: any unusual conditions or circumstances, additional location information such as a sketch map, an added focus or subject, the use of zoom, etc. Record information for each photo separately on the back of the "Photographic Site Description and Location" data sheet. If any of the photo points or reference points change, indicate these changes in the comments section of the data sheet and sketch changed locations on site map/photo.

1.11 Troubleshooting

Some cameras reset all settings when batteries are changed. Pay attention to battery power so that a battery change does not cause problems in tracking exposure numbers. Also, make sure that there is sufficient memory on the photo card to store all photos.

The same distance between the photo point and the reference point for all subsequent photography of that particular sample is imperative in order for any analysis of change to be possible. Always measure the distance from the photo point to a reference point and record it on the data sheet.

Variability in time of day and season can be reduced by taking repeat photographs on or near the same dates at or near the same time of day. Establishing fixed dates to photograph vegetation is especially crucial to account for seasonal changes.

1.12 Data Handling & Preservation / Data Storage

Downloading Photos:

Before downloading photos for the first time, you will need to create a folder directory to store them. Create a folder for each project (e.g., Spavinaw); within this create a folder for each year (e.g., 2009); within each year, create the following folders: "**BMPs**", "**Monitoring**", "**Education**", and "**Other**".

Download photos as desired, but ensure software does not manipulate image resolution or format. Some proprietary software that comes with digital cameras has default download parameters set that are not acceptable. To standardize the method, it is best to download photos manually via the following procedure:

1. Connect camera to computer via USB cable. Turn camera on.
2. Click on "My Computer" and look for a listing of your particular camera (e.g., "Canon PowerShot A570 IS").
3. Double click on the camera listing and search the folder(s) for the photos.
4. Select all photos, click on "edit", "copy", and then paste in the appropriate folder as indicated above.

Renaming Photos:

Photo names are one of the most essential steps in the download and archiving process. Names must contain accurate and sufficient information to be readily searchable. Upon download to the appropriate folder, rename each picture in accordance with the most applicable of the following formats:

1. **If the photos were taken on a property to show BMP effectiveness:**
   YYYY.MM.DD, BMP type, photo sheet number (abbreviated project name plus the contract number), photo number. If you rename multiple photos at the same time MS Windows will automatically number them in sequence. Take care to make the photo numbers match the numbers on the photo sheet.
   Examples: 2009.04.10 pond beaty20 1 2009.10.17 ripfence IR55008 5
2. **If the photos were taken at an event:**
   YYYY.MM.DD, event description, project name, photo number. If you rename multiple photos at the same time MS Windows will automatically number them in sequence. In this case it is fine.
   Examples: 2009.04.10 farmtour beaty 1 2009.10.17 earthday grand 3
3. **If the photos were taken to document an unusual event (flood, algae bloom, etc.):**
   YYYY.MM.DD, event description, project name, photo number. If you rename multiple photos at the same time MS Windows will automatically number them in sequence. In this case it is fine.
   Examples: 2009.04.22 flood beaty 1 2009.12.06 bridgeout ncan 2

For items 2 and 3, above, it is not necessary to fill out a site sheet.

You can rename files as a batch by following these steps:

1. Open "My computer" and access the folder containing the photos.
2. Click on "View" and select "details."
3. Sort photos by current name by clicking on "name," ensuring that photos are in chronological order.
4. Left click on first photo, push and hold shift key, and left click on last photo in the series you wish to batch rename.
5. Point cursor over first photo and right click.
6. Click "rename" and input the desired name.
7. Photos should now be renamed with the desired name plus a number in parentheses indicating the correct chronological order.

General:

Scan the "Photographic Site Description and Location" data sheets into pdf format, or take a photo of the data sheets, and archive the file in the appropriate folder with the associated pictures. If photos were taken that need to be filed into two different folders, for example, BMPs and education, put a copy of the data sheet into each folder so that the info contained on the sheet is always kept with the photos. Print out one copy of each photo and the data sheet(s), and place in the appropriate binder for future reference.

Copy project photo directories of original images to the server immediately. Digital images will be maintained in a photo file on the server.

Never replace the original image! Always work on a copy of the image when editing, reformatting, or resizing.

1.13 Computer Hardware & Software

Electronic copies of digital images will be submitted on compact disk, DVD, flash drive, or downloaded directly onto the data manager's hard drive. Images will then be stored on the water quality server and backed up weekly.

1.14 Data Management & Records Management

A log of the pictures taken should be recorded in the photo data sheet. These will be submitted electronically whenever photos are submitted. In addition, hard copies of the data sheets will be kept in a binder for reference during return visits.

2.0 QA/QC SECTION

2.1 Training

All those photodocumenting BMPs will attend an in-house short course training session on the procedure.

2.2 Maintenance

- Most cameras and GPS units are weather resistant but not submersible. Do not submerge units. Refer to the operation manuals to determine whether additional precautions are necessary.
- Clean outside of units with a soft, dry cloth, removing dirt or sand from weather resistant seals.

2.3 QC Procedures

Not applicable.

3.0 REFERENCES

CARCD (California Association of Resource Conservation Districts). 2001. "Photodocumentation Procedure," in *Guidelines for Citizen Monitoring: Products of the 2000-2001 Technical Advisory Council on Citizen Monitoring*. State Water Resources Control Board.

Hall, Frederick C. 2001a. Photo point monitoring handbook: part A—field procedures. Gen. Tech. Rep. PNW-GTR-526. Portland, OR: U.S. Department of Agriculture, Forest Service, Pacific Northwest Research Station. 48 p. 2 parts.

Hall, Frederick C. 2001b. Photo point monitoring handbook: part B—concepts and analysis. Gen. Tech. Rep. PNW-GTR-526. Portland, OR: U.S. Department of Agriculture, Forest Service, Pacific Northwest Research Station. 86 p. 2 parts.

4.0 APPENDIX A

STANDARD OPERATING PROCEDURE
Repeat Photography--Field Summary

Photo point – the location of the camera/photographer; this should be a fixed, easily located point
Reference point – a fixed object within the frame of the photograph; the object should be relatively immovable and permanent

Initial Site Visit:

1) Determine the desired subject to be photographed for comparison through time based on goals of the project.
2) Select a permanent feature or landmark to use as a reference point in every photo, as well as easily located photo points.
3) Create a site map that indicates locations of photo points and reference points AND / OR mark the locations on an aerial photo or preprinted map of the property.
4) Record details for each photo taken on "Photographic Site Description and Location" data sheet:
  a) Using a GPS receiver, enter coordinates of the photo point (camera location) on the data sheet.
  b) Measure the distance and determine compass bearings from photo points to reference points and record on the data sheet.
  c) Record info for every photo taken on the data sheet, including special settings used (e.g., optical zoom).
5) Organize pictures, data sheets, maps, and other information in a field binder that can be carried to the site for easy reference when rephotographing the area.

Return Visit:

1) Review field binders frequently to plan for effective return visits to document progress of BMPs. Plan to take repeat photos in the same season and at about the same time of day as the original photos.
2) Locate the site using the information in the field binder and a GPS receiver. Make sure to use the photograph field binder info to replicate the picture setting exactly as the initial visit photo. Standard camera set up should be used, along with any special settings used to take original photo.
3) Make every attempt to reproduce conditions in the original photo (e.g., repeat distance and bearing from the photo points to the reference points).
4) Fill in return visit data sheet. If any of the photo points or reference points change, indicate these changes in the comments section of the data sheet and sketch changed locations on site map/photo. Record info for every photo taken on the back of the data sheet, including special settings used (i.e., optical zoom).

Downloading Photos:

Download photos to preloaded folders on hard drive (e.g., C:\Spavinaw\2009\BMPs\). Users may download manually via the following procedure: 1) connect camera to computer via USB cable (camera must be on), 2) click on "My Computer" and look for a listing of your particular camera, 3) search the folder(s) for the photos, and 4) select all photos, click on "edit", "copy", and then paste in the appropriate folder.

Renaming Photos:

Upon download to the appropriate folder, rename each picture in accordance with the most applicable of the following format examples: *BMPs example:* 2009.10.17 ripfence IR55008 5; *Education example:* 2009.04.10 farmtour beaty 1; *Unusual event example:* 2009.12.06 bridgeout ncan 2

General:

Scan the "Photographic Site Description and Location" data sheets into pdf format, or take a photo of the data sheets, and archive in the appropriate folder with the associated pictures. Print out one copy of each photo, and place in the appropriate binder along with the data sheet(s) for future reference.

5.0 APPENDIX B: FORMS

Photo Sheet # _____

PHOTOGRAPHIC SITE DESCRIPTION AND LOCATION

Project _____ County _____

Location Name / Description_____

Legal description of property _____

GPS Coordinates of each photo point:

Comments:

Sketch property below or attach an aerial photo or a topographic map of the property. Mark general locations of photo points and number them. If there are any changes from earlier visits, indicate these clearly and describe in the comments section above.

Project _____ Location Name _____

Photo #	Photo Point #	Date (mo/da/year)	Description of Photo Point (place where photographer is standing) (Ex: large willow tree, SW corner of fence)	Description of Reference Point (fixed object within photo) (Ex: barn, boulder, osage orange tree)	Subject of Photo (what is being photographed) (Ex: riparian area, pasture, heavy use area, etc.)	Compass Bearing to Subject (direction facing when take photo)	Distance from Photo Point to Reference Point	Comments (include photographer name)

OKLAHOMA CONSERVATION COMMISSION
WATER QUALITY DIVISION

STANDARD OPERATING PROCEDURE

PHOTODOCUMENTATION TO SUPPORT WATER QUALITY MONITORING

1.0 PROCEDURAL SECTION

1.1 Scope and Application

Environmental monitoring can be reinforced through documentation of specific circumstances at sites with photography. Photographs create a record by preserving a moment in time and enhance a physical description. In the case of biological collections, the number of specimens that must be kept can be decreased by carefully photographing the organism and releasing it. Storage of photographs requires less processing and uses less space.

Subject matter for photodocumentation consists of the following:

- **Site:** upstream and downstream pictures taken each site visit
- **Land use practices** adjacent to the site taken both when sampling is initiated and when there are significant changes in land use. These changes include crop rotation, building, channel alterations, and other factors that might affect water quality.
- **Sampling methods**
- **Problems/complaints**
- **Fish:** Be sure scales can be counted and appropriate fins can be seen. For fish, lay fish on paper that already represents site name, county, site date and time, WBID #, and the type of fish. Lay ruler on paper for scaling purposes. Take pictures of all species released (e.g. 1 green sunfish picture out of 75 caught) and every rare individual (e.g. 3 bowfin pictures for 3 bowfins caught).

1.3 Summary of Method

Pictures of fish, sites, land use practices, sampling methods, and problems at sites will be documented photographically. The photographs will be stored both on computer hard drive and on the OCC server for use in reports and presentations.

1.3 Health and Safety Warnings

None

1.4 Cautions

Most units are weather resistant but not submersible. However, not all cameras are weather resistant. Refer to the camera manual for additional information. Generally, however, cameras should be protected from extreme temperatures and weather conditions.

1.5 Interference

Lens covers, smudges, or fingers on the camera lens, auto focus window, or light sensor will result in reduced picture quality. Other interferences include old batteries, incorrect camera settings, or extreme light conditions may affect the quality of photographs.

1.6 Personnel Qualification

All personnel will be evaluated on method during the field audit.

1.7 Apparatus & Materials

The following equipment and reference material should be used.

- Camera
- Batteries
- Memory card
- Operating manual for camera

1.8 Instrument/Method Calibration

None

1.9 Equipment Operation

You will be using a digital 35 mm camera. If you have any questions, consult your owner's manual.

1.10 Sample Collection

Setup

1. Ensure camera date and time are correct.
2. Set shooting mode to "auto".
3. Set camera output to highest resolution JPEG image possible (i.e., largest image size, finest quality). Once you select this, the setting should remain until you change it or the camera gets reset for some reason. For most cameras, the setting should be "large" (3072X2304) and "superfine" ("S").

   E.g., Olympus Stylus 1030SW:
   1) power on
   2) ensure "auto" mode is selected
   3) press the "OK/FUNC" button; select "10M" (i.e., image size of 3648X2736) and then "FINE"

Taking photos (General)

1. Compile a site description sheet with the following:

CREEK NAME WBID DATE

2. Photograph the site description sheet (ensure legibility).
3. Take photos both upstream and downstream at each site visit. When photographing something else, be sure to include something of known size for scale.
4. Repeat procedure at each creek monitored.

Taking photos (Fish Collection)

1. Compile a site description sheet with the following:

CREEK NAME WBID DATE

2. Photograph the site description sheet (ensure legibility).
3. Take an upstream and a downstream photo at the start point of the collection activities (be sure to include something of known size for scale).
4. Take a photo of each individual fish as necessary and include a backdrop including the site name, WBID# and date (can use the same sheet used as the site identifier).
5. Take an upstream and a downstream photo at the end point of the collection activities (be sure to include something of known size for scale).

Repeat procedure at each creek monitored.

1.11 Troubleshooting

Some cameras reset all settings when batteries are changed. Pay attention to battery power so that a battery change does not cause problems in tracking exposure numbers. Also, make sure that there is sufficient memory on the photo card to store all photos.

1.12 Sample Handling & Preservation/Data Storage

Setup

Before downloading photos for the first time, you will need to create a folder to store them on your hard drive. Create a folder for photos and, within this folder, create one folder for each site

Site folder: site name WBID; *example:* Bokchito OK410600-01-0090G

Name Date: Site name YYYY.MM.DD

Save the new photos in this file C:\Photos\Site name WBID\Date

Example: C:\Photos\Bokchito OK410600-01-0090G\Bokchito 2015.05.05\

Downloading photos

To standardize the method, it is best to download photos manually via the following procedure:

1. Turn on camera and select "play" mode.

2. Connect camera to computer via USB cable provided with your camera and wait for computer to connect with it. For the Olympus, push "OK/FUNC" to enter PC mode, then push "OK/FUNC" once more.
3. Click on "My Computer" and look for a listing of your particular camera (e.g., "Canon PowerShot A570 IS"). For the Olympus, you will look for "removable disk".
4. Double click on the camera listing and search the folder(s) for the photos. For the Olympus, drill down through the two folders to the pictures.
5. Select all photos, click on "edit", "copy", and then paste in the appropriate folder as indicated above.

Renaming photos

Photo names are one of the most essential steps in the download and archiving process. It is essential to rename photos according to the following nomenclature: site name county last letter of the WBID followed by a brief description.

Examples: Skeleton Lower Logan F upstream; Cimarron East Cimarron G cow trails

You can rename files in a batch, instead of one at a time, by following these steps:

1. Open "My computer" and access the folder containing the photos
2. Click on "View" and select "details".
3. Sort photos by current name by clicking on "name", ensuring that photos are in chronological order.
4. Left click on first photo, push and hold shift key, and left click on last photo in the series you wish to batch rename.
5. Point cursor over first photo and right click.
6. Click "rename" and input the desired name.
7. Ensure photos are named in the correct chronological order.

Data storage/submittal

Photo files should be stored in duplicate, one on your hard drive and the second on CD or the OCC server. ***At least quarterly,*** one copy of each photo should be stored on the OCC server. Copies can be submitted on compact disk, DVD, flash drive, or downloaded directly onto the data manager's computer. The second copy should remain in your records. Digital images will be maintained in a photo file on the OCC server:

Example: J:\Water Quality\Pictures\Streams\Cypress OK410210-01-0070\Cypress 2015.07.02.

1.13 Computer Hardware & Software

Electronic copies of digital images will be stored on the water quality server and backed up weekly.

1.14 Data Management & Records Management

Never replace the original image! Always work on a copy of the image when editing, reformatting, or resizing. Maintain a copy of all photos in your records.

2.0 QA/QC SECTION

2.1 Training

All users will be evaluated on procedures during the field audit.

2.2 Maintenance

- Most cameras are weather resistant, but not submersible, do not submerge unit. Refer to the camera operation manual to determine whether additional cautions are necessary.
- Clean outside of unit with a soft, dry cloth, removing dirt or sand from weather resistant seals.
- Replace batteries as needed.

2.3 QC Procedures

Not applicable

4.0 APPENDIX A

STANDARD OPERATING PROCEDURE
Field Summary

Scope and Application
Subject matter for photodocumentation consists of the following:

- **Site:** upstream and downstream pictures taken each site visit
- **Land use practices** adjacent to the site taken both when sampling is initiated and when there are significant changes in land use. These changes include crop rotation, building, channel alterations, and other factors that might affect water quality.
- **Sampling methods**
- **Problems/complaints**
- **Fish:** Be sure scales can be counted and appropriate fins can be seen. For fish, lay fish on paper that already represents site name, county, site date and time, WBID #, and the type of fish. Lay ruler on paper for scaling purposes. Take pictures of all species released (e.g. 1 green sunfish picture out of 75 caught) and every rare individual (e.g. 3 bowfin pictures for 3 bowfins caught).

Sample Collection
In-Field:
Make sure to check "Photodocumentation" on the site collection sheet. Repeat procedure at each creek monitored

Setup

1. Ensure camera date and time are correct.
2. Set shooting mode to "auto".
3. Set camera output to highest resolution JPEG image possible (i.e., largest image size, finest quality). Once you select this, the setting should remain until you change it or the camera gets reset for some reason. For most cameras, the setting should be "large" (3072X2304) and "superfine" ("S").

   E.g., Olympus Stylus 1030SW:
   1) power on
   2) ensure "auto" mode is selected
   3) press the "OK/FUNC" button; select "10M" (i.e., image size of 3648X2736) and then "FINE".

Taking photos (General)

1. Compile a site description sheet with the following:

CREEK NAME WBID DATE

2. Photograph the site description sheet (ensure legibility).
3. Take photos (be sure to include something of known size for scale).
4. Repeat procedure at each creek monitored.

Taking photos (Fish Collection)

1. Compile a site description sheet with the following:

CREEK NAME WBID DATE

2. Photograph the site description sheet (ensure legibility).
3. Take an upstream and a downstream photo at the start point of the collection activities (be sure to include something of known size for scale).
4. Take a photo of each individual fish as necessary and include a backdrop including the site name, WBID# and date (can use the same sheet used as the site identifier).
5. Take an upstream and a downstream photo at the end point of the collection activities (be sure to include something of known size for scale).

Office:

Setup

Before downloading photos for the first time, you will need to create a folder to store them on your hard drive. Create a folder for photos and, within this folder, create one folder for each site

Site folder: site name WBID; *example:* Bokchito OK410600-01-0090G

Name Date: Site name YYYY.MM.DD

Save the new photos in this file C:\Photos\Site name WBID\Date

Example: C:\Photos\Bokchito OK410600-01-0090G\Bokchito 2015.05.05\

Downloading photos

To standardize the method, it is best to download photos manually via the following procedure:

1. Turn on camera and select "play" mode.
2. Connect camera to computer via USB cable provided with your camera and wait for computer to connect with it. For the Olympus, push "OK/FUNC" to enter PC mode, then push "OK/FUNC" once more.
3. Click on "My Computer" and look for a listing of your particular camera (e.g., "Canon PowerShot A570 IS"). For the Olympus, you will look for "removable disk".
4. Double click on the camera listing and search the folder(s) for the photos. For the Olympus, drill down through the two folders to the pictures.
5. Select all photos, click on "edit", "copy", and then paste in the appropriate folder as indicated above.

Renaming photos

Photo names are one of the most essential steps in the download and archiving process. It is essential to rename photos according to the following nomenclature: site name county last letter of the WBID followed by a brief description.

Examples: Skeleton Lower Logan F upstream; Cimarron East Cimarron G cow trails

You can rename files in a batch, instead of one at a time, by following these steps:

1. Open "My computer" and access the folder containing the photos.
2. Click on "View" and select "details".
3. Sort photos by current name by clicking on "name", ensuring that photos are in chronological order.
4. Left click on first photo, push and hold shift key, and left click on last photo in the series you wish to batch rename.
5. Point cursor over first photo and right click.
6. Click "rename" and input the desired name.
7. Ensure photos are named in the correct chronological order.

Data storage/submittal

Photo files should be stored in duplicate, one on your hard drive and the second on CD or the OCC server. ***At least quarterly,*** one copy of each photo should be stored on the OCC server. Copies can be submitted on compact disk, DVD, flash drive, or downloaded directly onto the data manager's computer. The second copy should remain in your records. Digital images will be maintained in a photo file on the OCC server:

Example: J:\Water Quality\Pictures\Streams\Cypress OK410210-01-0070\Cypress 2015.07.02\Photo

OKLAHOMA CONSERVATION COMMISSION
WATER QUALITY DIVISION

STANDARD OPERATING PROCEDURE

PRO PLUS MULTI-PARAMETER METER

FOR

DISSOLVED OXYGEN, CONDUCTIVITY, pH, and TEMPERATURE MEASUREMENT

(YSI Quatro Professional Series Meter)

1.0 PROCEDURAL SECTION

1.1 Scope and Application:

Dissolved oxygen: The measure of dissolved oxygen (DO) is an expression of the soluble oxygen concentration in terms of mass per unit volume (e.g. mg/L). In theory, at any given temperature, altitude, P_{O2}, and ionic strength the concentration of oxygen can be calculated based on Henry's law. However, in the aquatic environment, the DO concentration is influenced by physical, chemical, and biological factors. Subsequently, the measurement of DO should be conducted under field conditions. If DO values fall outside of a specified range, predawn measurements may be collected.

Conductivity: Conductivity is a numerical expression of the ability of an aqueous solution to carry an electrical current. This ability depends on the presence of ions, their total concentration, mobility, valence, and relative concentrations, and on the temperature of measurement. Solutions of most inorganic acids, bases, and salts are relatively good conductors while organic compounds that do not dissociate are poor conductors. A measure of the ability of water to conduct an electrical current as measured using a 1 cm cell and expressed in units of electrical conductance, i.e., microsiemens (µS or µmho) at 25° C. Specific conductance is related to the type and concentration of ions in solution and can be used for approximating the total dissolved solids (TDS) content of water by testing its capacity to carry an electrical current. For comparison, the specific conductance of seawater is approximately 50,000 µS, which is equivalent to a TDS concentration of about 35,000 milligrams per liter (mg/l). Physical measurement of conductivity is measured in terms of resistance. Customarily conductivity is reported as micromhos per centimeter (µmhos/cm). The SI unit is siemens (S) and is reported as millisiemens per meter (mS/cm) (1 Siemens = 1 mhos).

pH: The measure of pH is an expression of the hydrogen-ion concentration in terms of its negative log. At any given temperature the intensity of the acidic or basic character of a solution is indicated by pH. The measurement of pH assumes that the molar concentration of $[H^+]$ equals $[OH^-]$ in pure water; which serves as the basis of the pH scale (0-14).

Temperature: Temperature readings are used in the study of saturation and stability with respect to calcium carbonate, in the calculation of salinity, and determination of theoretical oxygen solubility, and several other calculations. In limnological studies, water temperature as a function of depth is often required. Elevated temperatures resulting from discharges of heated water may have significant ecological effects as related to state standards.

1.2 Summary of Method

Dissolved oxygen: The YSI Pro Plus galvanic DO probe is an electrochemical sensor. "Electrochemical sensors consist of an anode and a cathode that are confined in electrolyte solution by an oxygen permeable membrane. Oxygen molecules that are dissolved in the sample diffuse through the membrane to the sensor at a rate proportional to the pressure difference across it. The oxygen molecules are then reduced at the cathode producing an electrical signal that travels from the cathode to the anode and then to the instrument. Since oxygen is rapidly reduced or consumed at the cathode, it can be assumed that the oxygen pressure under the membrane is zero. Therefore, the amount of oxygen diffusing through the membrane is proportional to the partial pressure of oxygen outside the membrane" (YSI, 2009).

It is important to recognize that oxygen dissolved in the sample is consumed during the measurement with a steady-state electrochemical sensor. This results in a measurement that is dependent on flow. It is therefore essential that water flows through the sensor tip, which can be achieved by manual agitation of the probe if natural flow is too low. If stagnation occurs, the readings will be artificially low. Electrochemical dissolved oxygen measurements are also affected by barometric pressure and the temperature and salinity of the water.

The YSI galvanic sensor is composed of a silver cathode and a zinc anode. The galvanic sensor does not have or need constant voltage applied to it since the electrodes are dissimilar enough to self-polarize and reduce oxygen molecules without an applied voltage. A galvanic dissolved oxygen system uses a meter to read the electrical signal coming back from the probe, and this signal is proportional to the amount of oxygen passing through the membrane. Oxygen passing through the membrane and being reduced at the cathode increases the electrical signal (current) read by the probe. As oxygen increases the signal increases, and as oxygen decreases the signal decreases. Chemically, this is described as the oxidation of the zinc and reduction of oxygen at the silver cathode as follows:

Zinc Anode reaction: $2Zn \rightarrow 2Zn^{2+} + 4e^-$
Silver Cathode reaction: $O_2 + 2H_2O + 4e^- \rightarrow 4OH^-$
Overall reaction: $O_2 + 2H_2O + 2Zn \rightarrow 2Zn(OH)_2$

The electrodes are immersed in an electrolyte solution and separated from the test solution by the membrane. The membrane allows oxygen and some other gases to pass across the membrane, which reacts with the anode resulting in an electrical current. Oxygen passes across the membrane at a rate proportional to the pressure difference. Oxygen is consumed at the cathode, thus

the oxygen pressure inside the membrane is zero. The rate of oxygen transfer across the membrane is proportional to the absolute pressure outside the membrane (more oxygen, more pressure, more current, higher DO reading). In summary, the diffusion current is measured, which is linearly proportional to concentration of dissolved oxygen (Csuros, 1994).

Conductivity: The YSI conductivity sensor measures conductivity by AC voltage applied to nickel electrodes. These electrodes are placed in a water sample, where the current flows through the electrodes and the sample. The charge on ions in solution facilitates the conductance of electrical current, so the conductivity of a solution is proportional to its ion concentration. The basic unit of conductivity is the siemens (S), sometimes referred to as mho, corrected to 25° C.

Definitions

- Conductivity — A measurement of the conductive material in the liquid sample without regard to temperature.
- Specific Conductance — Temperature compensated conductivity which automatically adjusts the reading to a calculated value which would have been read if the sample had been at 25°C
- Siemens (S) — The reciprocal of ohm in the International System of Units (SI)
- Mho — The reciprocal of ohm in English units

pH: Use of the term pH assumes that the activity of the hydrogen ion is being considered. When pH is measured using a probe, the hydrogen activity is being measured, not actually the molar concentration. Activity is measured by potentiometric measurement using a standard hydrogen electrode and a reference electrode. For a more complete discussion of the potentiometric measurement, refer to Standard Method 4500 (APHA *et al*., 1992).

Definitions

pH = -log [H] where [H] = hydrogen ion concentration (mols/L)

Temperature: Temperature measurements with the YSI Pro Plus meter are accomplished with a high-precision thermistor sensor. The resistance of the thermistor changes with temperature. The resistance is converted to temperature using an algorithm.

1.3 Health and Safety Warnings

- Buffer solutions contain chemicals that should be treated with respect. Avoid inhalation, skin contact, eye contact or ingestion.
  - Inhalation may cause severe irritation and be harmful.
  - Skin contact may cause irritation and prolonged or repeated exposure may cause dermatitis.
  - Eye contact may cause irritation or conjunctivitis.
  - Ingest may cause nausea, vomiting and diarrhea.

1.4 Cautions

- Do not store the probe dry
- Make sure the automatic temperature compensation probe is working correctly and the sensor is immersed in the sample/buffer
- Allow the sensors time to stabilize with regard to temperature before reading

1.5 Interference

- It is essential that flow is present at the sensor tip. If stagnation occurs, the DO readings will be artificially low. If enough sample movement is not supplied by the natural flow of the medium or manual agitation of the sensor by the user, then the sensor will continue to deplete oxygen at the membrane surface which will result in artificially low DO readings.
- Organic compounds (e.g., petroleum products) are poor conductors and can foul the DO membrane; avoid contacting oil films with the probe.
- Submerge the conductivity probe below the vent holes. The chamber should be free of trapped air. Watch for fouling of the vents with sediment. It may be necessary to adjust the probe's position in the stream to prevent sediment from entering the vents.

1.6 Personnel Qualification

Field personal must be trained and evaluated on the use of equipment prior to collecting samples or data. Use of the equipment is subject to approval by the QA Officer and/or the Environmental Monitoring Coordinator. Training will be done through dry run exercises in the laboratory and field to familiarize field personnel with operation/collection, calibration and maintenance. Investigators must be familiar with the SOP document and owner's manual, when applicable.

1.7 Apparatus & Materials

- YSI Quattro Professional Series "Pro Plus" Multi-Parameter Meter

1.8 Instrument Calibration

YSI sensors should be calibrated daily prior to sampling. Since the accuracy of all sensor measurements depends on temperature, the temperature sensor must be checked for accuracy first. The temperature sensor and an NIST thermometers should be reading within 0.5 °C, the combined accuracy of the YSI sensor (+/- 0.2 °C) and the NIST thermometer (+/- 0.3 °C). If temperature calibration check fails, sensor reconditioning may be necessary. The conductivity sensor should be checked next and calibrated if necessary following the instructions below. The pH and DO sensors should be calibrated daily prior to sampling following the instructions below. The functioning of all sensors should be checked against known standards each quarter following procedures specified by the QA officer. Consult the QA Officer for instructions on solving problems identified during QA/QC.

Conductivity: Conductivity calibration should be checked daily prior to commencing sampling activities, but should rarely require calibration. The conductivity standard, sensor-measured conductivity and difference should be recorded. If the sensor is reading outside the greater of 10 uS/cm or 1% off the standard solution then calibration is necessary. Calibration should be completed as specific conductance. Following calibration the sensor reading and the cell constant should be recorded. The cell constant can be found in the GLP file. If the cell constant falls outside 4 to 6 then reconditioning is necessary. The conductivity probe also houses the temperature probe, and if this probe does not function, all of the other sensor readings will be replaced with question marks (????). Refer to manual to troubleshoot problem.

pH: Calibration of the meter should occur prior to initial sample collection according to manufacturer specifications (YSI 2010). The meter must be calibrated before making pH measurements. Calibration may be performed at 1, 2, or 3 points. For OCC purposes the meter calibration meter should involve at least a two-point bracket calibration. That is, one buffer is above the expected sample range and one buffer is below. For example, if the expected pH is 6, then the meter should be calibrated using pH 4 and 7 buffers. A 3-point calibration with a pH 10 buffer does not increase the accuracy of this measurement because the sample (pH 6) is not within this higher range. However, a 3-point calibration assures maximum accuracy when the pH of the media to be monitored cannot be anticipated. Therefore, a 3-point calibration is recommended if the anticipated pH values are going to be above and below a pH of 7. If the pH of the sample water falls outside the endpoints of a 2-point calibration, start the process over and use a 3-point calibration.

1. Turn the meter on by pressing **ON/OFF**
2. Rinse the probe with DI water.
3. If the probe was stored in storage solution, rinse probe with pH buffer 7 and then place the probe in pH 7 solution and allow to acclimate before calibrating (5 to 10 minutes).
4. Place 30 to 35 mL of pH buffer in the appropriate container. Make sure the temperature sensor is immersed.
   (Note that the first calibration point must be pH 7, but other calibration solutions can be used in any order following pH 7 calibration.).
5. Press the CALIBRATION button, scroll to select the port for the pH sensor (ISE1). Press ENTER. .
6. The message line will read "Ready for point 1". Allow the pH and temperature readings to stabilize in the buffer 7. Record the pH 7 calibration point in mV. Because the pH value is temperature dependent, the pH values should be recorded in mV rather than standard units. The value should fall between -50mV and 50mV with the ideal value of 0mV.
7. Press ENTER. Message line will read "Ready for point 2" ,
8. Rinse probe with DI water. Rinse probe with second buffer solution (either pH 4 or 10).
9. Submerge sensor in second buffer solution (either pH 4 or 10). Wait for pH and temperature readings to stabilize. Press ENTER. Record the calibration point in mV. The pH 4 should be 165 to 180 mV greater than the pH 7 buffer. The pH 10 buffer should be 165 to 180 mV less than the pH 7 buffer.
10. If a 2 point calibration is conducted continue to Step 14. If a 3-point calibration is conducted, the message line will read "ready for point 3" and continue to Step 11.
11. Rinse probe with DI water. Rinse probe with remaining buffer solution not used in Step 8.
12. Submerge sensor in pH buffer solution. Allow the pH and temperature readings to stabilize. Press ENTER. Record the calibration point in mV.

13. Highlight and press ACCEPT CALIBRATION.
14. Open the GLP file. The slope should read between 55 and 60. If the slope falls outside this range then meter reconditioning is necessary. The calibration point values in mV can also be found in the GLP file.

Dissolved oxygen: Calibration of the meter should occur prior to initial sample collection according to manufacturer recommendations (YSI 2010). The galvanic DO sensor does not require "warm-up" time. The instrument is ready to measure when it is powered on and, therefore, users are not required to wait to calibrate or to take readings. If following calibration, the DO value deviates by more than 5% of theoretical or the sensor current falls outside acceptable range (4.31 to 8 uA), re-calibration should be conducted. Results of the calibration check should be recorded on the appropriate field data sheet.

Steady-state electrochemical sensors require a calibration each day they are used. Temperature and salinity are compensated for during instrument calibration. The most significant variable for dissolved oxygen measurements is temperature; therefore, it is important to ensure the temperature sensor on the instrument is measuring accurately.

Calibration of the meter requires the altitude of the region in which samples are taken, along with the salinity of the water. There are three basic techniques for calibration—Winkler titration, air-saturated water, and water-saturated air. The water-saturated air method is recommended by YSI and is described below.

1. Check the integrity of the membrane. Look for air bubbles, wrinkles, or desiccated membrane. Change membrane and fluid if needed; refer to owner's manual.
2. Membrane life depends on usage. The average replacement interval is two to four weeks.
3. Place probe in air saturated with water.
4. Ensure that the probe is in the calibration cup with a small amount of water and several of the threads of the cup engaged. The goal is to have air exchange between inside and outside of the calibration cup
5. Turn the meter on by pressing the power button.
6. Make sure there are no water droplets on the DO membrane or temperature sensor.
7. Press the CAL button. Highlight the DO probe, press enter. Highlight DO % and press enter.
8. The instrument will use the internal barometer during calibration and will display this value in brackets at the top of the display. Highlight barometer and adjust it if needed.
9. Wait for the temperature and the DO% values under "actual readings" to stabilize. Then highlight Accept Calibration and press enter to calibrate.
10. Open the GLP file and record the sensor current. The sensor current should fall between 4.31 and 8 uA. If the sensor current falls outside this range sensor reconditioning may be necessary.

1.9 Equipment Operation & Preparation [2]

The YSI Pro Plus meter uses two C batteries. Before going to the field, switch meter on and check for battery strength. There is a battery life indicator on the main screen. Time and date will need to be reset each time the batteries are replaced.

Galvanic DO membranes (yellow cap) should be replaced every month or when white film appears around edge.

- Membrane solution should be prepared according to bottle instructions.
- Turn on the instrument and wait approximately 5-15 minutes for the storage container to become completely saturated and to allow the sensors to stabilize.

1.10 Sample Collection

After calibrating, remove the probe from storage chamber and place the probe in the sample/stream. Shake gentle to remove any trapped air bubbles and wait for the reading to stabilize (~60 seconds). The probe is designed to be completely immersed. Make sure the temperature sensor is submerged. All parameters should be measured in the middle of the channel where there is flow, not from a stagnant area. When possible samples should be collected in reaches having uniform flow (runs), and having a uniform and stable bottom contour, and where constituents are well mixed. These areas often occur just upstream of riffles. Sampling should be sited far enough above and below confluences of streamflow or point sources of contamination to avoid sampling a cross section where flows are poorly mixed or not unidirectional. Samples should be collected in reaches upstream from bridges or other structures, to avoid contamination from the structure or from a road surface. Additionally grab samples should be collected in a reach where other data are collected (dissolved oxygen, temperature, pH, conductivity, alkalinity, hardness, turbidity, and flow).

Record values on the field data sheet after it has stabilized (no change >0.01 pH units in 10 seconds).

Rinse probe and place in the storage chamber. Do not store with the dissolved oxygen membrane submerged in deionized water. Always store bulkhead with sensors in the plastic cap with moist sponge. Deionized water is recommended for the sponge, as bacterial growth on the sponge may consume oxygen and interfere with the calibration.

1.11 Sample Handling & Preservation

Measurement should be performed *in situ*. However, if measurement is performed in the laboratory, collect samples in clean glass or HDPE plastic container with zero headspace. Place samples on ice.

1.12 Sample Preparation and Analysis

There is no holding time for DO, conductivity, pH, or temperature; it should be measured immediately.

1.13 Troubleshooting

See owner's manual.

1.14 Data Acquisition, Calculation & Data Reduction

Not applicable

1.15 Computer Hardware & Software

Not applicable

1.16 Data Management & Records Management

1.16.1 Field Notation

All field calibration and calibration checks should be recorded on the **Sampling Episode Sheet** (see **SOP Appendix: Data Sheets**). All measurements made at each site should be recorded on the **Site Collection Sheet** (see **SOP Appendix: Data Sheets**). Data should be recorded following procedures outlined in the **Procedure for Completing Field Data Sheets SOP**.

1.16.2 Chain of Custody Procedure

All parameters should be measured in the field; therefore no Chain of Custody form is required. However, if the laboratory is going to measure pH, then follow the procedures described in the **Chain of Custody SOP and Sample Labeling SOP**.

2.0 QA/QC SECTION

2.1 Training

Training of field personnel will be done through dry run exercises in the laboratory to familiarize them with instrument operation, calibration, and maintenance. All operators are required to become familiar with the SOP document and owner's manual. Prior to solo sample collection, field personnel are evaluated in a field setting for proper use of equipment and sample collection protocol. Annual field audits are performed on sample collectors following procedures outlined in the Quality Management Plan.

2.2 Maintenance

- The unit is waterproof; however, the unit should not be submerged.
- Clean outside of unit with a moist cloth.
- Replace DO probe membrane at least every month, or when white film appears around the edge.
- Refer to the owner's manual for cleaning and recharging electrode procedures.

2.3 QC Procedures

These meters should be checked and calibrated against standards each quarter following procedures as directed by the QA officer at a QA and meter calibration session. Values will be recorded in the equipment logbook.

The collection of QA samples should follow the procedure specified in the **Spike, Duplicate, and Blank Samples/Measurements for Routine QA SOP**. Results will be recorded in the field notebook.

3.0 REFERENCES

APHA, AWWA, and WPCF (1992) Standard Methods for the Examination of Water and Wastewater, 17th edition, eds. L.S. Clesceri, A.E. Greenberg, and R.R. Trussell, American Public Health Association, Washington, D.C.

YSI (2009). The Dissolved Oxygen Handbook. YSI Incorporated. www.ysi.com/weknowdo

YSI (2009). Professional Plus User Manual. YSI Incorporated.

Sawyer, C.N. P.L. McCarty and G.F. Parkin (1994) Chemistry for Environmental Engineering, 4th edition, McGraw-Hill, Inc, New York, New York.

OKLAHOMA CONSERVATION COMMISSION
WATER QUALITY DIVISION

STANDARD OPERATING PROCEDURE

REAGENTS AND STANDARDS SHELF-LIFE

1.0 PROCEDURAL SECTION

1.1 Scope and Application

Reagents and standards used in the analysis of environmental samples do not have an infinite life. Almost all of these substances will degrade beyond an acceptable level after which they should be disposed of properly. The difficult part is trying to discern what this period is. Some reagents have a listed shelf-life which makes this easy to discern; however, many do not have a listed expiration date.

1.2 Procedure

1. All reagents and standards containers should be labeled with the date received.

2. All of the containers should be re-dated when first opened.

3. The Q.A. Officer will determine the shelf-life of reagents and standards which are not labeled by the manufacturer.

4. Many standards and reagents have different shelf lives after opening than they do when unopened. Also, high temperature, or exposure to light or humidity may shorten shelf life. Store chemicals according to accepted practices or as specified by the manufacturer.

5. No reagent or standard shall be used after the expiration date.

6. Any reagent or standard that takes on a different appearance, such as a color change or the presence of particulate matter, should be discarded.

7. All reagents and standards should be disposed of in an appropriate manner. If you have questions, consult the Material Safety Data Sheet (MSDS) or the analytical laboratory (e.g. the ODAFF Laboratory).

SAFETY GUIDELINES FOR FIELD RESEARCHERS:
Health and Safety in the Field

May 2020

This document outlines the minimum health and safety requirements for field activities held under the auspices of the Oklahoma Conservation Commission (OCC), Water Quality Division.

RESPONSIBILITIES

All participants in OCC field activities have the responsibility to ensure their own safety and the safety of others by participating in field activities in a safe and competent manner. Each OCC staff member participating in field activities must comply with the health and safety guidelines as detailed in this document.

Field supervisors / crew leaders have additional responsibilities, including:
Ensure that the safety guidelines are reviewed with interns and crew members before the commencement of the summer field season.
Provide a copy of the safety guidelines to each intern and crew member.
Follow these guidelines and ensure that crew members follow them as well.
Report injuries / accidents that occur in the field.

A. Before You Leave

One of the most important phases of your fieldwork experience is planning and preparation *before* you leave.

1. **Review Safety Guidelines**--At least annually, each OCC field staffer must read these safety guidelines. Of particular importance is a review of ***Table 1: Physical and Environmental Hazards***, below. This table identifies potential hazards which may be encountered in field activities and describes some typical symptoms to watch for and ways to prevent these events. Becoming familiar with this table may minimize the risk associated with each hazard.
2. **Restock First Aid Kit**--The contents of first aid kits must be reviewed at least annually and restocked as necessary. **A first aid kit must remain in each field vehicle at all times.**
3. **Take Red Cross Classes**--Field staff are required to be certified in Red Cross CPR annually. Red Cross First Aid certification must be achieved at least every three years.
4. **Update Emergency Beacon--**Register your emergency beacon every year. Update emergency contacts as necessary. Perform necessary tests of functionality in accordance with manufacturer's instructions. It is vital to **familiarize yourself with how to use the beacon** in case of an emergency.
5. **Update Tetanus Vaccination--**A tetanus vaccination should be updated at least every 10 years. If in doubt, get one. Free vaccinations are available at the Health Department.
6. **Allergy or Medical Condition Alert** --Notify your supervisor and/or coworkers of any allergies or medical conditions that may lead to potentially life-threatening scenarios (i.e., bee stings, food reactions, poison ivy, diabetes, asthma). Bring appropriate medication to take in the event of a reaction.
7. **Check vehicle--**All vehicles must be checked regularly to ensure that they are roadworthy and that they contain oil, water, fuel, spare tire (inflated), car manual, and tire changing equipment. In addition, each vehicle should have an "Accident Information Form" and a Roadside Assistance card in the glove box.
8. **Prepare and Submit a Safety Plan**--Before beginning a new monitoring run, prepare a safety plan and submit a copy to your supervisor and the Quality Assurance Officer. A copy of the safety plan should also remain in each vehicle. Interns must be made aware of the location of the safety plan and contact numbers. Multiple trips to the same location can be covered by a single Safety Plan. If any changes are made to your run, both the supervisor and the QA Officer should be notified. **A safety plan must include the following:**
   - A) **<u>Itinerary</u>**:
     - *i.* Describe the location of each monitoring site, including driving directions to the site. Provide a lat/long where possible.
     - *ii.* Include dates that each site will be visited. If a scheduled visit must be changed, the supervisor and the QA Officer should be notified of the new schedule, either by email or phone.
     - *iii.* Include approximate times that each site visit will be initiated. If the order of site visits changes, notify Stacy and Jason by email or phone, as possible.
   - B) **<u>Contact Person:</u>** Provide the name and phone number(s) of at least one person to be notified in the event of an emergency (spouse, parent, friend).

C) **General Nature of Field Activity:** Identify the activities that will occur at each site (water sampling, fish collection, bugs collection, bacteria, other).

D) **Closest Hospital/Medical Facility:** Identify the closest hospital or medical center in the area of each run.

A sample safety plan is attached as Appendix A of this document.

Table 1: Physical & Environmental Hazards.

Hazard	Cause	Symptoms	Prevention	Treatment
Vehicle Accident	Fatigue Impaired driving Driver error Roadway factors Vehicle factors		Obey traffic laws Wear your seatbelt Don't drive impaired Don't speed or drive recklessly Properly maintain vehicles	Follow steps in Section C, page 9 of Safety Guidelines
Dehydration	Not enough water intake	Increased thirst Dry mouth Flushed face Dizziness Headache Weakness Muscle cramps Dark urine	Drink plenty of water: At least 2 quarts throughout the day, more if working strenuously or in a warm climate	Drink water or sports drink
Heat Exhaustion	Prolonged physical exertion in a hot environment	Fatigue Excessive thirst Heavy sweating Cool, clammy skin	Drink plenty of liquids Take frequent rest breaks	Move out of the sun Cool off with water and air movement Drink water or sports drink Lie down with feet elevated
Heat Stroke	Prolonged physical exertion in a hot environment	Exhaustion Light-headedness Bright red warm skin Discontinued sweating	Drink plenty of liquids Take frequent rest breaks	Move out of the sun Cool off with water and air movement Drink water or sports drink Lie down with feet elevated **Go to a medical facility ASAP**
Hypothermia	Prolonged exposure to cold temperatures	Shivering Numbness Slurred speech Excessive fatigue	Dress in layers Wear appropriate clothing Avoid getting damp	Seek shelter from the wind, wet, and cold Drink a warm drink and eat something Prevent further heat loss with blankets/clothing Stay awake
Extreme Weather	Heavy rains, lightning, tornadoes, flash floods	Extreme weather can result in physical injury and/or death	Bring appropriate equipment to deal with severe weather Be aware of special weather concerns Do not sample in extreme weather	Seek appropriate shelter
Poisonous Plants	Exposure to poison ivy, poison oak, or poison sumac plants	Itchy rash Red, swollen skin	Avoid contact with poisonous plants Use pre-exposure lotion Wash clothes and skin with soap and water after exposure	Apply appropriate lotion to irritated areas Seek medical treatment as necessary

Hazard	Cause	Symptoms	Prevention	Treatment
Snakes	Rattlesnakes, Cottonmouths, Coral Snakes, and Copperheads		Walk in open areas Wear heavy boots Use a stick to disturb the brush in front of you Do not pick up, disturb, or corner a snake Back away slowly from a snake	Back away slowly while watching the snake Do not make fast movements **If bitten, follow steps in Section C, page 15**
Insect Stings	Bees, wasps, hornets, and yellow jackets	Buzzing, stinging	Bring medication if you have an allergy (the sting may be fatal) Keep scented foods/drinks covered Avoid wearing bright colors, flower prints, and perfume Move slowly or stand still (don't swat at insects)	Do not swat or kill – this may elicit an attack response from other bees/wasps Leave the area immediately Cover face If being chased move into a closed area if possible (i.e., vehicle)
Fleas & Ticks		Itching	Wear insect repellent Tuck pants into boots Stay on widest part of path Wear clothing with tightly woven material	Brush away if not attached If attached, remove quickly
Lyme Disease	Infection through the bite of an infected tick	Spreading rash ("bulls eye") Early symptoms: flu-like	Wear long sleeves and pants Use insect repellent Check clothing and hair for ticks and remove any ticks	Seek medical treatment
Rocky Mountain Spotted Fever	Infection through the bite of an infected tick	Sudden onset of fever Headache Muscle pain Spotty rash	Use insect repellent Wear long pants, shirts Check clothing and hair for ticks and remove any ticks	Seek medical treatment

B. While You Are Working

Several general procedures should be followed to stay safe and be prepared in the event of an emergency while in the field:

1) **Schedule Changes**--Contact your supervisor or the QA Officer by email or phone if the information in the safety plan changes.
2) **Emergency Beacon**--Always carry the emergency locator beacon to the sampling site with you. **Do not leave the beacon in your vehicle.**
3) **Proper Equipment**--Proper personal protection equipment (i.e., waders/boots) should be worn at all times. Closed toe shoes are required for field work.
4) **Be Aware**--Watch for impending hazards such as severe weather events, fires, etc. Watch coworkers for signs of heat exhaustion, hypothermia, allergic reactions, etc. (see Table 1 for symptoms). Watch for snakes before placing your hands in areas where they may be present (wood piles, crevices).
5) **Pests**--Wear insect repellent. If you get a tick bite, be aware of the symptoms of tick-borne illnesses (Table 1).

The following guidelines are taken directly from the safety guidelines contained in the OCC's "Fish Collection" and "Vehicle Usage" chapters of the Standard Operating Procedures (SOP) document. Further information can be found in the SOP.

Electrofishing:

- While electrofishing, avoid contact with water unless sufficiently insulated against electric shock. Use chest waders with non-slip soles and water-tight rubber gloves that cover to the elbow. If they become wet inside, stop fishing until thoroughly dry.
- Avoid contact with anode at all times. <u>At no time while electrofishing should a crew member reach into the water for any reason.</u>
- General safety guidelines should be observed. If waders or gloves develop leaks, leave the water immediately. Avoid operating electrofishing equipment near people, pets, or livestock. Discontinue any activity in streams during thunderstorms or heavy rain. Rest if crew becomes fatigued.

Chemicals:

- Formalin, the chemical used to preserve fish, is a carcinogen and can also cause permanent damage to mucous membranes and eyes. Care must be taken when placing fish in formalin so that the fish does not flop around and splash formalin onto people near the jar. Proper precautions should be taken when handling formalin. Avoid inhalation of vapors.
- Several other chemicals are used when preserving and testing water samples. Proper eyewear and protective clothing should be worn to prevent injury. Specific information on chemicals used can be found in the following chapters of OCC's SOP: "Alkalinity Measurement," "Automated Sampler," "Fish Collection," "Hardness Measurement," "Inorganic and Bacteria Sample Collection," and "pH Measurement."

Vehicle Usage:

- OCC vehicles must be driven only by properly licensed and trained staff. The staff member in charge of the field activity must ensure that each driver is appropriately licensed and suitably trained for the driving required for the field activity. Only state employees are allowed to ride in vehicles.
- Every occupant of an OCC vehicle must wear a properly fastened seat belt while the vehicle is moving, whether the vehicle is on or off road.
- Smoking, the consumption of alcohol, and the misuse of drugs are not allowed in OCC vehicles. Never drive a vehicle if you have consumed alcohol beforehand or if you have taken medication or drugs that might affect you.
- The use of cell phones in any manner is only permitted while the vehicle is safely and legally parked on the side of the road.
- All vehicles are to be driven safely and in compliance with the requirements of state and federal laws. Respect and obey the legal speed limit at all times. Most accidents result from driving too fast for existing road conditions. You must reduce speed if road conditions are unknown, if they deteriorate, or if visibility is reduced, no matter what the legal speed limit.
- Do not transport passengers in the back of pick-up vehicles.
- Do not pick-up or give a lift to hitch hikers.
- Park your vehicle in a safe place when you stop by the side of the road. Park well off the road on a straight stretch away from curves, hills, and intersections.
- Cattle and deer are a particular hazard at dusk and may suddenly run into your path from the side of the road. Do not swerve to avoid any animal. You should brake in a straight line to avoid a roll over.
- To avoid the possibility of starting a grass fire from hot engine parts, avoid parking in tall dry grass.
- Employees will report all accidents and incidents, as well as near misses that may have resulted in personal injury or property loss.
- Be careful to observe and heed vehicle gauges and warning lights for potential vehicle problems.

C. In Case of an Emergency

An emergency is an unforeseen crisis that requires immediate action. An emergency may pose an immediate risk to health, life, property, or environment. Both medical emergencies and vehicular emergencies are discussed here, as well as procedures to follow for a missing person.

Medical Emergency:
Most medical emergencies require urgent intervention to prevent a worsening of the situation. **In the case of a medical emergency in a remote location, the following procedures are to be followed:**

1) Call 911 for assistance. If you cannot contact 911 (no phone signal), deploy the emergency locator beacon according to manufacturer instructions.
2) If the victim cannot be moved, and if you cannot contact 911, send someone for help. If no one is present to go for help, complete steps 3 and 4 below and then go for help.
3) Administer initial first aid.
4) Make the patient as comfortable as possible.

If an employee suffers a job-related injury or illness, he/she must notify his/her supervisor within **24 hours**. The employee's supervisor must complete the Preliminary Summary Report. If the injury is "serious" (amputation, permanent disfigurement, overnight hospital stay) notify your supervisor **immediately.**

Worker's Compensation:
In accordance with the OCC's Employee Handbook, an employee injured on the job is protected by Worker's Compensation Insurance**.** Any work related injury should be reported as soon as possible to your supervisor and Steve Coffman. **If it is an emergency,** the employee should immediately go to the nearest medical facility. **In case of non-emergency accident,** notify the supervisor as soon as possible and definitely within 24 hours. If necessary, the employee can make a doctor appointment, but **make sure that the doctor will treat worker's comp injuries (some doctors will not)**. There does not need to be a precertification to go to the doctor for the initial visit, but an "On-the-Job Accident Report" must be completed by the injured employee, and the Supervisor must complete an "On-the-Job Accident Investigation Report." The appropriate forms must be completed and faxed to Steve as soon as possible so that the injury can be filed at CompSource, and then medical treatment can be authorized. CompSource will then review the information and call the employee or doctor seen for more information if necessary.

Vehicular Emergency:
More fatalities, accidents, and serious injuries occur with motor vehicles than with any other equipment used in the field. Following the guidelines in Section B, above, will help to eliminate vehicle-related accidents. It is important that staff operate vehicles and equipment correctly and be familiar with the performance limits of vehicles and equipment. The guidelines presented here are also contained in the "Vehicle Usage" chapter of OCC's SOP document.

Accidents:
If you are involved in a road accident, record all the relevant facts on the spot. There should be a tri-fold "***Accident Information Form***" in the glove box of each vehicle which should be filled out. A copy of this pamphlet is included in this document as Appendix B. The following list summarizes the information contained on the official form. In case of an accident:

1) Aid the injured.
2) Do not make any statements concerning the assumption of liability or sign any statement.
3) Call the police. Write down the name and badge number of the officer(s) who assist you.
4) Record facts about your vehicle, including agency and division, driver's name, division phone number, make/year of vehicle, tag number, location and extent of the damage.
5) Record facts about other vehicles, including driver's name, phone number, address, make/year of vehicle, tag number, driver's license number, insurance company, location and extent of damage.
6) Record facts about any injured person(s), including name, age, address, and phone number.
7) Record facts about other property damage (non-vehicular), including owner's name, phone number, address, property damaged, and description of damage.
8) Get witness information, including name, phone number, and address.
9) Call Risk Management: 1-888-521-RISK. **Risk Management must be contacted within 24 hours**.
10) Record the date, time, and address of the incident.
11) Contact your supervisor immediately.

You must fill out the Risk Management Accident form even if no other vehicle is involved. The completed form must be turned in to the supervisor.

Breakdowns:
Every vehicle should have a "Network Car Roadside Assistance" card in the glove box. This card provides a phone number to call for various vehicle services, including towing, battery boost, locksmith, flats, fuel delivery, and winching. The number is 1-866-227-7323. OCC employees should ensure that the card remains in the glove box.

Repairing Damage:

1) **If your vehicle is leased from Fleet Management:**
   a. Emergency repairs must be reported to Fleet Management on the day the emergency occurs. Call Fleet Management (405-521-2206) and get prior authorization for any repair. If the emergency is after hours, it must be reported on the first working day following the emergency.
   b. If the vehicle is damaged and repair work is needed, repairs should be made promptly. If the vehicle is not drivable, call the Network Car Roadside Assistance service (information in above section) and have the vehicle towed in; the wrecker service will bill for this service. Have the garage evaluate the vehicle's condition and make a repair estimate. Call the Fleet Management at (405) 521-2206 with this estimate to obtain a purchase order for this repair. To obtain a purchase order you will need the following information:
      - Vendor's name, address, and telephone number
      - Vehicle number
      - Quantity and cost of each item used
      - Labor time and charge
      - **No state sales tax is to be charged**
   c. Direct all invoices and sales slips to State Fleet Management, 317 NE 31st Street, Suite A, Oklahoma City, Oklahoma, 73105.
2) **If your vehicle is owned by OCC:**
   a. Call your supervisor immediately.
   b. If the vehicle is damaged and repair work is needed, repairs should be made promptly. If the vehicle is not drivable, call the Network Car Roadside Assistance service (information in above section) and have the vehicle towed in; the wrecker service will bill for this service. Have the garage evaluate the vehicle's condition and make a repair estimate. Call your supervisor with the following information:
      - Vendor's name, address, and telephone number
      - Vehicle number
      - Quantity and cost of each item used
      - Labor time and charge
      - **No state sales tax is to be charged**
   c. Work with your supervisor or other assigned OCC employee to make payment arrangements.

Missing Person Emergency:
If a scheduled call is missed or a staff person does not appear at a scheduled meeting location on time, attempt to contact the missing person every hour on the hour until the missing person is contacted. Two hours after the missed call/meeting, the monitoring coordinator must be notified, and he will attempt to contact the listed emergency contact to inquire about the location and well-being of the staff person. If locating the staff person through their listed emergency contact(s) fails, the Water Quality Director or her designate will be contacted. If there has been no contact with the missing person eight hours after the scheduled call/meeting was missed, the following response MUST be implemented:

1) Inform the police.
2) Mobilize vehicles to search area.
3) Attempt to establish phone contact with missing person every half hour.
4) If missing person is found / contacted and a remote area emergency reported, report the following to the Water Quality Director:
   · Location and time of incident
   · Nature of the incident
   · Action undertaken by field crew
   · What future action response is required by field crew?
   · Any additional information

D. Medical Care and First Aid

These field safety guidelines do not attempt to cover the whole topic of first aid. Every field worker should have completed a basic level first aid and CPR (cardio-pulmonary resuscitation) course. The information below is designed to assist in the immediate response to medical emergencies most likely to be occur. This information has been summarized from Red Cross publications.

In all emergencies follow these initial steps:

- **Check:**
  1) **For Danger:** Only proceed if it is safe to do so. Ensure that no one else gets injured and if possible remove the victim to a safer position.
  2) **For Response:** Check the victim for consciousness. If conscious, manage any bleeding; if unconscious, go to next step.
- **Call:** Call 911, deploy emergency beacon, or send someone for help.
- **Care:** Look and listen for breathing. If the victim is not breathing, turn them on their back and commence CPR (Cardio-Pulmonary Resuscitation).

INITIAL RESUSCITATION / CPR (CARDIO PULMONARY RESUSCITATION)

If the patient is not breathing:

- Tilt the head back.
- Place the heel of one hand on lower half of sternum
- Grasp wrist area with other hand, keep fingers off chest
- Compress (push down) sternum vertically about half the thickness of the person's chest.
- Give 30 compressions, then 2 breaths. Repeat until help arrives.

NOTE: If you are unwilling or unable to give breaths, continue chest compressions until help arrives.

BLEEDING

All bleeding should be stopped by applying pressure (except for the ear — cover the ear loosely and let drain freely — seek medical aid). Always take necessary precautions to avoid the spread of disease to and from the victim. This may require the use of latex or nitrile gloves that should be located in your first aid kit.

HEAT STRESS

The combination of high temperature, high humidity, over-exertion, and lack of acclimatization all contribute to the development of heat-related illnesses. It need not be especially hot. Heat-related illnesses can develop if the air temperature exceeds 23°C. However, **the higher the temperature and humidity, the more likely the danger of heat-related illnesses.** Evaporation of sweat is the main mechanism for cooling the human body. The onset of heat-related illness usually occurs when the body core temperature begins to rise because there is not enough water available within the body to produce the necessary amount of sweat (dehydration). Your body must be able to produce sweat freely. Furthermore, this sweat must evaporate from your skin for maximum cooling effect. It is important to recognize the need for acclimatization and fluid replacement to prevent various heat-induced illnesses, especially when engaged in strenuous work.

Prevention of Heat-Related Illness

- Drink plenty of water. Avoid dehydration. Do not rely on thirst to indicate how much to drink. Drink large quantities before you begin work, and about 1 cup every 20 minutes while you work. Water is best; carbonated drinks are less effective. Do not drink milk, undiluted fruit juices, or any form of alcohol. When performing moderately strenuous work in a hot environment, you need to drink at least 5 liters of water a day.
- Wear a broad brimmed hat in the sun.
- Increase your salt intake slightly. The salt in most prepared foods should be sufficient. However, if you have been sweating heavily, an electrolyte-glucose drink such as Gatorade might be advisable.
- Wear light colored, loose fitting clothing that does not leave too much skin exposed.
- Listen to your body. Don't over-exert yourself in hot or humid weather, on or off the job.
- Become acclimatized, whether you are new to a hot climate or are returning from a break, sickness, or annual leave.

There are three main types of heat stress: heat cramps, heat exhaustion, and heat stroke.
A fourth type, prickly heat rash, is an annoying but less disabling form of heat stress. Heat cramps and heat exhaustion result from dehydration and salt depletion as the body sweats to lower its internal temperature. Heat stroke occurs when the body core temperature exceeds 41°C because its cooling mechanisms have broken down. This condition can cause death. **Heat stroke requires immediate medical attention. You can avoid almost all cases of heat stress by taking preventative measures.**

***Heat Cramps*--**These painful spasms usually occur in your arm and leg muscles. They can be disabling, but they are preventable if you pay attention to replacing the salt and water lost through sweating.

Treatment:

- Replace the water and salt lost by dehydration.
- Gently stretch the muscle and apply ice.

***Heat Exhaustion*--**If you do not replace the fluids lost through sweating, you may develop heat exhaustion. Although a person suffering from heat exhaustion can continue to produce sweat, the production is not great enough to cool the body satisfactorily. While there is no significant rise in the core body temperature of a victim of heat exhaustion, the condition can rapidly develop into heat stroke.

The symptoms for heat exhaustion are:

- Cool clammy skin.
- Weakness or fatigue.
- Headache nausea, vomiting muscle cramps.
- Dizziness.
- Confusion or incoherence.

Treatment:

- Move the victim to a cool area out of the sun. Cool the victim if necessary by dousing the victim with lukewarm water or covering with wet clothing / blankets. (Use water with a temperature that is warm to the touch but cooler than skin temperature. This temperature produces the best cooling effect by evaporation and conduction. Water that is too cold will effectively shut down the blood supply to the skin. It can also induce shivering as the body works to warm up that local area.)
- Fan the body, using electric or hand-held fans, or place the victim in a vehicle with the windows down so that he or she is exposed to the moving air.
- Replace the water and salt lost by dehydration.
- Have the victim lie down with feet elevated.
- Drive back to a medical treatment facility or rest area, as needed.

Although a victim of heat exhaustion may feel better almost immediately and wish to return to work, 24 hours of rest is needed for adequate rehydration to occur.

***Heat Stroke*--**Heat stroke is a **life-threatening condition** demanding immediate medical attention. As the body core temperature approaches 41°C, the skin usually becomes hot and dry, and the victim can no longer produce sweat. Once this happens, the victim will die if his or her body temperature continues to rise. Provide interim treatment and transport victims of heat stroke to a medical treatment facility as soon as possible, because complications frequently develop.

The symptoms for heat stroke are:

- Hot dry skin.
- Rapidly rising core temperature.
- Rapid pulse.
- Headache, nausea, and vomiting.
- Delirium.
- Convulsions.
- Collapse and coma.

Interim Treatment — Prior to Medical Evacuation:

- Get the victim out of the sun and into the coolest possible location.
- Loosen tight clothing and elevate the feet.
- Cool the victim as quickly as possible, paying particular attention to the head, armpits, and groin. Douse the victim with lukewarm water or cover with wet clothing / blankets. (Use water with a temperature that is warm to the touch but cooler than skin temperature. This temperature produces the best cooling effect by evaporation and conduction. Water that is too cold will effectively shut down the blood supply to the skin. It can also induce shivering as the body works to warm up that local area.)

- Fan the body, using electric or hand-held fans, or place the victim in a vehicle with the windows down so that he or she is exposed to the moving air. The aim is maximize evaporation from the body to cool the core body temperature, without chilling the victim.
- **Transport the victim to a medical facility as soon as possible.**

HYPOTHERMIA (EXPOSURE TO COLD)

Traveling or working in cold weather conditions can lead to hypothermia. Many variables contribute to the development of hypothermia. Age, health, nutrition, body size, exhaustion, exposure, duration of exposure, wind, temperature, wetness, medication, and intoxicants may decrease heat production, increase heat loss or interfere with thermostability. The healthy individual's compensatory responses to heat loss via conduction, convection, radiation, evaporation and respiration may be overwhelmed by exposure. Water conducts heat away from the body 25 times faster than air because it has a greater density (therefore a greater heat capacity). **Stay dry = stay alive!**

Conditions Leading to Hypothermia:

- Cold / cool temperatures.
- Improper clothing and equipment.
- Wetness.
- Fatigue, exhaustion.
- Dehydration.
- Poor food intake.
- No knowledge of hypothermia.

Signs and Symptoms of Impending Hypothermia (in order of progression):

- Normal shivering begins, pale skin, fatigue, & signs of weakness begin to show.
- Cold sensation, goose bumps, unable to perform complex tasks with hands, shiver can be mild to severe, hands numb.
- Intense shivering, lack of muscle coordination becomes apparent, movements slow and labored, stumbling pace, mild confusion, may appear alert. Use sobriety test, if unable to walk a 30 foot straight line, the person is hypothermic.
- Violent shivering persists, difficulty speaking, sluggish thinking, amnesia starts to appear, gross muscle movements sluggish, unable to use hands, stumbles frequently, difficulty speaking, signs of depression, withdrawn.
- Shivering stops, exposed skin blue or puffy, muscle coordination very poor, inability to walk, confusion, incoherent/irrational behavior, but may be able to maintain posture and appearance of awareness.
- Muscle rigidity, semiconscious, stupor, loss of awareness of others, pulse and respiration rate decrease, possible heart fibrillation.
- Unconscious, heart beat and respiration erratic, pulse may not be palpable.
- Pulmonary oedema, cardiac and respiratory failure, death. Death may occur before this stage is reached.

Treating Hypothermia:

- The basic principles of rewarming a hypothermic victim are to conserve the heat they have and replace the body fuel they are burning up to generate that heat. If a person is shivering, they have the ability to rewarm themselves at a rate of 2°C per hour.
- Seek shelter to get the person out of the cold, windy, wet environment.
- Provide warmth. Provide the person with a hot drink (no alcohol, coffee, or tea) and some high energy food.
- Halt further heat loss by insulating the person with extra clothes, etc. This person should recover from the present condition quite quickly.
- Try to keep the patient awake, ignore pleas of "leave me alone, I'm OK". The patient is in serious trouble, keep a close, continuous watch over the patient.

SNAKE BITE

If a person is bitten by a snake use the pressure bandage/immobilization method of treatment.

The venom is conveyed from the site of the bite and absorbed into the blood stream via the small superficial lymph vessels just beneath the skin. These can easily be compressed thus slowing the venom flow into the blood system. The cause of death by snakebite is respiratory arrest by the gradual paralysis of all muscles including the diaphragm.

- Using a pressure bandage, bandage straight over the snakebite and wind the bandage up the limb towards the body keeping a firm pressure.
- Apply the bandage tightly enough to compress the tissues, but not so tight as to restrict the flow of blood to the areas below the bandage.
- Avoid excessive activity on the part of the patient.
- Reassure the patient.
- Seek medical aid urgently

Procedure — First Aid for Snakebite

1) Don't panic! Keep the patient still and reassure them.
2) Avoid unnecessary movement. If you have been bitten by a dangerous snake, then immobilize the limb. Instruct the patient to cease all use of the limb and any general activity.
3) Apply pressure to the bite area at about the same pressure as for a sprained ankle. You should apply a broad bandage over the whole bitten limb, at that same pressure.
4) If there is significant bleeding from the wound, try to slow the flow by local compression.
5) Always seek medical help at the earliest opportunity.
6) If the snake has been killed, bring it with the patient, but do not waste time, risk further bites, and delay application of pressure bandage by trying to kill the snake.

Warnings—do NOT do these things:

- Never bleed the site of the snakebite. A cut will allow poison into the bloodstream.
- Never wash or wipe the bite site. Venom is harmless on the skin.
- Never try to suck out the poison.
- Never use a constrictive (tourniquet) bandage.
- Never try to catch the snake.
- Never elevate the bitten limb.

Appendix A: Safety Plan

A copy of your safety plan must be submitted to both your supervisor and the QA Officer annually (every May). A completed safety plan must remain in your vehicle at all times as well. Changes should be reported to both the supervisor and QA Officer when possible.

Oklahoma Conservation Commission Field Research Safety Plan, Section A
Investigator Name:
Emergency Contact Name and Phone #:

Site Information			
Site Name:	**Latitude:**	**Longitude:**	**Legal:**
Driving Instructions:	**Nearest City:**		
	Nearest Hospital/Medical Clinic:		

Site Information			
Site Name:	**Latitude:**	**Longitude:**	**Legal:**
Driving Instructions:	**Nearest City:**		
	Nearest Hospital/Medical Clinic:		

Site Information			
Site Name:	**Latitude:**	**Longitude:**	**Legal:**
Driving Instructions:	**Nearest City:**		
	Nearest Hospital/Medical Clinic:		

Site Information			
Site Name:	**Latitude:**	**Longitude:**	**Legal:**
Driving Instructions:	**Nearest City:**		
	Nearest Hospital/Medical Clinic:		

Oklahoma Conservation Commission Field Research Safety Plan, Section A
Investigator Name:
Emergency Contact Name and Phone #:

Site Information			
Site Name:	**Latitude:**	**Longitude:**	**Legal:**
Driving Instructions:	**Nearest City:**		
	Nearest Hospital/Medical Clinic:		

Site Information			
Site Name:	**Latitude:**	**Longitude:**	**Legal:**
Driving Instructions:	**Nearest City:**		
	Nearest Hospital/Medical Clinic:		

Site Information			
Site Name:	**Latitude:**	**Longitude:**	**Legal:**
Driving Instructions:	**Nearest City:**		
	Nearest Hospital/Medical Clinic:		

Site Information			
Site Name:	**Latitude:**	**Longitude:**	**Legal:**
Driving Instructions:	**Nearest City:**		
	Nearest Hospital/Medical Clinic:		

Oklahoma Conservation Commission Field Research Safety Plan, Section B			
Investigator Name:			
Emergency Contact Name and Phone #:			
Run	**Site Name, In Order of Visit**	**Projected Dates for Runs**	**Activity Planned at Site (fish, bugs, water, bacteria, other)**

Oklahoma Conservation Commission Field Research Safety Plan, Section B			
Investigator Name:			
Emergency Contact Name and Phone #:			
Run	**Site Name, In Order of Visit**	**Projected Dates for Runs**	**Activity Planned at Site (fish, bugs, water, bacteria, other)**

Example of Completed Section B of Safety Plan:

Oklahoma Conservation Commission Field Research Safety Plan, Section B			
Investigator Name: Wes Shockley			
Emergency Contact Name and Phone #: Mrs. Shockley 405-555-5555 or 555-4444			
Run	**Site Name, In Order of Visit**	**Projected Dates for Runs**	**Activity Planned at Site**
Pauls Valley	Peaceable Cr.	6/2/2008	water, bacteria
	Brushy Cr.	7/7/2008	water, bacteria
	Fourche Maline	8/11/2008	water, bacteria
	Brazil Cr.	9/15/2008	water, bacteria
	San Bois Cr.	10/20/2008	water
		12/1/2008	water
		1/5/2009	water
		2/17/2009	water
		3/23/2009	water
		4/27/2009	water
		6/1/2009	water, bacteria
B	Cloud Cr.	6/3/2008	water, bacteria
	Shady Grove	7/8/2008	water, bacteria
	Elk Cr.	8/12/2008	water, bacteria
	Butler Cr.	9/16/2008	water, bacteria
	Snake Cr.	10/21/2008	water
	Polecat Cr.	12/2/2008	water
		1/6/2009	water
		2/18/2009	water
		3/24/2009	water
		4/28/2009	water
		6/2/2009	water, bacteria

Appendix B: Risk Management Contact Card and Accident Information Form

A copy of the Risk Management Contact Card and Accident Information Form should be kept in the glove box of every vehicle. Additional copies may be obtained from Fleet Management.

Risk Management Contact Card

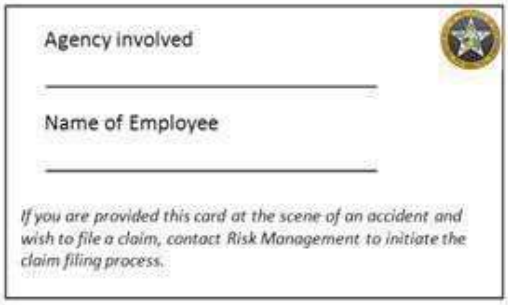

STEP #8

Get witnesses (if available).

Attach additional page, if necessary

Name Phone no.

Address

STEP #9

Record facts about other property damage.
(Non-vehicular)

Owner's Name Phone No.

Address

Property Damaged

Nature of Damage (be brief)

Signature of Employee Date

DCAM/RISK MGMT - FORM 009 (04/2017)

STATE OF OKLAHOMA

Risk Management Department
P.O. Box 53364
Oklahoma City, OK 73152-3364
405-521-4999

STATE WIDE TOLL-FREE
(agency use only)

1-888-521-RISK (7475)

FORMS CAN BE FOUND ON THE RISK MANAGEMENT WEBSITE

www.ok.gov/DCS/Risk_Management/index.html

OMES
OFFICE OF MANAGEMENT & ENTERPRISE SERVICES

ACCIDENT INFORMATION FORM

THIS FORM IS NOT TO BE GIVEN TO THE OTHER DRIVER

RM CARD IS TO BE GIVEN TO THE OTHER DRIVER

Keep accident information form and RM card in the glove compartment of all state and personal vehicles.

STEP #1

Assist the injured.

- Do not move injured individuals unless absolutely necessary.
- Do not tell the injured party the state will accept responsibility for medical expenses.
- Take photographs of the scene including, but not limited to, area surrounding the accident and damage to vehicles involved.

Do not comment.

- Do not admit any fault.
- Only give information required by authorities.
- Do not sign any statement except from an authorized representative of the Risk Management department or your agency's authorized legal counsel.

STEP #2

Call the police or 911.

Give exact location and advise if medical help is needed. Write down the name(s) and badge number(s) of police officer(s) who assist you.

Name: _____

Badge #: _____

Traffic Citation issued to:

☐ State Employee ☐ Other Driver

STEP #3

Call your supervisor and/or risk coordinator.

Contact your supervisor immediately. Complete a Standard Liability Incident report and a Scope of Employment form and send to your agency risk coordinator upon return your office.
Risk coordinators will contact state Risk Management immediately.

STEP #4

Record the facts of the incident.

DATE OF INCIDENT: _____

TIME: _____ A.M. or P.M.

LOCATION OF INCIDENT:

_____

Describe the incident:

_____

_____

_____

STEP #5

Facts about your vehicle.

Agency _____ Department _____

Driver's Name _____

Department Phone # _____

Make/Year _____ Tag No. _____

What part of vehicle is damaged? _____

STEP #6

Obtain facts about other vehicle.

Name _____ Phone No. _____

Address _____

Make/Year _____ Tag No. _____

Driver's License No. _____

Insurance Co. _____

Policy Number _____

What part of vehicle is damaged? _____

STEP #7

Obtain facts about injured person(s).

Attach additional page if necessary

Name _____ Age _____

Address _____ Phone No. _____

Injured Party:

☐ In State Vehicle ☐ Pedestrian
☐ In Other Vehicle

(CONTINUE TO STEP #8)

OKLAHOMA CONSERVATION COMMISSION
WATER QUALITY DIVISION

STANDARD OPERATING PROCEDURE

SPIKE, DUPLICATE, REPLICATE, AND BLANK SAMPLES/ MEASUREMENTS FOR ROUTINE QA

1.0 PROCEDURAL SECTION

1.1 Scope and Application

To implement QA/QC procedures, specific samples/measurements must be obtained that provide for direct measurement of investigator/method precision, accuracy, and bias. To this end, spikes, duplicates, replicates, and blanks are collected/produced as a percentage of sampling effort in accordance with data quality objectives as outlined in specific project QAPPs. Generally, OCC collects blank, duplicate, and replicate samples/measurements at a rate of 10 percent of sampling effort or for each separate sampling episode, whichever effort is greatest.

1.2 Summary of Method

1.2.1 Definitions and Synopsis

QA/QC SAMPLES COLLECTED

- BLANK: Refers to a sample of de-ionized water (analyte-free). The blank is collected in the field by first rinsing a sample bottle 3X with blank water and then filling. The blank is then preserved, documented, and transported under the same conditions as the samples. Assuming the purity of the blank water from the lab, the field blank allows assessment of contamination during sampling, preservation, and transportation that will be assumed for all samples during the sampling episode.
- SPLIT/DUP: A split or duplicate sample refers to a grab sample that is homogenized in a splitter-churn (split) and the sample and duplicate samples (splits) subsequently obtained. The two samples, although obtained separately, should theoretically be equivalent in analytical results. Refer to section 1.10.2, *Inorganic Composite Sample* in the Inorganic Sampling SOP for specific details. The split or duplicate allows determination of precision in sampling procedure (i.e., field technician error).
- REPLICATE: A replicate is one or more grab samples taken in different locations (width or length) or at different times. Spatial replicates are preferred. Procure replicate measurements/samples at least 50 m from the original sampling site in an area of similar habitat. If within reasonable walking distance an area of similar habitat is unavailable, move upstream or laterally within the same habitat and obtain replicates from an undisturbed area. *In all cases, care must be taken to ensure replicates are taken from areas of similar habitat.* Indicate whether the replicate is spatial or temporal in the comments section of the **Sampling Episode Sheet**. Replicate samples are designed to estimate the spatial and/or temporal in-stream variation affording assessment of the representativeness of a single grab sample or measurement.
- SPIKE: A spike refers to the addition of a known amount and concentration of analyte to a sample. The purpose of a spike is to measure the performance of the complete analytical system. Spikes are only performed as directed by individual project QAPPs.

FIELD QA/QC READINGS

- COND, pH, DO: Obtain replicate readings for these parameters in-situ in an undisturbed and most applicable portion of the area chosen for replicate samples (outlined above).
- FLOW A spatial replicate should be collected following the methods outlined in the Flow Meter SOP
- TURB, ALK, HARDNESS: Duplicate and replicate readings for these parameters must be obtained and recorded appropriately. Replicate readings will be obtained from a sample taken at the replicate site in the stream. Duplicate readings will be obtained from aliquots from the splitter churn post-homogenization, analyzing once for the parameter value to be recorded on the **Site Collection Sheet** and the second time for the "SPLIT/DUP" recorded on the **Sampling Episode Sheet**. Care should be taken to rinse glassware thoroughly between duplicate and sample analyses. A procedural blank using de-ionized water should also be performed and results recorded accordingly.

1.3 Health and Safety Warnings

Not applicable

1.4 Cautions

Not applicable

1.5 Interferences

Not applicable

1.6 Personnel Qualification

Field personnel must be trained and evaluated by the Quality Assurance Officer and/or the Monitoring Coordinator on the proper procedure. Training will be done through dry run exercises in the laboratory and field to familiarize field personnel with operation/collection, calibration, and maintenance. Investigators must be familiar with the appropriate SOP documents, when applicable.

1.7 Apparatus & Materials

1.8 Procedure

For each sampling episode or at a cumulative frequency of 10% for sites sampled, field personnel should select a site to perform the QA activities outlined below. Sites should be selected for QA that will limit error or measurement variability to procedural/analytical phenomenon and not biases due to highly variable or exceptionally extreme physical conditions present at the site. If the site selected is the last site visited and it is not suitable, field personnel should return to a previous site for these samples.

1.8.1 Preparation or Measurement of Blank Samples

Shortly before leaving for the field, obtain high quality, deionized reagent water from the lab or equivalent and pertinent source. This water should be kept in a polyethylene bottle which has been rinsed 3 times in deionized water.

In the field at the site chosen for QA activities, label sample bottles in the same manner as you would for a sample (i.e. date, Acidified or not), but write "field blank" where you would normally write the name of the stream; rinse the bottles 3X with a volume of deionized water equivalent to that with which you would rinse stream bottles; fill the sample bottles with deionized water. Add the correct amount and type of acid to the “acidified” sample, and cap both the bottles tightly and place in the ice chest with the other sample bottles. The blanks should experience the same treatment as all the other samples in terms of storage and transport.

For field blank measurements, conduct the turbidity, alkalinity, and hardness procedures using reagent grade water.

1.8.2 Preparation or Measurement of Split/Duplicate Samples

Prepare the sample bottles, labeling one for preservation on ice and once for preservation with acid. Procure grab samples with the jugs according to procedures outlined for “inorganic grab samples” in the “Inorganic and Bacteria Sample Collection” SOP earlier in this document. Fill additional jugs with water to add to splitter churn for obtaining turbidity, alkalinity, and hardness values. Return to the vehicle and proceed with procedures outlined for “inorganic composite sample” in the “Inorganic and Bacteria Sample Collection” SOP.

To obtain relevant duplicate field measurements for turbidity, alkalinity, and hardness, obtain aliquots from the splitter churn post-homogenization, analyzing once for the parameter value to be recorded on the **Site Collection Sheet** and the second time for the “SPLIT/DUP” value recorded on the **Sampling Episode Sheet**. Care should be taken to rinse glassware thoroughly between duplicate and sample analyses.

1.8.3 Preparation or Measurement of Replicate Samples

Spatial replicates are preferred. To accomplish this, procure replicate measurements/samples at least 50 m from the original sampling site in an area of similar habitat. If within reasonable walking distance an area of similar habitat is unavailable, move upstream or laterally within the same habitat from which the original samples were procured and obtain replicates (in this case “temporal”) from an undisturbed area. *In all cases, care must be taken to ensure replicates are taken from areas of similar habitat.* Indicate whether the replicate is “spatial” or “temporal” in the comments section of the **Sampling Episode Sheet**.

Prepare the sample bottles, labeling one for preservation on ice and one for preservation with acid in the same manner as the original sample jugs, but add “replicate” to the label. Procure grab samples with the prepared jugs according to procedures outlined for “inorganic grab samples” in the “Inorganic and Bacteria Sample Collection” SOP earlier in this document. Then, procure an additional grab sample to be used for turbidity, alkalinity, and hardness measurement back at the vehicle. Replicate field measurements for DO, temperature, conductivity, and pH will be taken *in-situ* in accordance with procedures outlined in the respective SOPs. Record values in the appropriate space provided on the **Sampling Episode Sheet**.

1.8.4 Preparation of Spiked Samples

A spiked sample is one to which a known amount of analyte will be added or "spiked". Generally, spikes of several analytes are added to a single sample of stream water to allow for determination of recovery efficiency and matrix interference. When planning, be sure the different nutrient solutions do not interfere with each other. In order to calculate the recovery efficiency the following information must be recorded and sent to the Data Manager along with the field data: a) volume of stream or lake water in sample, b) volume of each spike solution added to sample, c) concentration of each spike solution and the units thereof, d) date, waterbody name, waterbody number of stream spiked.

1.8.4a Procedure for Spiking a Nutrient Sample

1. Put approximately 600 ml of sample water into a 1000 ml Class A graduated cylinder.
2. Add 10 ml of a 500 mg/liter NO_3-N to cylinder. Add 10 ml of a 150 mg/liter NH^{4+}-N to cylinder. Add 10 ml of a 25 mg/liter PO_4^{3+}-P to cylinder.
3. Bring cylinder up to the 1000 ml line with sample water.
4. Gently swirl cylinder so that no spike solution remains on the upper part of the cylinder, pour the solution back and forth from the cylinder to the bottle two times.
5. Add the correct amount and type of acid to the bottle.
6. Cap the bottle tightly.
7. Write "spike" under the waterbody name on the bottle.
8. Record the volume of sample water and volume and concentration of each spike solution in the comments section of the **Site Collection Sheet** for the particular site.

1.8.4b Procedure for Spiking the Non-acidified Sample

1. Use the same procedure as for spiking the nutrient sample except add: 10 ml 12,500 mg/liter Chloride, 10 ml 2,500 mg/liter Sulfate as SO_4, 10 ml 10,000 mg/liter Calcium as $CaCO_3$
2. Do not acidify this sample.

1.8.5 Wrap up

A complete QA site activity should result in 8 sample jugs: one "acid" and one "ice" sample; one "acid" and one "ice" duplicate; one "acid" and one "ice" replicate; and one "acid" and one "ice" blank. These samples should be listed separately on the Chain of Custody form so that four lines on the form will be used. Each line will list 2 containers and have the same waterbody number but should state whether the sample is regular (no additional notation), duplicate, or replicate. The blank sample is the same but will not have a waterbody number. A complete set of QA field measurements includes the following parameters: sample DO and replicate DO; sample turbidity, duplicate turbidity, replicate turbidity, and blank turbidity; sample alkalinity, duplicate alkalinity, replicate alkalinity, and blank alkalinity; sample hardness, duplicate hardness, replicate hardness, and blank hardness; sample conductivity and replicate conductivity; sample pH and replicate pH. Quasi duplicate temperature readings are obtained at the initiation and closing of sampling activities and at the requisite four hour calibration checks. These reading should be recorded on the **Sampling Episode Sheet**.

1.9 Data Management and Records Management

Record all data on the **Sampling Episode Sheet** (see **SOP Appendix: Data Sheets**). Refer to the **Procedures for Completing Field Data Sheets SOP**.

2.0 QA/QC SECTION

2.1 Training

Field personal must be trained and evaluated by the Quality Assurance Officer and/or the Environmental Monitoring Coordinator on the proper procedure. Training will be done through dry run exercises in the laboratory and field to familiarize field personnel with operation/collection, calibration, and maintenance. Investigators must be familiar with the appropriate SOP documents, when applicable.

2.2 Maintenance

Not applicable

2.3 QC Procedures

All equipment should be calibrated as described in the appropriate SOP.

OKLAHOMA CONSERVATION COMMISSION
WATER QUALITY DIVISION

STANDARD OPERATING PROCEDURE

TEMPERATURE MEASUREMENT

(ELECTRONIC TEMPERATURE SENSOR & THERMOMETER)

1.0 PROCEDURAL SECTION

1.1 Scope and Application[24]

Temperature readings are used in the study of saturation and stability with respect to calcium carbonate, in the calculation of salinity, and determination of theoretical oxygen solubility and several other calculations. In limnological studies, water temperature as a function of depth is often required. Elevated temperatures resulting from discharges of heated water may have significant ecological effects as related to state standards.

1.2 Summary of Method

Temperature measurements should be made with any electronic temperature sensor or hand held Celsius thermometer.

1.2.1 Definitions

Conversion of Fahrenheit to Celsius

$$^{o}C = 5/9(^{o}F - 32)$$

1.3 Health and Safety Warnings

Avoid contact with glass if thermometer is broken. Follow the appropriate procedures to clean-up the spill.

1.4 Cautions

None

1.5 Interferences

None

1.6 Personnel Qualification

Field personal must be trained and evaluated on the use of equipment prior to collecting samples or data. Use of equipment is subject to the approval by the QA Officer and/or Monitoring Coordinator. Training will be done through dry run exercises in the laboratory and field to familiarize field personnel with operation/collection, calibration, and maintenance. Investigators must be familiar with the SOP documents and manuals, when applicable.

1.7 Apparatus & Materials

- Electronic measurement using YSI Professional Series meter
- Hand held thermometer

1.8 Instrument/Method Calibration

The field collector should use the YSI ProPlus meter to make electronic measurements and use that meter to make all temperature readings. The accuracy of the temperature sensor should be assessed prior to daily sampling efforts. Since the accuracy of all sensor measurements depends on temperature, the temperature sensor must be checked for accuracy prior to any other sensor calibration checks. The temperature sensor and an NIST thermometers should be reading within 0.5 °C, the combined accuracy of the YSI sensor (+/- 0.2 °C) and the NIST thermometer (+/- 0.3 °C). If temperature calibration check fails, sensor reconditioning may be necessary. This meter should be calibrated against a National Institute of Standards and Technology (NIST) certified thermometer (or to one that is traceable to a NIST thermometer) each quarter following procedures as directed by the QA officer at a QA and meter calibration session. Consult the QA Officer for instructions on solving problems identified during QA/QC.

1.9 Equipment Operation & Preparation

Follow the instructions for the particular meter used for temperature measurement.

1.10 Sample Collection

<u>Electronic Temperature Sensor</u>:

Temperature is measured in stream at a depth of one foot in mid-channel or, if the stream is less than one foot deep, at a depth midway between surface and bottom.

After placing the probe in water, allow at least one minute for equilibrium to occur; switch meter to temperature mark. Read temperature in ^{o}C to the nearest 0.01.

---

[24] Text was taken directly or in part from Standard Methods (APHA, AWWA, WPCF, 1992).

Hand Held Thermometer:

If stream is wadeable, hold thermometer by its top under water in mid-channel for at least one minute to allow it to equilibrate with the water. Position the thermometer so the scale can be read and without removing it from the water. Read the temperature in °C to the nearest 0.5

1.11 Sample Handling & Preservation

Sample must be measured *in situ*.

1.12 Sample Preparation and Analysis

None

1.13 Troubleshooting

Refer to the owner's manual for the appropriate meter.

1.14 Data Acquisition, Calculation & Data Reduction

None

1.15 Computer Hardware & Software

None

1.16 Data Management & Records Management

1.16.1 Field Notation of Data

All field calibration and calibration checks should be recorded on the **Sampling Episode Sheet** (see SOP Appendix: Data Sheets). All measurements made at each site should be recorded on the **Site Collection Sheet** (see SOP Appendix: Data Sheets). Data should be recorded following procedures outlined in the Instructions for Recording Field Information SOP.

1.16.2 Chain of Custody Procedure

Temperature must be read in the field; therefore no Chain of Custody form is required.

2.0 QA/QC SECTION

2.1 Training

Training of field personnel will be done through dry run exercises in the laboratory and/or field to familiarize them with instrument operation, calibration and maintenance. Investigators must be familiar with the SOP document and owner's manual for the meter used.

2.2 Maintenance

- Maintenance of the electronic temperature sensor should follow procedures outlined for the individual meter.
- Handheld thermometers should be kept clean and in a protective case.

2.3 QC Procedures

These meters should be calibrated against NIST certified thermometers each quarter following procedures as directed by the QA officer at a QA and meter calibration session. Values will be recorded in the equipment logbook.

3.0 REFERENCES

APHA, AWWA, and WPCF (1992) Standard Methods for the Examination of Water and Wastewater, 17th edition, eds. L.S. Clesceri, A.E. Greenberg, and R.R. Trussell, American Public Health Association, Washington, D.C.

4.0 APPENDIX A

STANDARD OPERATING PROCEDURE
Field Summary

Temperature

Instrument/Method Calibration
The field collector should use the YSI ProPlus meter to make electronic measurements and use that meter to make all temperature readings. The accuracy of the temperature sensor should be assessed prior to daily sampling efforts. Since the accuracy of all sensor measurements depends on temperature, the temperature sensor must be checked for accuracy prior to any other sensor calibration checks. The temperature sensor and an NIST thermometers should be reading within 0.5 °C, the combined accuracy of the YSI sensor (+/- 0.2 °C) and the NIST thermometer (+/- 0.3 °C). If temperature calibration check fails, sensor reconditioning may be necessary. This meter should be calibrated against a National Institute of Standards and Technology (NIST) certified thermometer (or to one that is traceable to a NIST thermometer) each quarter following procedures as directed by the QA officer at a QA and meter calibration session. Consult the QA Officer for instructions on solving problems identified during QA/QC.

Sample Collection--In Stream

Electronic Temperature Sensor:

Temperature is measured in stream at a depth of one foot in mid-channel or, if stream is less than one foot deep, at a depth midway between surface and bottom.
After placing probe in water, allow at least one minute for probe to equilibrate with water temperature. Read temperature in °C to the nearest 0.01°.

Hand Held Thermometer:

If stream is wadeable, hold thermometer by its top under water in mid channel for at least one minute to allow it to equilibrate with the water. Position the thermometer so the scale can be read and without removing it from the water read the temperature in °C to the nearest 0.5°.

OKLAHOMA CONSERVATION COMMISSION
WATER QUALITY DIVISION

STANDARD OPERATING PROCEDURE

TURBIDITY MEASUREMENT

(HACH MODEL 2100Q)

1.0 PROCEDURAL SECTION

1.1 Scope and Application[25]

Turbidity is a measurement of the clarity of water, which is an optical property that interferes with the straight transmission of a light beam through a water sample. Turbidity is caused by suspended matter (clay, silt, organic particles, and inorganic matter) as well as soluble colored organic compounds, like plankton and microorganisms (APHA *et al*., 1995). The Hach model 2100Q measures turbidity from 0.01 to 1000 Nephelometric turbidity units (NTU) and operates under the nephelometric principle of turbidity measurement.

1.2 Summary of Method

The principle of this method is based on a comparison of the intensity of light scattered by the sample under defined conditions with the intensity of the light scattered by a reference (APHA *et al.*, 1995). The greater the scattering or absorption of light, the more turbidity. Turbidity is determined by measuring the intensity of light scattered at 90° of the light path (APHA *et al*., 1992). The intensity of light scattered is reported in NTU.

1.2.1 Definitions

NTU	Nephelometric turbidity units
StablCal standards	gel standards used for checking the overall accuracy of the meter

1.3 Health and Safety Warnings

None

1.4 Cautions

- Always cap cell to prevent spillage of sample in unit.
- When measuring, place the unit on a level stationary surface—do not hold in hand.
- Use only clean sample cells free from scratches.
- Avoid measurement in direct sun light.
- Make sure cold samples do not “fog” the cell.
- Avoid settling of sample prior to measurement.
- Keep sample compartment lid closed to prevent dust and dirt from entering.

1.5 Interference

Dirty sample cells, scratches, air bubbles, and vibrations will bias the sample. Rapidly settling coarse sediment will also influence the reading. Water color due to dissolved substances or “true color” will bias the reading by absorbing light, resulting in a lower turbidity reading (APHA *et al*., 1995). Further, zooplankton in cells can cause unstable readings.

1.6 Personnel Qualification

Field personal must be trained and evaluated on use of equipment prior to collecting samples or data. Use of the equipment is subject to approval by the QA Officer and/or Monitoring Coordinator. Training will be done through dry run exercises in the laboratory and field to familiarize field personnel with operation/collection, calibration and maintenance. Investigators must be familiar with the SOP documents and owner’s manual, when applicable.

1.7 Apparatus & Materials

- Hach Portable Turbidimeter Model 2100Q
- 3 StablCal standards
- calibrated and/or optically marked sample cells

1.8 Instrument/Method Calibration[26]

Read the StablCal calibration standards before initial sample collection. If the calibration check is deviates by more than the greater of 5% or 1 ntu from the StablCal standard, the meter probably needs to be recalibrated. Clean the outside of the standards and inspect for scratches or other factors that may influence the reading. DO NOT use the StablCal standards to recalibrate the unit. If no reason for the erroneous values can be determined, consult the QA Officer. Samples can be collected and preserved in the dark at 4° C for laboratory analysis (48 hour holding period). The meter should be calibrated at the quarterly QA session or sooner if drift from StablCal standards is identified during daily calibration checks..

---

[25] Text taken directly or in part from Standard Methods (APHA, AWWA, WPCF, 1995).
[26] Text taken directly or in part from Cole-Parmer Operating Instructions (1996).

Meter Calibration:
Use for the quarterly calibration day.

1. Obtain standard grade Formazin series (<0.1, 20, 100, 800) from Hach Company and implement as outlined in the instructions provided.
2. Using four matched sample cells, fill each with the appropriate stock standard (0, 20, 100, 800 NTU).
1. Insert the blank or 0 NTU standard into the cell compartment. Align the orientation mark on cell with the mark on the front of the cell compartment. Close the lid.
2. Press the power button **I/O**.
3. Press the **CAL** button. The **CAL** and **S0** icons will be displayed and "**0**" will flash.
4. Press the **READ** button.
5. The display screen will show **S1** and **20 NTU** with the **1** flashing.
6. Agitate and insert the **20 NTU** standard into the cell compartment. Align the orientation mark on cell with the mark on the front of the cell compartment. Close the lid.
7. Press the **READ** button.
8. The display screen will show **S2** and **100 NTU** with the **2** flashing.
9. Agitate and insert the **100 NTU** standard into the cell compartment. Align the orientation mark on cell with the mark on the front of the cell compartment. Close the lid.
10. Press the **READ** button.
11. The display screen will show **S3** and **800 NTU** with the **3** flashing.
12. Agitate and insert the **800 NTU** standard into the cell compartment. Align the orientation mark on cell with the mark on the front of the cell compartment. Close the lid.
13. Press the **READ** button.
14. Press the **CAL** button to accept the calibration. The instrument will return to the measurement mode automatically.

1.9 Equipment Operation & Preparation [2]

1. The Model 2100Q operates on 4 AA-cell batteries. Before going to the field, switch the meter on using **I/O** power key and check for battery strength. If no reading occurs or if there is a battery symbol flashing in the lower left-hand side of the screen, change all 4 batteries.
2. Clean the sample collection cell; look for scratches or any other factors that may influence light scattering or absorption.

1.10 Sample Collection[2]

1. Perform a calibration check on StablCal standards daily prior to collection of water samples. Record the values on the **Sampling Episode Sheet**. Values should not deviate by more than the greater of 5% or 1 ntu.
2. Water samples should be collected from mid channel, from an area of flowing water. Care should be taken to avoid collection of any surface scum.
3. Fill the sample cell to the line with approximately 15-mL of sample.
4. Cap the sample cell. Clean the outside of the cell with a soft, lint-free cloth to remove fingerprints and water spots.
5. Apply a thin film of silicone oil. Wipe with a soft, lint-free cloth to obtain an even film over the entire surface.
6. Press **I/O** button. Place on flat, steady surface.
7. Put the sample cell in the instrument cell compartment so the white diamond or assigned orientation mark aligns with the raised mark in front of the cell compartment. Close the cover.
8. Press **READ**. The display will show "**- - - - NTU**" then the turbidity value in NTU. Record the turbidity after the lamp symbol in the lower left corner of the screen turns off. Record value on the **Site Collection Sheet**.

1.10.1 Operational Notes

1. Air bubbles in the sample will cause false high readings. Before covering the cell with the light shield, observe the sample in its cell. If finely divided air bubbles are present, refer to the owner's manual. The Hach owner's manual provides 4 methods for removing air bubbles. The vacuum method is the preferred option. Letting the sample stand for a period time is <u>not</u> recommended because particles may settle, resulting in a biased reading.
2. When measuring high amounts of turbidity, it may be necessary to dilute the sample in order to bring it within the range of the instrument. If the sample is extremely turbid or highly colored, the meter may read less than the actual amount of turbidity present. When a sample appears to contain more turbidity than the meter reads, <u>the sample should be diluted with another portion of sample</u>. <u>Diluting with distilled or deionized water may dissolve some of the turbidity</u>. The re-measured turbidity of the diluted sample should then be multiplied by the dilution factor to obtain the turbidity of the original sample. If the accuracy of the reading is still questionable, further dilutions should be conducted.

3. Condensation on the outside of the sample cell may occur under certain humidity and temperature conditions. Condensation will interfere with the sample reading. Let the sample equilibrate to the ambient air temperature for a short period. Use a dry, lint free cloth to wipe the moisture from the outside of the cell. Avoid settling and significant temperature changes; read the sample as soon as possible. Mix the sample thoroughly before measurement.

1.11 Sample Handling & Preservation

Measurement should be performed *in situ*. However, if measurement is performed in the laboratory, collect samples in clean glass or HDPE plastic container with zero headspace. Place samples on ice and keep in the dark.

1.12 Sample Preparation and Analysis

There is a 48 hour holding time for turbidity; it should be measured as soon as possible.

1.13 Troubleshooting

If the initial reading of the StablCal deviates by more than the greater of 5% or 1 ntu of the calibrated value, then the unit and gel standards may need to be recalibrated. Clean the outside of the gel standards and inspect for scratches or other factors that may influence the reading. Consult the QA officer if the problem cannot be resolved. Do not recalibrate the unit using the StablCal standards. Record the reading of the standards again after all the samples have been read.

For other error messages or problems, refer to the owner's manual

1.14 Data Acquisition, Calculation & Data Reduction

Not applicable

1.15 Computer Hardware & Software

Not applicable

1.16 Data Management & Records Management

1.16.1 Field Notation

All field calibration and calibration checks should be recorded on the **Sampling Episode Sheet** (see SOP Appendix: Data Sheets). All turbidity measurements made at each site should be recorded on the **Site Collection Sheet** (see SOP Appendix: Data Sheets). Data should be recorded following procedures outlined in the Procedures for Completing Field Information SOP. It is particularly important to note whether or not rainfall likely influenced the observed turbidity value; state standards for assessing turbidity impairments require using seasonal base flow values only.

1.16.2 Chain of Custody Procedure

Turbidity should be measured in the field; therefore, no Chain of Custody form is required. However, if the laboratory is going to measure turbidity, then follow the procedures described in the **Chain of Custody and Sample Labeling SOP**.

2.0 QA/QC SECTION

2.1 Training

Training of field personnel will be done through dry run exercises in the laboratory to familiarize them with instrument operation, calibration and maintenance. All operators are required to become familiar with the SOP documents and owner's manual. Prior to solo sample collection, field personnel are evaluated in a field setting for proper use of equipment and sample collection protocol. Annual field audits are performed on sample collectors following procedures outlined in the **Quality Management Plan.**

2.2 Maintenance

- The unit is not waterproof, avoid getting it wet--do not submerge unit
- Keep the unit as clean as possible. Clean outside of unit with a moist cloth.
- Avoid prolonged exposure to direct sunlight and ultraviolet light.
- Wash sample cells with non-abrasive laboratory detergent and rinse with DI water.
- Replace sample cells as needed when they become scratched or stained.
- Batteries will last for approximately 180 to 300 tests depending on the measurement mode selected. Do not leave batteries stored in the unit for prolonged periods (> 1 month).

2.3 QC Procedures

These meters should be check and calibrated against standards each quarter following procedure as directed by the QA officer at a QA and meter calibration session. Values will be recorded in the equipment logbook. Each quarter the meters will be calibrated with primary Formazin standards (<0.1, 20, 100, and 800). At that time, the standards will be assigned calibration values. The sampling cells will also be calibrated to find the lowest turbidity reading for that cell.

The collection of QA samples should follow the procedure specified in the **Preparation of Spike, Duplicate, and Blank Samples for Routine QA SOP**.

3.0 REFERENCES

APHA, AWWA, and WPCF (1995) Standard Methods for the Examination of Water and Wastewater, 19th edition, eds. L.S. Clesceri, A.E. Greenberg, and R.R. Trussell, American Public Health Association, Washington, D.C.

Hach (1996), "Portable Turbidimeter Model 2100P Instrument and Procedure Manual", Hach Company, Loveland Colorado.

4.0 APPENDIX A

STANDARD OPERATING PROCEDURE
Field Summary

Turbidity Measurement

Instrument/Method Calibration
Read the StablCal calibration standards before initial sample collection. If the calibration check is deviates by more than the greater of 5% or 1 ntu from the StablCal standard, the meter probably needs to be recalibrated. Clean the outside of the standards and inspect for scratches or other factors that may influence the reading. DO NOT use the StablCal standards to recalibrate the unit. If no reason for the erroneous values can be determined, consult the QA Officer. Samples can be collected and preserved in the dark at 4°C for laboratory analysis (48 hour holding period). The meter should be calibrated at the quarterly QA session or sooner if drift from StablCal standards is identified during daily calibration checks.

Equipment Operation & Preparation
- The Model 2100P & 2100 Q operate on 4 AA-cell batteries. Before going to the field, switch meter on using **I/O** power key and check for battery strength. If no reading occurs or if there is a battery symbol flashing in the lower left-hand side of the screen, change all 4 batteries.
- Clean the sample collection cell, look for scratches or any other factors which may influence light scattering or absorption.

Sample Collection
- Perform a calibration check on StablCal standards daily prior to collection of water samples. Record the values on the **Sampling Episode Sheet**. Values should not deviate by more than the greater of 5% or 1 ntu.
- Water samples should be collected from mid channel, from an area of flowing water. Care should be taken to avoid collection of any surface scum.
- Fill the sample cell to the line with approximately 15-mL of sample.
- Cap the sample cell. Clean the outside of the cell with a soft, lint-free cloth to remove fingerprints and water spots.
- Apply a thin film of silicone oil. Wipe with a soft, lint-free cloth to obtain an even film over the entire surface.
- Press **I/O** button. Place on flat, steady surface.
- Put the sample cell in the instrument cell compartment so the white diamond or orientation mark aligns with the raised mark in front of the cell compartment. Close the cover.
- Press **READ**. The display will show "- - - - **NTU**" then the turbidity value in NTU. Record the turbidity after the lamp symbol in the lower left corner of the screen turns off. Record value on the **Site Collection Sheet**.

Operational Notes
- Air bubbles in the sample will cause false high readings. Before covering the cell with the light shield, observe the sample in its cell. If finely divided air bubbles are present, consult the owner's manual. The Hach owner's manual provides 4 methods for removing air bubbles. The vacuum method is the preferred option. Letting the sample stand for a period time is not recommended because the particles may settle, resulting in a biased reading.
- When measuring high amounts of turbidity, it may be necessary to dilute the sample in order to bring it within the range of the instrument. If the sample is extremely turbid or highly colored, the meter may read less than the actual amount of turbidity present. When a sample appears to contain more turbidity than the meter reads, <u>the sample should be diluted with another portion of sample that has been filtered</u>. <u>Diluting with distilled or deionized water may dissolve some of the turbidity</u>. The re-measured turbidity of the diluted sample should then be multiplied by the dilution factor to obtain the turbidity of the original sample. If the accuracy of the reading is still questionable, further dilutions should be conducted.
- Condensation on the outside of the sample cell may occur under certain humidity and temperature conditions. Condensation will interfere with the sample reading. Let the sample equilibrate to the ambient air temperature for a short period. Use a dry, lint free cloth to wipe the moisture from the outside of the cell. Avoid settling and significant temperature changes; read the sample as soon as possible. Mix the sample thoroughly before measurement.

OKLAHOMA CONSERVATION COMMISSION
WATER QUALITY DIVISION

STANDARD OPERATING PROCEDURE

VEHICLE USE AND MAINTENANCE

1.0 PROCEDURAL SECTION

1.1 Scope and Application

All vehicles in the water quality fleet have an individual staff member responsible for its maintenance. Other individuals using the vehicles must follow a set of guidelines to facilitate the process. This document will serve as guidance to those responsible for the care of OCCWQ vehicles and their proper usage.

1.2 Policy

This SOP addresses the vehicle driving policy and the maintenance and upkeep of Water Quality vehicles. Comprehensive documents with State policy are available from the OMES Fleet Management website:

https://www.ok.gov/DCS/Fleet_Management/index.html

1.2.1 Driving Policy

a. vehicle check-out sheet
b. fueling
c. insurance
d. accident reports
e. acceptable vehicle usage

1.2.1a Vehicle Check-Out

- Drivers must be employed by the Oklahoma Conservation Commission and possess a valid Oklahoma driver's license.
- Any vehicle may be checked-out for use; however, some vehicles are regularly used by certain individuals. You must check with that individual before taking the vehicle.
- Vehicular check-out policy is as follows:
  - i. Check out the vehicle by signing your initials to the online schedule.
  - ii. On the date reserved, obtain the keys and vehicle book.
  - iii. Record the following information in the vehicle book:
    - Date
    - Driver
    - Odometer starting and ending mileage
    - Total miles traveled
    - Travel location
    - Number of people traveling
    - Purpose for travel
  - iv. Return book at the end of the trip.

1.2.1b Fueling

- Fuel can only be purchased using a COMDATA card that has been assigned to the vehicle to be driven. This card should be located on the key chain. This credit card is not transferable and must be used only with the vehicle bearing the number imprinted on the card. The credit card will guarantee the service station, oil company, and the driver that each sales slip will have all the necessary information for immediate processing and prompt payment.
- Not all service stations will honor the COMDATA card. The driver should clear this card with the attendant before pumping gas.
- After fueling, follow the instructions provided by the attendant. You will need to enter the pin number for the vehicle and the vehicle mileage.
- It is not necessary to keep the receipt of the transaction.
- Record the expense in the vehicle book.

1.2.1c Vehicle Insurance

- The office of Public Affairs, Risk Management Division, will provide liability insurance for all State vehicles. Protection is provided to the State of Oklahoma and state employees for any liability resulting from accidents arising out of the use of a state-owned vehicle or a personal vehicle used for work if the supervisor has given clearance. The insurance will pay all sums that the State or the driver becomes legally obligated to pay.
- The State does **not provide** for any type of medical insurance for the state driver or any passengers in the vehicle.

- The State does not provide for the loss of personal property by fire or theft. Risk Management **does** insure the loss of State property in transit.

1.2.1d Accident Reports

- In case of an accident follow the procedure listed below:
  i. Turn off the engine and set the emergency brake.
  ii. Call 911. Do not move injured individuals unless absolutely necessary. Do not tell the injured part that the State will accept responsibility for medical expenses.
  iii. **DO NOT ADMIT FAULT**.
  iv. Provide Risk Management Contact Card (with your name and agency) to the third part involved in an accident to file a claim with the State. (see Appendix A)
  v. Contact the Oklahoma Conservation Commission immediately from the scene. Ask agency personnel to notify your supervisor, the fleet management administrator, and the agency Risk Coordinator.
  vi. Do not sign any statement about an accident.
  vii. Fill out a written report. The report form is the Risk Management Accident Reporting Form (see Appendix A). Do not give this form to anyone at the accident scene. Provide the completed form to the Agency Risk Coordinator (original) and the fleet management administrator (copy).
- You must fill out the Risk Management Accident form even if no other vehicle is involved. The completed form must be turned in to your supervisor.

1.2.1e Vehicle Usage

- All drivers of State Vehicles must possess a valid driver's license.
- State vehicles may only be used for State business—no personal use.
- Drivers must obey all traffic laws.
- The use of cell phones is only permitted while the vehicle is safely and legally parked on the side of the road.
- Drivers and passengers must wear seatbelts at all times while the vehicle is in motion.
- No unauthorized individual may be permitted to drive a State vehicle.
- Passengers must be state or district employees or directly associated with an authorized program activity such as a training program or a program volunteer.
- Drivers are not allowed to pick-up hitchhikers.
- Failure to comply with these requirements will be taken into consideration in determining whether an employee is within the scope of employment for purposes of tort liability for motor vehicle accidents. Employees acting within the scope of their employment will ordinarily not be liable for damages in such cases.

1.2.2 Vehicle Maintenance Policy

a. Care and Maintenance
b. Repairing Damage
c. Vehicle Mileage

1.2.2a Care and Maintenance

i. Vehicles should be clean and not cluttered with equipment and trash. Clean trash and equipment out of the vehicle daily; wash the vehicles monthly or as needed. Never leave vehicle with less than ¼ of a tank of fuel.
ii. The maintenance schedule in the owner's manual should be followed to maintain optimum vehicle performance and efficiency. This includes but is not limited to:
   - Engine oil and filter changes
   - Tire and wheel rotation
   - Replacing spark plugs and wires
   - Belt inspection and replacement
iii. All maintenance items will be carried out regularly and recorded in the maintenance log located in the front of all vehicle logbooks (attachment). Responsible parties for all vehicles leased from Fleet Management and stationed in or near the Oklahoma City metro or at District Offices <u>must</u> call the State Fleet Management at (405) 521-2204 to get prior authorization for any maintenance work. This includes oil changes, car washes and any repairs. Try to do this where the COMDATA card is honored.
iv. Always obtain an estimate for the service to be performed before having the work started.
v. For leased vehicles, call the State Fleet Management to obtain a purchase order number, and make sure the number is written on the invoice. For OCC owned vehicles, work with your supervisor.
vi. Make sure the invoice for leased vehicles is faxed to the State Fleet Management at (405) 525-2682.

vii. Vehicle logbooks are to be kept with the vehicles with entries made promptly.

1.2.2b Repairing Damage

If your vehicle is leased from Fleet Management:

i. Call your supervisor immediately.

ii. Emergency repairs must be reported to Fleet Management on the day the emergency occurs. Call Fleet Management (405-521-2206) and get prior authorization for any repair. If the emergency is after hours, it must be reported on the first working day following the emergency.

iii. If the vehicle is damaged and repair work is needed, repairs should be made promptly. If the vehicle is not drivable, call the Network Car Roadside Assistance service (information in above section) and have the vehicle towed in; the wrecker service will bill for this service. Have the garage evaluate the vehicle's condition and make a repair estimate. Call Fleet Management at (405) 521-2206 with this estimate to obtain a purchase order for this repair. To obtain a purchase order you will need the following information:

- Vendor's name, address, and telephone number
- Vehicle number
- Quantity and cost of each item used
- Labor time and charge
- **No state sales tax is to be charged**

iv. Direct all invoices and sales slips to Fleet Management, 317 NE 31st Street, Suite A, Oklahoma City, Oklahoma, 73105.

If your vehicle is owned by OCC:

i. Call your supervisor immediately.

ii. If the vehicle is damaged and repair work is needed, repairs should be made promptly. If the vehicle is not drivable, call the Network Car Roadside Assistance service (information in above section) and have the vehicle towed in; the wrecker service will bill for this service. Have the garage evaluate the vehicle's condition and make a repair estimate. Call your supervisor with the following information:

- Vendor's name, address, and telephone number
- Vehicle number
- Quantity and cost of each item used
- Labor time and charge
- **No state sales tax is to be charged**

iii. Work with your supervisor or other assigned OCC employee to make payment arrangements.

1.2.2c Vehicle Mileage

i. Vehicle mileage will be reported to the Administrative Assistant,, on the last working day of the month.

ii. Mileage will be recorded in the vehicle maintenance log with every use of the vehicle.

Appendix A: Risk Management Contact Card and Accident Information Form

A copy of the Risk Management Contact Card and Accident Information Form should be kept in the glove box of every vehicle. Additional copies may be obtained from Fleet Management.

Risk Management Contact Card

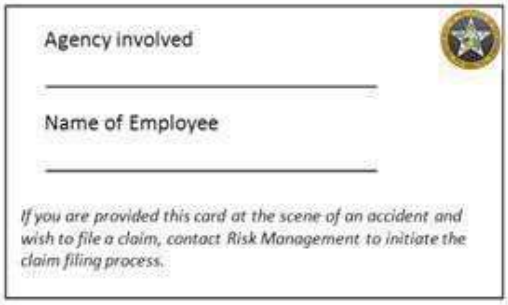

STEP #8

Get witnesses (if available).

Attach additional page, if necessary

Name Phone no.

Address

STEP #9

Record facts about other property damage.
(Non-vehicular)

Owner's Name Phone No.

Address

Property Damaged

Nature of Damage (be brief)

Signature of Employee Date

DCAM/RISK MGMT - FORM 009 (04/2017)

STATE OF OKLAHOMA

Risk Management Department
P.O. Box 53364
Oklahoma City, OK 73152-3364
405-521-4999

STATE WIDE TOLL-FREE
(agency use only)

1-888-521-RISK (7475)

FORMS CAN BE FOUND ON THE RISK MANAGEMENT WEBSITE

www.ok.gov/DCS/Risk_Management/index.html

OMES
OFFICE OF MANAGEMENT & ENTERPRISE SERVICES

ACCIDENT INFORMATION FORM

THIS FORM IS NOT TO BE GIVEN TO THE OTHER DRIVER

RM CARD IS TO BE GIVEN TO THE OTHER DRIVER

Keep accident information form and RM card in the glove compartment of all state and personal vehicles.

STEP #1

Assist the injured.

- Do not move injured individuals unless absolutely necessary.
- Do not tell the injured party the state will accept responsibility for medical expenses.
- Take photographs of the scene including, but not limited to, area surrounding the accident and damage to vehicles involved.

Do not comment.

- Do not admit any fault.
- Only give information required by authorities.
- Do not sign any statement except from an authorized representative of the Risk Management department or your agency's authorized legal counsel.

STEP #2

Call the police or 911.

Give exact location and advise if medical help is needed. Write down the name(s) and badge number(s) of police officer(s) who assist you.

Name: _____

Badge #: _____

Traffic Citation issued to:

☐ State Employee ☐ Other Driver

STEP #3

Call your supervisor and/or risk coordinator.

Contact your supervisor immediately. Complete a Standard Liability Incident report and a Scope of Employment form and send to your agency risk coordinator upon return your office.
Risk coordinators will contact state Risk Management immediately.

STEP #4

Record the facts of the incident.

DATE OF INCIDENT: _____

TIME: _____ A.M. or P.M.

LOCATION OF INCIDENT:

_____

Describe the incident:

_____

_____

_____

STEP #5

Facts about your vehicle.

Agency _____ Department _____

Driver's Name _____

Department Phone # _____

Make/Year _____ Tag No. _____

What part of vehicle is damaged? _____

STEP #6

Obtain facts about other vehicle.

Name _____ Phone No. _____

Address _____

Make/Year _____ Tag No. _____

Driver's License No. _____

Insurance Co. _____

Policy Number _____

What part of vehicle is damaged? _____

STEP #7

Obtain facts about injured person(s).

Attach additional page if necessary

Name _____ Age _____

Address _____ Phone No. _____

Injured Party:

☐ In State Vehicle ☐ Pedestrian
☐ In Other Vehicle

(CONTINUE TO STEP #8)

Appendix B: Vehicle Use Agreement Form

I understand the vehicle policy presented in this SOP and agree to follow the procedures specified.

Signature	**Date**

OKLAHOMA CONSERVATION COMMISSION
WATER QUALITY DIVISION

STANDARD OPERATING PROCEDURE

WINKLER TITRATION FOR
DISSOLVED OXYGEN

(HACH METHOD 8229)

1.0 PROCEDURAL SECTION

1.1 Scope and Application

This method is used during the quarterly QA/QC session as a check of the accuracy (bias) of the field dissolved oxygen meters.

1.2 Summary of Method

The manganous ion reacts with dissolved oxygen present in an alkaline solution to manganese (IV) oxide hydroxide flocculent. Azide is added to suppress any inference from nitrite. The solution is acidified and the manganese (IV) floc is reduced by iodide to produce free iodine as I_3^- in proportion to the oxygen concentration. The liberated iodine is then titrated to the starch-iodine end point with sodium thiosulfate. This summary was taken directly from Hach (1992).

1.2.1 Definitions

Powder Pillows pre-measured amounts of reagents in plastic pillow-like containers

1.3 Health and Safety Warnings

Rubber gloves and safety glasses should be worn during the procedure. The chemicals used during this procedure are eye and skin irritants. Do not eat or smoke around these chemicals—Azide is a Kreb's cycle poison at low concentrations.

1.4 Cautions

None

1.5 Interference

Nitrite interference is eliminated when Azide reagents are used. Other reducing or oxidizing substances may act as inferences.

1.6 Personnel Qualification

Personnel should be trained in the proper use of burets, pipets, graduated cylinders, and indicator solutions. The QA Officer is responsible for approving personnel to perform this procedure.

1.7 Apparatus & Materials

REAGENTS	QUANTITY/TEST	HACH CATALOGUE NUMBER
Alkaline Iodine-Azide Powder Pillows	1 pillow	1072-68
Manganous Sulfate Powder Pillows	1 pillow	1071-68
Sodium Thiosulfate Standard (0.0250 N)	varies w/ titration	24093-16
Starch Indicator Solution	2 mL	349-37
Sulfamic Acid Powder Pillow	1 pillow	1073-99
Iodate-Iodide Standard Solution (0.00125 N)[1]	200 mL	401-11

1: The Iodate-Iodide Standard Solution (0.00125 N) is used for determining the quality of the Sodium Thiosulfate Standard. This reagent is only needed when the strength of the Sodium Thiosulfate Standard is being evaluated.

EQUIPMENT	QUANTITY/ EXPERIMENT	HACH CATALOGUE NUMBER
300-mL BOD bottle with stopper	3	621-00
25-mL Buret, (Nalgene Class B)[1]	1	14059-40
250-mL graduated cylinder (Class B)[2]	1	508-46
250-mL Erlenmeyer flask	3	505-46
Powder pillow clippers	1	968-00
Buret clamp, double	1	328-00
Support Stand	1	563-00

1: Although a Class A buret is mentioned in the Hach procedure, a plastic Class B was selected for safety, economics, and lack of consequential difference in accuracy. The Class A burets have a tolerance of ±0.03 ml vs. ±0.06 ml for Class B.

2: A Class B graduated cylinder was selected because the difference between the Class A and Class B cylinders was within the tolerance limits (Class A ±0.8 ml. vs. Class B ±1.4 mL) of the experiment.

1.8 Procedure (Hach, 1992)

For technical assistance, call Hach at (800) 227-4224.

1. Collect water sample in a clean 300-mL BOD bottle with glass stopper. The water sample must be collected to minimize aeration of sample during bottle filling. If water being tested is not near saturation, collect the sample away from air water interface.
2. Add the contents of one Manganous Sulfate Powder Pillow and one Alkaline Iodide-Azide Reagent Powder Pillow.
3. Immediately insert the stopper so that no air is trapped in the bottle. Invert several times to mix. A flocculent precipitate with form. It will be orange-brown if oxygen is present and white if oxygen is absent.
4. Wait until the floc has settled or at least 5 minutes. Invert the bottle again several times and wait until it has settled a second time. Allowing the floc to settle twice assures complete reaction. Results will not be affected if the floc does not settle.
5. Remove the stopper and add the contents of one Sulfamic Acid Powder Pillow. Replace the stopper without trapping air in the bottle and invert several times to mix. The floc will dissolve and leave a yellow color if oxygen is present. (One mL of concentrated H_2SO_4 can be substituted for one Sulfamic Acid Powder Pillow.)
6. Measure 200 mL of the prepared sample in a graduated cylinder
7. Pour the contents of the graduated cylinder into a 250-mL Erlenmeyer flask.
8. Fill a 25-mL buret to the zero mark with 0.025 N Sodium Thiosulfate Solution
9. Titrate the sample with the 0.025 N Sodium Thiosulfate Solution until the solution turns a pale yellow color.
10. Add two dropperfuls of starch indicator (2 mL) and swirl to mix.
11. Continue to titrate until the solution changes from dark blue to colorless.
12. Record the final mL value for 0.025 N Sodium Thiosulfate Solution. Determine the mg/L DO:

1 mL titrant = 1 mg/L DO

1.9 Data Management & Records Management

1.9.1 Data Notation

Result of the Winkler titration should be recorded on the QA Officer's data sheet. This information will be used to check the meter values recorded by the field personnel.

1.9.2 Chain of Custody Procedure

Not Applicable.

2.0 QA/QC SECTION

2.1 Training

The QA Officer will assign and/or train personnel to conduct the Winkler titration. The experimenter must be familiar with the procedure described in the Hach Method 8229 (Hach, 1992). The experimenter must demonstrate proficiency prior to conducting the test during the quarterly QA session.

2.2 Maintenance

It is the experimenter's responsibility to ensure the reagents are available and not expired, the glass ware is clean and intact, and that all of the appropriate items necessary to conduct the experiment are available.

2.3 QC Procedures

The strength of the Sodium Thiosulfate Solution should be checked at least once a year until it expires. An iodate-iodide standard solution can be used as a check. Hach sells a 0.00125 N solution, which is equivalent to 10 mg/L as DO.

1. Measure 200 mL of 0.00125 N Iodate-Iodide Standard Solution. Pour into a 250 mL-Erlenmeyer flask.
2. Add the contents of one Sulfamic Acid Powder Pillow.
3. Fill a 25-mL buret to the zero mark with 0.025 N Sodium Thiosulfate Solution.
4. Titrate the sample with 0.025 N Sodium Thiosulfate Solution until the solution turns colorless.
5. The volume of the titrant should be 10 mL. If it is greater than 10.5 mL, the titrant should be discarded and new Sodium Thiosulfate Solution should be purchased.

3.0 REFERENCES

Hach (1992) Water Analysis Handbook, Hach Company, Loveland Colorado pp.455-457.

SOP APPENDIX:
DATA SHEETS

Form Updated: 10-28-2019

SAMPLING EPISODE SHEET

TASK #:_____ **PROJECT NAME:**_____ **SITE DATE:**_____

LEAD INVESTIGATOR:

_____

SITE NAMES WITH

WBID'S:_____

_____

_____

_____

_____

_____

QA/QC SAMPLES COLLECTED? Y N

_____
SITE NAME

_____
WBID

_____
SITE DATE SITE TIME

FIELD QA/QA READINGS

	BLANK	DUP	TEMPORAL OR SPATIAL REPLICATE
DO	XXXXXX	XXXXXX	_____
DO % SAT	XXXXXX	XXXXXX	_____
TURB	_____	_____	_____
ALK	_____	_____	_____
HARDNESS	_____	_____	_____
CONDUCTIVITY	XXXXXX	XXXXXX	_____
pH	XXXXXX	XXXXXX	_____
FLOW	XXXXXX	XXXXXX	_____

CALIBRATION CHECKS
(completed daily prior to data collection)

Parameter	Standard	Sensor (Pre)	Difference	Sensor (Post)	GLP read	GLP Value	Recon. Necessary
Temperature	_____ºC (THERM)	_____ºC	_____ºC	XXXXXX	XXXXXX	XXXXXX	yes / no (diff ≤0.5 ºC)
Conductivity	_____uS/cm	_____uS/cm	Pre % _____uS/cm	_____uS/cm	Cell Constant	_____	yes / no (cell 4 to 6)
pH	4 (165 to 180 mV from 7)	_____mV	XXXXXX	XXXXXX	slope	_____mV	yes / no (slope 55 to 60)
	7 (-50 to 50 mV)	_____mV	XXXXXX	XXXXXX	% ideal	_____%	
	10 (-165 to -180 mV from 7)	_____mV	XXXXXX	XXXXXX	XXXXXX	XXXXXX	
DO	_____mg/l (Theor) _____ft _____ºC	_____mg/l	Post % _____mg/l	_____mg/l	sensor current	_____uA	yes / no (Diff <5% theor.) (Current 4 31 to 8 uA)
Turbidity (l)	_____ntu	_____ntu	_____% _____ntu	XXXXXX	XXXXXX	XXXXXX	yes / no (Diff <5% or <1 NTU)
Turbidity (m)	_____ntu	_____ntu	_____% _____ntu	XXXXXX	XXXXXX	XXXXXX	
Turbidity (h)	_____ntu	_____ntu	_____% _____ntu	XXXXXX	XXXXXX	XXXXXX	

WQ EQUIPMENT ID NUMBERS

pH _____ **DO** _____

Cond _____ **Turb** _____

Alk _____ **Flow** _____

Hard _____ **Oth** _____

Trip Blank ID _____

COMMENTS (use back if necessary):

FOR OFFICE USE ONLY

BINDER_____**BID**_____**TID**_____**EID**
_____

Form updated: 05/31/2017

SITE COLLECTION SHEET

SITE NAME: _____ **WBID #:** _____

LEGAL/COUNTY: _____ **DATE (MO/DY/YR):** _____

C-O-C: _____ _____ _____ _____ **TIME (MILT):** _____ **HRS**
WQ/BAC BUGS FISH OTHER

INVESTIGATOR(S): _____

COMPLETED SITE ACTIVITIES

___WQ SAMPLES / COLLECTION CODE:
010 020 031 041 _____
___BACTERIA COLLECTION
___FLOW TYPE: 1 - EST 2 - SS OBJ/TIMED
3 - METER 8 - AUTO-SAMPLER
___BUGS ___BUGS NOT COLLECTABLE
___FISH
___PHOTOGRAPHS
___STREAM HABITAT ASSESSMENT
___OTHER _____

TOTAL LENGTH OF STREAM SEGMENT OBSERVED: _____ IN METERS

2 - CLEAN
3 - MANURE IN-STREAM
4 - UNSIGHTLY APPEAR (COLOR)
5 - FOAM/SCUM
6 - FLOATING DETRITUS
7 - TRASH
8 - SIGNIFICANT ALGAE
9 - FISH KILL
10 - DEAD ANIMAL(S) IN-STREAM
11 - IRON PRECIPITATES
12 - SILTATION
13 - FLOW ALTERATION
14 - HABITAT ALTERATION
15 - OILY FILM/GREASE
16 - OFFENSIVE ODOR
17 - EXOTIC SPP
18 - OTHER - DISCUSS IN COMMENTS
19 - RECENT CATTLE ACTIVITY IN STREAM

WEATHER

(CIRCLE ONLY ONE)

AIR TEMP: _____ °C

1 - FAIR SKIES
2 - OVERCAST
7 - RAIN
8 - HEAVY RAIN
9 - SNOW/SLEET/ICE

CANOPY COVER

(CIRCLE ONLY ONE)

1 - SPARSE (0-10%)
2 - MODERATE (10-40%)
3 - SIGNIFICANT (40-60%)
4 - DENSE (>60%)
7 - EXTREMELY DENSE (≥80)

PERIPHYTON INFORMATION

PERIPHYTON DENSITY (CIRCLE ONLY ONE)

1 - ABSENT
2 - SPARSE
3 - MODERATE
4 - ABUNDANT

HABITAT OBSERVED (CIRCLE ALL THAT APPLY)

1 - RIFFLE
2 - POOL
3 - RUN

MACROPERIPHYTON IN-STREAM COVER: _____ %

MACROPERIPHYTON TYPE

FILAMENTOUS	1 - COMMON	2 - PRESENT
NON-FILAMENTOUS	1 - COMMON	2 - PRESENT
AQUATIC MOSS	1 - COMMON	2 - PRESENT

PHYSICAL/CHEMICAL DATA

DO FROM:		% DO SATURATION
RUN	_____ mg/L	_____ %
RIFFLE	_____ mg/L	_____ %
POOL TOP	_____ mg/L	_____ %
PL BOTTOM	_____ mg/L	_____ %

WATER TEMP _____ °C
CONDUCTIVITY _____ µS
pH _____ SU
ALK (PPM) _____ $CaCO_3$
HARDNESS (PPM) _____ $CaCO_3$
TURBIDITY _____ NTU
TURB CAUSE: ORGANICS INORGANICS
RAINFALL AFFECTED TURBIDITY? Y N

FLOW INFORMATION

STREAM STAGE (CIRCLE ONLY ONE)

1 - DRY1 - STABLE
2 - NO FLOW
*3 - TRACE
4 - LOW FLOW
5 - BASE FLOW
6 - SLIGHTLY ELEV
7 - ELEVATED
8 - ELEV/NO FLOW
9 - HIGH FLOW

STAGE QUALIFIER (CIRCLE ONLY ONE)

2 - RISING
3 - FALLING
4 - UNKNOWN

***INCLUDE ESTIMATED DISCHARGE**

_____ DISCHARGE (CFS)
_____ GAUGE HT (FT)

OBSERVED LANDUSE

SOURCE CODE	QUALIFIER: NONE	PROBABLE	DEFINITE
_____	1	2	3
_____	1	2	3
_____	1	2	3
_____	1	2	3

COMMENTS:

CALIBRATION DATA

DO OBS _____ TEMP _____
ELEVATION _____ FT

FOR OFFICE USE ONLY

FISH COLLECTION SHEET

Form updated: 5/26/2017

SITE NAME:_____ WBID #:_____

LEAD INVESTIGATOR:_____ DATE:_____ TIME (MILT):_____

	TIME	VOLTS	RANGE	AMPS	PULSES/SEC	DUTY CYCLE	REACH LENGTH	PROBE USED
BACKPACK SHOCKER	SEC		N/A			%	METERS	N/A
BOAT-MOUNTED SHOCKER	SEC	N/A	(circle one) Low Range High Range			%	METERS	(circle one) HANDHELD UMBRELLA
SEINING	TIME:	MIN	SEINE TYPE/SIZE:					

FISH IDENTIFIED & RELEASED IN THE FIELD

SPECIES	COUNT SHOCK	COUNT SEINE	COMMENTS	FISH PHOTO ID OR "√" YES
1				
2				
3				
4				
5				
6				
7				
8				
9				
10				
11				
12				
13				
14				
15				
16				
17				
18				
19				

COMMENTS:

FOR OFFICE USE ONLY

FLOW METER DATA SHEET

Form Updated: 05/26/2017

SITE NAME:_____ WBID #:_____

	DIST from START	WIDTH	TOT DEPTH (FT)	VELOCITY@ 20%	VELOCITY@ 60%	VELOCITY@ 80%	COMMENTS
1							
2							
3							
4							
5							
6							
7							
8							
9							
10							
11							
12							
13							
14							
15							
16							
17							
18							
19							
20							
21							
22							
23							
24							
25							
26							
27							
28							
29							
30							
31							
32							

FOR OFFICE USE ONLY

MACROINVERTEBRATE HABITAT ASSESSMENT

Form updated: 05/31/2017

SITE NAME:_____ WBID #:_____

LEAD INVESTIGATOR:_____ DATE:_____ TIME (MILT):_____

RIFFLE
('X' OUT IF NOT COLLECTED)

% OF SAMPLE COLLECTED: _____%

UNIT OF EFFORT: _____M2

EMBEDDEDNESS _____%

CPOM IN SAMPLE
1 - ABSENT (0%)
2 - SPARSE (>0, <5%)
3 - MODERATE (>5, <25%)
4 - ABUNDANT (>25%)

SUBSTRATE TYPE & PERCENT (%)
1 - SILT & CLAY _____%
2 - SAND _____%
3 - GRAVEL _____%
4 - COBBLE _____%
5 - BOULDER _____%
6 - BEDROCK _____%
7 - HARD PAN CLAY _____%

SUBSTRATE ROUGHNESS
1 - LOW (>75% REMOVED)
2 - MODERATE (>25,<75%)
3 - HIGH (<25%)

VELOCITY TYPICAL MAXIMUM
1 - LOW (0.2-0.5 FPS; 0.061-0.15 MPS)
2 - MEDIUM (0.5-1 FPS; 0.152-0.305 MPS)
3 - HIGH (>1 FPS; 0.305 MPS)

NON- *FILAMENTOUS ALGAE*
1 - SPARSE (THIN FILM)
2 - MODERATE (SLIGHTLY FUZZY < 5 MM)
3 - ABUNDANT (DEFINITELY FUZZY > 5 MM)

FILAMENTOUS ALGAE
1 - ABSENT (0%)
2 - SPARSE (> 0, < 5%)
3 - MODERATE (> 5, < 25%)
4 - ABUNDANT (> 25%)

AQUATIC MOSS
1 - ABSENT (0%)
2 - SPARSE (> 0, < 5%)
3 - MODERATE (> 5%, < 25%)
4 - ABUNDANT (> 25%)

STREAMSIDE VEGETATION
('X' OUT IF NOT COLLECTED)

% OF SAMPLE COLLECTED: _____%

UNIT OF EFFORT: _____MIN

CPOM IN SAMPLE
1 - ABSENT (0%)
2 - SPARSE (>0, <5%)
3 - MODERATE (>5, <25%)
4 - ABUNDANT (>25%)

PRESENCE
1 - OCCASIONAL (> 50 M FOR SAMPLE)
2 - COMMON (10-50 M FOR SAMPLE)
3 - ABUNDANT (10 M FOR SAMPLE)

TYPE (>1/4 OF SAMPLE)
1 - GRASS-LIKE LEAVES
2 - FINE ROOTS
3 - COARSE ROOTS
4 - *LUDWIGIA* STEMS (WATER WILLOW)

VELOCITY TYPICAL MAXIMUM
1 - LOW (0.2-0.5 FPS; 0.061-0.15 MPS)
2 - MEDIUM (0.5-1 FPS; 0.152-0.305 MPS)
3 - HIGH (>1 FPS; 0.305 MPS)

NON- *FILAMENTOUS ALGAE*
1 - SPARSE (THIN FILM)
2 - MODERATE (SLIGHTLY FUZZY < 5 MM)
3 - ABUNDANT (DEFINITELY FUZZY > 5 MM)

FILAMENTOUS ALGAE
1 - ABSENT (0%)
2 - SPARSE (> 0, < 5%)
3 - MODERATE (> 5, < 25%)
4 - ABUNDANT (> 25%)

WOODY DEBRIS
('X' OUT IF NOT COLLECTED)

% OF SAMPLE COLLECTED: _____%

UNIT OF EFFORT: _____MIN

CPOM IN SAMPLE
1 - ABSENT (0%)
2 - SPARSE (>0, <5%)
3 - MODERATE (>5, <25%)
4 - ABUNDANT (>25%)

PRESENCE
1 - OCCASIONAL (> 50 M FOR SAMPLE)
2 - COMMON (10-50 M FOR SAMPLE)
3 - ABUNDANT (10 M FOR SAMPLE)

SIZE
1 - SMALL (0.6-2.0 CM)
2 - MEDIUM (2.0-7.5 CM)
3 - LARGE (> 7.5 CM)

STATE OF DECAY
1 - LOW (INDENTATION 0 - 0.5 MM)
2 - MEDIUM (INDENTATION 0.5 - 2 MM)
3 - HIGH (INDENTATION >2 MM)

VELOCITY TYPICAL MAXIMUM
1 - LOW (0.2-0.5 FPS; 0.061-0.15 MPS)
2 - MEDIUM (0.5-1 FPS; 0.152-0.305 MPS)
3 - HIGH (>1 FPS; 0.305 MPS)

NON- *FILAMENTOUS ALGAE*
1 - SPARSE (THIN FILM)
2 - MODERATE (SLIGHTLY FUZZY < 5 MM)
3 - ABUNDANT (DEFINITELY FUZZY > 5 MM)

FILAMENTOUS ALGAE
1 - ABSENT (0%)
2 - SPARSE (> 0, < 5%)
3 - MODERATE (> 5, < 25%)
4 - ABUNDANT (> 25%)

COMMENTS:

FOR OFFICE USE ONLY

MACROINVERTEBRATE PICKING DATA

Form updated: 5/31/2017

PICKING DATE: _____

SITE NAME: _____ WBID: _____

PICKER: _____ SITE DATE: _____

C-O-C NO.: _____ LAB LOG NO.: _____ SITE TIME: _____

SAMPLE TYPE (CIRCLE ONE): RIFFLE VEGETATION WOODY

SAMPLE DESCRIPTION: _____ _____%

_____ _____%

_____ _____%

_____ _____%

_____ _____%

_____ _____%

_____ _____%

PROPORTION OF SAMPLE PICKED: _____ OR PERCENTAGE OF SAMPLE PICKED:

SQUARE #							
# ORGANISMS							

SQUARE #							
# ORGANISMS							

SQUARE #							
# ORGANISMS							

SQUARE #							
# ORGANISMS							

TOTAL NUMBER OF ORGANISMS PICKED: _____

FOR OFFICE USE ONLY

Blue Thumb Data Sheet

Site Name: _____ WBID #: _____

Legal: _____ County: _____ Date (MM/DD/YY): _____

Lat: _____ Long: _____ Site Time (Military): _____

Samplers: _____

_____

SITE CONDITIONS: Enter the numeric code or wind direction from each column in the boxes.

WEATHER:
1. Fair Skies
2. Overcast
3. Haze
4. Fog
5. Drizzle
6. Intermittent Rain
7. Rain
8. Heavy Rain
9. Snow/Sleet/Ice

WIND SPEED:
1. Calm (<1 mph)
2. Light air; smoke drift (1-3 mph)
3. Light breeze; felt on face (4-7 mph)
4. Leaves/twigs move/flag extends (8-12)
5. Branches move/dust, paper blow (13-18)
6. Small trees sway (19-24 mph)
7. Large branches sway/umbrella hard to use (25-31 mph)
8. Hard to walk (32-38 mph)
9. Other (branches breaking/roofing flying/trees uprooted)

WIND DIRECTION:
(From which wind is blowing)

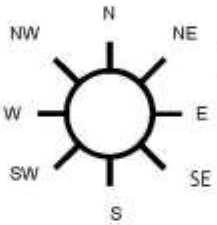

STREAM STAGE:
1. Dry
2. No flow
3. Trace
4. Low flow
5. Base flow
6. Slightly elevated
7. Elevated
8. Elevated/No Flow
9. High flow

STAGE QUALIFIER:
1. Stable
2. Rising
3. Falling
4. Unknown

WATER CLARITY/SECCHI DEPTH:

This information will be entered on the next page.

Is Secchi disk visible while resting on the bottom of the stream?

Yes No

TEMPERATURE: Air: _ This information will be entered on the next page. t
Measure both for 2 minut

STREAM SITE OBSERVATIONS: Check *all* that apply then discuss in comments:

Press [Enter] or click mouse to check box.

- 1. Not applicable
- 2. Clean
- 3. Manure in stream
- 4. Unsightly appearance (color)
- 5. Foam/Scum
- 6. Floating Detritus
- 7. Trash
- 8. Significant algae
- 9. Fish kill
- 10. Dead animal(s) in stream
- 11. Iron precipitates
- 12. Siltation
- 13. Flow alteration
- 14. Habitat alteration
- 15. Oily film/Grease
- 16. Offensive odor
- 17. Exotic Spp
- 18. Other – Discuss in comments
- 19. Recent Cattle Activity in stream

Comments

Need Reagents/Supplies

Bacteria Worksheet

Sample Volume [ ] mL

		Violet Count	CFUs		Pink and Violet Count	CFUs
Dish 1	*E. coli*		0	Total Coliforms		0
Dish 2	*E. coli*		0	Total Coliforms		0
Dish 3	*E. coli*		0	Total Coliforms		0

Instructions for Bacteria Worksheet

1. Enter the volume of stream water you used in the test.
2. Enter the count of violet colonies in the E. coli box for each dish.
3. Enter the count of pink and violet colonies in the Total Coliforms box for each dish.

This worksheet will calculate the colony forming units /100 mL of water (CFUs). The calculated values of CFUs should be entered into the table below. If you quit counting colonies because the number was greater than 300, be sure to note that in the table by choosing greater than (>).

Type	Parameter	< or >	Result	Units	Comments
Test 1	Secchi Depth			Meters	
Test 1	Temperature, Air			°C	
Test 1	Temperature, Water			°C	
Test 1	DO (Run)			mg/L DO	
Test 2	DO (Run)			mg/L DO	
Test 1	pH			SU	
Test 2	pH			SU	
Test 1	Nitrate Nitrogen			mg/L N	
Test 2	Nitrate Nitrogen			mg/L N	
Test 1	Nitrite Nitrogen			mg/L N	
Test 2	Nitrite Nitrogen			mg/L N	
Blank	Ammonia Nitrogen			mg/L N	
Test 1	Ammonia Nitrogen			mg/L N	
Test 2	Ammonia Nitrogen			mg/L N	
Blank	Orthophosphate Phosphorus			mg/L P	
Test 1	Orthophosphate Phosphorus			mg/L P	
Test 2	Orthophosphate Phosphorus			mg/L P	
Blank	Chloride			mg/L Cl	
Test 1	Chloride			mg/L Cl	
Test 2	Chloride			mg/L Cl	
Average	*E. coli*		0	CFUs	
Average	Total Coliforms		0	CFUs	

Volunteer Hours

County

Date	Volunteer	Activity	Hours

Comments

Print Form

Submit by Email

Blue Thumb Coliform Data Sheet

Site Name: _____ WBID #: _____

Legal/County: _____ Date (MM/DD/YY): _____

Lat/Long: _____ Site Time (Military): _____

Samplers: _____

Reading Date/Time: _____

Volume of Sample Water

_____ mL

	E. coli count (violet)	Total Coliforms count (violet + pink)
Petri dish 1		
Petri dish 2		
Petri dish 3		
Sum		
Average		

Detection of Waterborne Coliforms and Fecal Coliforms with Coliscan Easygel

Introduction

The Coliscan Easygel medium is a patented formulation for water testing. It contains a sugar linked to a dye which, when acted on by the enzyme β-galactosidase (produced by coliforms including *Eschericia coli*), turns the colony a pink color. Similarly, there is a second sugar linked to a different dye which produces a blue-green color when acted on by the enzyme β-glucuronidase. Because *E. coli* produces both β-galactosidase and β-glucuronidase, *E. coli* colonies grow with a purple color (pink + blue). The combination of these two dyes makes possible the unique ability to use one test to differentiate and quantify coliforms and *E. coli*. (Because *E. coli* is a member of the coliform group, add the number of purple colonies to the number of pink colonies when counting total coliforms.)

Instructions

1. Store the Coliscan Easygel bottles in the freezer. Coliscan Easygel can be refrozen if it has been thawed and not used.
2. The night before monitoring, take three bottles of Coliscan Easygel for each site from the freezer and thaw in the refrigerator.
3. When heading to the site, take the three bottles, a sterile pipette (1 mL), and a small ice chest with ice.
4. Just before leaving the site, take a measured water sample (1 – 5 mL) from the stream with the sterile pipette and place it directly into each of the three bottles of Coliscan Easygel using the same amount of stream water for each bottle. If you are unsure how much water to use, start with 5 mL. Your own experience will tell you if you need to use less next month. Put the Coliscan Easygel bottles on ice until plating the sample. **Note the volume of sample water on this sheet.**
5. Plug in the incubator to begin preheating.

6. Label three Petri dishes with the site name, the date, and the time you pour the sample into the dish. (The larger diameter is the lid.) You must use the dishes we provide!
7. Swirl the Coliscan Easygel bottles to distribute the inoculum and then pour the medium/inoculum mixtures into the Petri dishes. Place the lids back on the Petri dishes. Gently swirl the poured dish until the entire dish is covered with liquid (but be careful not to splash over the side or on the lid.)
8. While the contents of the dish are still liquid, place the dish with the lid side up in a warm level spot. The liquid will solidify in about 30 – 45 minutes.
9. When the medium has solidified in 45 minutes, turn the dish upside down (with the lid side down.) Incubate the Petri dishes 24-48 hours in a preheated incubator at 35°C.
10. Colonies will begin to appear after 24 hours. **The best time to count colonies is after 30 hours of incubation.** Colonies should not be counted after 72 hours. Count the colonies with the dish upside down. Colonies may appear inside the medium. Count all colonies growing on the surface **and** within the medium.
11. To determine the results as ***E. coli*** or Fecal Coliform, count the **purple** (and dark blue) colonies. Disregard any light-blue, blue-green or white colonies.
12. To determine the result as **Total Coliforms** (*E. coli* + non-fecal coliforms) count the number of **pink** and **purple** colonies. Disregard any light blue, blue-green or white colonies.
13. If there are more than 300 CFU (colonies) of one color, the result should be recorded as Too Numerous To Count (TNTC). If the *E. coli* purple colony count is less than 300, even though there are more than 300 total colonies of all colors and types, the purple colonies can be counted and a result given for *E. coli*. Record TNTC for coliforms or non-coliforms that are present at greater than 300 CFU.
14. Count all three Petri dishes and average the results. Be sure to record your results on the data sheet and send it in.
15. Any materials containing living or viable microbes should be disinfected before being discarded. Before disposal in normal trash, treat the Petri dishes by pouring one tablespoon of undiluted household bleach on the dish. Wait 10 minutes. Place the dish in a waterproof bag and discard in the trash.

Interpretation

- Non-fecal coliforms are widely distributed in nature, being found both as naturally occurring soil organisms, and in the intestines of warm-blooded animals and humans. Fecal coliforms, such as *E. coli*, are coliforms found naturally only in the intestines of warm-blooded animals and humans. The presence of fecal coliforms is therefore the result of some form of fecal contamination from either animal or human.
- Be aware of animals, like ducks or geese, which may be upstream from where the sample was taken because their feces will increase the *E. coli* and coliform count temporarily, therefore, the results will not reflect the true nature of the water quality.
- If your results are TNTC or appear to indicate dangerously contaminated water, please call us so we can help you with a dilution and/or have a laboratory test the water.
- A smaller sample size should be used for samples with large *E. coli* concentrations to bring the number of colonies into a practical range. The target range should be between 20 and 300 colonies. Below 20 colonies the results are not significant. Colonies greater than 300 are too numerous to count (TNTC). (A total coliform number TNTC is fine. We are concerned mostly with *E. coli*.)

TIMED FLOW MEASUREMENT DATA SHEET

Form updated: 08/14/2006

SITE NAME:_____ WBID #:_____

LEAD INVESTIGATOR:_____ DATE:_____ TIME (MILT):_____

SURFACE VELOCITY

Trial	Time (sec)
1	
2	
3	
4	
5	
6	
7	
8	
9	
10	
Sum	
Avg	

Record Distance

_____ ft

Avg Surface Velocity

_____ ft/sec

(Divide distance by avg time)

CROSS SECTIONAL AREA

Section #1 (Start Line)				Section #2 (Mid-point)				Section #3 (Finish Line)			
#	Depth (ft)	#	Depth (ft)	#	Depth (ft)	#	Depth (ft)	#	Depth (ft)	#	Depth (ft)
1		11		1		11		1		11	
2		12		2		12		2		12	
3		13		3		13		3		13	
4		14		4		14		4		14	
5		15		5		15		5		15	
6		16		6		16		6		16	
7		17		7		17		7		17	
8		18		8		18		8		18	
9		19		9		19		9		19	
10		20		10		20		10		20	
Sum				Sum				Sum			

A. How far apart were depth measurements taken?
Every 0.5 ft? Every 1 ft? Every 2 ft? _____ ft

B. Average value of the summed depth measurements _____ ft

Avg Cross Sectional Area

Multiply interval (A) by average summed depth (B) _____ ft^2

CORRECTED SURFACE VELOCITY

_____ ft/sec (Avg Surface Velocity) X 0.85 = _____ ft/sec

FLOW CALCULATION

_____ ft/sec (Corrected Surface Velocity) X _____ ft^2 (Avg Cross Sectional Area) = _____ ft^3/sec (CFS)

COMMENTS:

FOR OFFICE USE ONLY

STREAM HABITAT ASSESSMENT SHEET

SITE NAME: _____ **WBID:** _____ **SITE DATE:** _____

START POINT: _____ **SITE TIME:** _____

END POINT: _____ **SINUOSITY:** _____

INVESTIGATOR(S): _____ **DIRECTION:** **Upstream / Downs**

DIST	DEPTH			WIDTH		SUBSTRATE								HABITAT				IN-STREAM COVER (% AREA)									EMB	CAN	PtB	D/S
	L1/4	CTR	R1/4	WTR	BNK	SI&C	SND	GVL	CBL	BLD	BRK	POM	HPC	RI	PL	RU	DR	UCB	LWD	SWD	RTS	BRL	SAV	EAV	TV	CB&G				
20																														
40																														
60																														
80																														
100																														
120																														
140																														
160																														
180																														
200																														
220																														
240																														
260																														
280																														
300																														
320																														
340																														
360																														
380																														
400																														

STREAM HABITAT ASSESSMENT SHEET

SITE NAME: _____ **WBID:** _____ **SITE DATE:** _____

DIST	BV		DV		HT OF BANK		HT ERODED		LN ERODED		° SLOPE		RIP WIDTH		RIP COND		CATTLE				
	LEFT	RIGHT	LEFT	RIGHT	LEFT	RIGHT	LEFT	RIGHT	LEFT	RIGHT	LEFT	RIGHT	LEFT	RIGHT	LEFT	RIGHT	% TRAMPLED	# COW PIES	# TRAILS	AVG WIDTH	
20																					
40																					
60																					
80																					
100																					
120																					
140																					
160																					
180																					
200																					
220																					
240																					
260																					
280																					
300																					
320																					
340																					
360																					
380																					
400																					

COMMENTS