State of Oklahoma
Department of Central Services
Procurement Division

Solicitation

1. Solicitation #: 5800000528

2. Solicitation Issue Date: August 14, 2009

3. Brief Description of Requirement:

ADA COMPLIANT WALL HUNG TOILETS

4. Response Due Date[1]: August 25, 2009 **Time**: 4.00 PM CST/CDT

5. Issued By and RETURN SEALED BID TO[2]:

Dept. of Central Services - Procurement Division

- Location: 2401 N. Lincoln Blvd. Ste. 212, Oklahoma City, OK 73105
- Mailing Address: PO Box 53218, Oklahoma City, OK 73152-3218

6. Solicitation Type (check one below)**:**

☒ Invitation to Bid

☐ Request for Proposal

☐ Request for Quote

7. Requesting Agency: Facilities Management

8. Contracting Officer:

Name: Keith Hicks

Phone: 522-3790

Email: keith_hicks@dcs.state.ok.us

[1] Amendments to solicitation may change the Response Due Date (read GENERAL PROVISIONS, section 3, "Solicitation Amendments")
[2] Use "Location" for courier or personal deliveries, and "Mailing Address" for USPS

State of Oklahoma
Department of Central Services
Procurement Division

Responding Bidder Information

"Certification for Competitive Bid and Contract" (see page 3) ***MUST*** *be submitted along with the response to the Solicitation.*

1. **RE: Solicitation #** 5800000528

2. **Bidder General Information:**

FEI / SSN : _____ VEN ID: _____

Company Name: _____

3. **Bidder Contact Information:**

Address: _____

City: _____ State: ____ Zip Code: _____

Contact Name: _____

Contact Title: _____

Phone #: _____ FAX#: _____

Email: _____ Website: _____

4. **Oklahoma Sales Tax Permit[1]:**

☐ YES – Permit #: _____

☐ NO – Exempt pursuant to Oklahoma Laws or Rules

5. **Workers' Compensation Insurance Coverage:**

Bidder is required to provide with the bid a certificate of insurance showing proof of compliance with the Oklahoma Workers' Compensation Act.

☐ YES – include a certificate of insurance with the bid

☐ NO - attach a signed statement that provides specific details supporting the exemption you are claiming from the Workers' Compensation Act (Note: Pursuant to Attorney General Opinion #07-8, the exemption from 85 O.S. 2001, § 2.6 applies only to employers who are natural persons, such as sole proprietors, and does not apply to employers who are entities created by law, including but not limited to corporations, partnerships and limited liability companies.)[2]

[1] For frequently asked questions concerning Oklahoma Sales Tax Permit, see http://www.tax.ok.gov/faq/faqbussales.html
[2] For frequently asked questions concerning workers' compensation insurance, see http://www.ok.gov/oid/documents/WorkersComp.pdf

State of Oklahoma
Department of Central Services
Procurement Division

Certification for Competitive Bid and/or Contract
(Non-Collusion Certification)

In accordance with 74 O.S. § 85.22, a certification shall be included with any competitive bid or contract submitted to the State for goods or services.

Solicitation or Purchase Order #: 5800000528

Supplier Legal Name: _____

A. For purposes of competitive bid,

1. I am the duly authorized agent of the above named bidder submitting the competitive bid herewith, for the purpose of certifying the facts pertaining to the existence of collusion among bidders and between bidders and state officials or employees, as well as facts pertaining to the giving or offering of things of value to government personnel in return for special consideration in the letting of any contract pursuant to said bid;

2. I am fully aware of the facts and circumstances surrounding the making of the bid to which this statement is attached and have been personally and directly involved in the proceedings leading to the submission of such bid; and

3. Neither the bidder nor anyone subject to the bidder's direction or control has been a party:

a. to any collusion among bidders in restraint of freedom of competition by agreement to bid at a fixed price or to refrain from bidding,

b. to any collusion with any state official or employee as to quantity, quality or price in the prospective contract, or as to any other terms of such prospective contract, nor

c. in any discussions between bidders and any state official concerning exchange of money or other thing of value for special consideration in the letting of a contract.

B. I certify, if awarded the contract, whether competitively bid or not, neither the contractor nor anyone subject to the contractor's direction or control has paid, given or donated or agreed to pay, give or donate to any officer or employee of the State of Oklahoma any money or other thing of value, either directly or indirectly, in procuring this contract herein.

The undersigned, duly authorized agent for the above named supplier, by signing below acknowledges this certification statement is executed for the purposes of:

☐ the competitive bid attached herewith and contract, if awarded to said supplier;

OR

☐ the contract attached herewith, which was not competitively bid and awarded by the agency pursuant to applicable Oklahoma statutes.

Supplier Authorized Signature	Certified This Date
Printed Name	Title
Phone Number	Email
Fax Number	

State of Oklahoma
Department of Central Services
Procurement Division

Supplier Contract Affidavit

Solicitation #: 5800000528

_____, of lawful age, the duly authorized agent of:

_____, being first duly sworn, on oath says:

In accordance with 74 O.S. § 85.42(B), the supplier certifies that no person who has been involved in any manner in the development of this contract while employed by the State of Oklahoma shall be employed by the supplier to fulfill any of the services provided for under said contract.

_____	_____
Signature	Date
_____	_____
Printed Name	Title

STATE OF _____)
)
COUNTY OF _____)

Subscribed and sworn to before me this ____ day of _____, 20____, by _____

Notary Public (or Clerk or Judge) Signature _____

My Commission Number _____

My Commission Expires _____

GENERAL PROVISIONS

1. DEFINITIONS

As used herein, the following terms shall have the following meaning unless the context clearly indicates otherwise:

1.1. "Acquisition" means items, products, materials, supplies, services and equipment a state agency acquires by purchase, lease purchase, lease with option to purchase, or rental pursuant to the Oklahoma Central Purchasing Act;

1.2. "Bid" means an offer in the form of a bid, proposal or quote a bidder submits in response to a solicitation;

1.3. "Bidder" means an individual or business entity that submits a bid in response to solicitation;

1.4. "Solicitation" means a request or invitation by the State Purchasing Director or a state agency for a supplier to submit a priced offer to sell acquisitions to the state. A solicitation may be an invitation to bid, request for proposal, or a request for quotation; and

1.5. "Supplier" means an individual or business entity that sells or desires to sell acquisitions to state agencies.

2. BID SUBMISSION

2.1. Submitted bids shall be in strict conformity with the instructions to bidders, and shall be submitted with any other forms completed as required by the solicitation.

2.2. Bids shall be submitted to the procuring agency in a single envelope, package, or container and shall be sealed. The name and address of the bidder shall be inserted in the upper left corner of the single envelope, package, or container. SOLICITATION NUMBER AND SOLICITATION RESPONSE DUE DATE AND TIME MUST APPEAR ON THE FACE OF THE SINGLE ENVELOPE, PACKAGE, OR CONTAINER.

2.3. The required certification statement, "Certification for Competitive Bid and Contract (Non-Collusion Certification)", DCS-FORM-CP-004, must be made out in the name of the bidder and must be properly executed by an authorized person, with full knowledge and acceptance of all its provisions.

2.4. All bids shall be legibly written or typed. Any corrections to bids shall be initialed. Penciled bids and penciled corrections shall NOT be accepted and will be rejected as non-responsive.

2.5. All bids submitted shall be subject to the Oklahoma Central Purchasing Act, Central Purchasing Rules, and other statutory regulations as applicable, these General Provisions, any Special Provisions, solicitation specifications, required certification statement, and all other terms and conditions listed or attached herein—all of which are made part of this solicitation.

3. SOLICITATION AMENDMENTS

3.1. If an amendment is issued, then the bidder shall acknowledge receipt of any/all amendment(s) to solicitations by signing and returning the solicitation amendment(s). Amendment acknowledgement(s) may be submitted with the bid or may be forwarded separately. If forwarded separately, amendment acknowledgement(s) must contain the solicitation number and response due date and time on the front of the envelope. The procuring agency must receive the amendment acknowledgement(s) by the response due date and time specified for receipt of bids for the bid to be deemed responsive. Failure to acknowledge solicitation amendments may be grounds for rejection.

3.2. No oral statement of any person shall modify or otherwise affect the terms, conditions, or specifications stated in the solicitation. All amendments to the solicitation shall be made in writing by the procuring agency.

3.3. It is the Bidder's responsibility to check frequently for any possible amendments that may be issued. The procuring agency is not responsible for a bidder's failure to acquire any amendment documents required to complete a solicitation.

4. BID CHANGE

If the bidder needs to change a bid prior to the solicitation response due date, a new bid shall be submitted to the procuring agency with the following statement "This bid supersedes the bid previously submitted" in a single envelope, package, or container and shall be sealed. The name and address of the bidder shall be inserted in the upper left corner of the single envelope, package, or container. SOLICITATION NUMBER AND SOLICITATION RESPONSE DUE DATE AND TIME MUST APPEAR ON THE FACE OF THE SINGLE ENVELOPE, PACKAGE, OR CONTAINER.

5. CERTIFICATION REGARDING DEBARMENT, SUSPENSION, AND OTHER RESPONSIBILITY MATTERS

By submitting a response to this solicitation:

5.1. The prospective primary participant and any subcontractor certifies to the best of their knowledge and belief, that they and their principals or participants:

5.1.1. Are not presently debarred, suspended, proposed for debarment, declared ineligible, or voluntarily excluded by any Federal, State or local department or agency;

5.1.2. Have not within a three-year period preceding this proposal been convicted of or had a civil judgment rendered against them for commission of fraud or a criminal offense in connection with obtaining, attempting to obtain, or performing a public (Federal, State or local) contract; or for violation of Federal or State antitrust statutes or

commission of embezzlement, theft, forgery, bribery, falsification or destruction of records, making false statements, or receiving stolen property;

5.1.3. Are not presently indicted for or otherwise criminally or civilly charged by a governmental entity (Federal, State or local) with commission of any of the offenses enumerated in paragraph A.5.1.2. of this certification; and

5.1.4. Have not within a three-year period preceding this application/proposal had one or more public (Federal, State or local) contracts terminated for cause or default.

5.2. Where the prospective primary participant is unable to certify to any of the statements in this certification, such prospective participant shall attach an explanation to its solicitation response.

6. BID OPENING

Sealed bids shall be opened by the Department of Central Services - Procurement Division located at 2401 N. Lincoln Blvd. Ste. 212, Oklahoma City, OK 73105 at the time and date specified in the solicitation as the Response Due Date and Time.

7. BIDS SUBJECT TO PUBLIC DISCLOSURE

Unless otherwise specified in the Oklahoma Open Records Act, Central Purchasing Act, or other applicable law, documents and information a bidder submits as part of or in connection with a bid are public records and subject to disclosure. Bidders claiming any portion of their bid as proprietary or confidential must specifically identify what documents or portions of documents they consider confidential and identify applicable law supporting their claim of confidentiality. The Chief Administrative Officer of the requesting agency shall make the final decision as to whether the documentation or information is confidential.

8. LATE BIDS

Bids received by the procuring agency after the response due date and time shall be deemed non-responsive and shall NOT be considered for any resultant award.

9. LEGAL CONTRACT

9.1. Submitted bids are rendered as a legal offer and any bid, when accepted by the procuring agency, shall constitute a contract.

9.2. The Contract resulting from this solicitation will consist of the following documents in order of preference: Contract award documents, including but not limited to the Purchase Order, Contract Modifications, required certification statement, affidavit, and change orders; the solicitation including any amendments; and the successful bid to the extent that the bid does not conflict with the requirements of the Contract award documents or solicitation or applicable law. In the event there is a conflict between any of the preceding documents, the Contract award documents prevail over the solicitation, and both the Contract award documents and the solicitation shall prevail over the successful bid.

9.3. Any contract(s) awarded pursuant to the solicitation shall be legibly written or typed.

10. PRICING

10.1. Bids shall remain firm for a minimum of sixty (60) days from the solicitation closing date.

10.2. Bidders guarantee unit prices to be correct.

10.3. In accordance with 74 O.S. §85.40, ALL travel expenses to be incurred by the supplier in performance of the Contract shall be included in the total bid price/contract amount.

11. MANUFACTURERS' NAME AND APPROVED EQUIVALENTS

Unless otherwise specified in the solicitation, manufacturers' names, brand names, information and/or catalog numbers listed in a specification are for information and not intended to limit competition. Bidder may offer any brand for which they are an authorized representative, which meets or exceeds the specification for any item(s). However, if bids are based on equivalent products, indicate on the bid form the manufacturer's name and number. Bidder shall submit sketches, descriptive literature, and/or complete specifications with their bid. Reference to literature submitted with a previous bid will not satisfy this provision. The bidder shall also explain in detail the reason(s) why the proposed equivalent will meet the specifications and not be considered an exception thereto. Bids that do not comply with these requirements are subject to rejection.

12. CLARIFICATION OF SOLICITATION

Clarification pertaining to the contents of this solicitation shall be directed in writing to the Contracting Officer specified in the solicitation.

13. REJECTION OF BID

The State reserves the right to reject any bids that do not comply with the requirements and specifications of the solicitation. A bid may be rejected when the bidder imposes terms or conditions that would modify requirements of the solicitation or limit the bidder's liability to the State. Other possible reasons for rejection of bids are listed in OAC 580:15-4-11.

14. AWARD OF CONTRACT

14.1. The procuring agency may award the Contract to more than one bidder by awarding the Contract(s) by item or groups of items, or may award the Contract on an ALL OR NONE basis, whichever is deemed by the procuring agency to be in the best interest of the State of Oklahoma.

14.2. Contract awards will be made to the lowest and best bidder(s) unless the solicitation specifies that best value criteria is being used.

14.3. As required by State law, 74 O.S. § 85.42.B, the successful bidder will be required to properly execute and return to the procuring agency prior to the award of the contract, the "Supplier Contract Affidavit", DCS-FORM-CP-079, to certify that no person who has been involved in any manner in the development of that contract while employed by the State of Oklahoma shall be employed to fulfill any of the services provided for under said contract. FAILURE TO SUBMIT THE AFFIDAVIT WILL RESULT IN THE NULLIFICATION OF THE CONTRACT AWARD. The affidavit must be made out in the name of the bidder and must be properly executed by an authorized person, and notarized, with full knowledge and acceptance of all its provisions.

14.4. In order to receive payments from the State of Oklahoma, suppliers who are not registered on the State of Oklahoma Vendor Registration list must complete the "Vendor/Payee Form" (www.ok.gov/OSF/documents/osfvend.pdf). Non-U.S. suppliers who are not registered on the State of Oklahoma Vendor Registration List must complete a W-8BEN (www.irs.gov/pub/irs-pdf/fw8ben.pdf). Failure to do so may delay contract award.

15. CONTRACT MODIFICATION

15.1. The Contract is issued under the authority of the procuring agency who signs the Contract. The Contract may be modified only through a written Contract Modification, signed by the procuring agency approving official.

15.2. Any change to the Contract, including the addition of work or materials, the revision of payment terms, or the substitution of work or materials, directed by a person who is not specifically authorized by the procuring agency in writing, or made unilaterally by the Supplier, is a breach of the Contract. Unless otherwise specified by applicable law or rules, such changes, including unauthorized written Contract Modifications, shall be void and without effect, and the Supplier shall not be entitled to any claim under this Contract based on those changes. No oral statement of any person shall modify or otherwise affect the terms, conditions, or specifications stated in the resultant Contract.

16. DELIVERY, INSPECTION AND ACCEPTANCE

16.1. Unless otherwise specified in the solicitation or awarding documents, all deliveries shall be F.O.B. Destination. The bidder(s) awarded the Contract shall prepay all packaging, handling, shipping and delivery charges and firm prices quoted in the bid shall include all such charges. All products and/or services to be delivered pursuant to the Contract shall be subject to final inspection and acceptance by the State at destination. "Destination" shall mean delivered to the receiving dock or other point specified in the purchase order. The State assumes no responsibility for goods until accepted by the State at the receiving point in good condition. Title and risk of loss or damage to all items shall be the responsibility of the supplier until accepted by the receiving agency. The supplier(s) awarded the Contract shall be responsible for filing, processing, and collecting any and all damage claims accruing prior to acceptance.

16.2. Supplier(s) awarded the Contract shall be required to deliver products and services as bid on or before the required date. Deviations, substitutions or changes in products and services shall not be made unless expressly authorized in writing by the procuring agency.

17. INVOICING AND PAYMENT

17.1. Pursuant to 74 O.S. §85.44(B), invoices will be paid in arrears after products have been delivered or services provided.

17.2. Interest on late payments made by the State of Oklahoma is governed by 62 O.S. §41.4a and 62 O.S. §41.4b.

18. TAX EXEMPTION

Purchases by the State of Oklahoma are exempt from Oklahoma sales or use taxes and Federal excise tax. The procuring agency shall furnish tax exemption certificates upon written request.

19. AUDIT AND RECORDS CLAUSE

19.1. As used in this clause, "records" includes books, documents, accounting procedures and practices, and other data, regardless of type and regardless of whether such items are in written form, in the form of computer data, or in any other form. In accepting any Contract with the State, the successful bidder(s) agree any pertinent State or Federal agency will have the right to examine and audit all records relevant to execution and performance of the resultant Contract.

19.2. The successful bidder(s) awarded the Contract(s) is required to retain records relative to the Contract for the duration of the Contract and for a period of three years following completion and/or termination of the Contract. If an audit, litigation, or other action involving such records is started before the end of the three year period, the records are required to be maintained for three years from the date that all issues arising out of the action are resolved, or until the end of the three year retention period, whichever is later.

20. NON-APPROPRIATION CLAUSE

The terms of any Contract resulting from the solicitation and any Purchase Order issued for multiple years under the Contract are contingent upon sufficient appropriations being made by the Legislature or other appropriate government entity. Notwithstanding any language to the contrary in the solicitation, purchase order, or any other Contract document, the procuring agency may terminate its obligations under the Contract if sufficient appropriations are not made by the Legislature or other appropriate governing entity to pay amounts due for multiple year agreements. The Requesting (procuring) Agency's decisions as to whether sufficient appropriations are available shall be accepted by the supplier and shall be final and binding.

21. CHOICE OF LAW

Any claims, disputes, or litigation relating to the solicitation, or the execution, interpretation, performance, or enforcement of the Contract shall be governed by the laws of the State of Oklahoma.

22. CHOICE OF VENUE

Venue for any action, claim, dispute or litigation relating in any way to the Contract shall be in Oklahoma County, Oklahoma.

23. TERMINATION FOR CAUSE

23.1. The supplier may terminate the Contract for default or other just cause with a 30-day written request and upon written approval from the procuring agency. The State may terminate the Contract for default or any other just cause upon a 30-day written notification to the supplier.

23.2. The State may terminate the Contract immediately, without a 30-day written notice to the supplier, when violations are found to be an impediment to the function of an agency and detrimental to its cause, when conditions preclude the 30-day notice, or when the procuring agency determines that an administrative error occurred prior to Contract performance.

23.3. If the Contract is terminated, the State shall be liable only for payment for products and/or services delivered and accepted.

24. TERMINATION FOR CONVENIENCE

24.1. The State may terminate the Contract, in whole or in part, for convenience if the procuring agency determines that termination is in the State's best interest. The procuring agency shall terminate the Contract by delivering to the supplier a Notice of Termination for Convenience specifying the terms and effective date of Contract termination. The Contract termination date shall be a minimum of 60 days from the date the Notice of Termination for Convenience is issued by the procuring agency.

24.2. If the Contract is terminated, the State shall be liable only for products and/or services delivered and accepted, and for costs and expenses (exclusive of profit) reasonably incurred prior to the date upon which the Notice of Termination for Convenience was received by the supplier.

25. INSURANCE

The successful bidder(s) awarded the Contract shall obtain and retain insurance, including worker's compensation, automobile insurance, medical malpractice, and general liability, as applicable, or as required by State or Federal law, prior to commencement of any work in connection with the Contract. The supplier awarded the Contract shall timely renew the policies to be carried pursuant to this section throughout the term of the Contract and shall provide the procuring agency with evidence of such insurance and renewals.

26. EMPLOYMENT RELATIONSHIP

The Contract does not create an employment relationship. Individuals performing services required by this Contract are not employees of the State of Oklahoma or the procuring agency. The supplier's employees shall not be considered employees of the State of Oklahoma nor of the procuring agency for any purpose, and accordingly shall not be eligible for rights or benefits accruing to state employees.

27. COMPLIANCE WITH APPLICABLE LAWS

The products and services supplied under the Contract shall comply with all applicable federal, state and local laws, and the supplier shall maintain all applicable licenses and permit requirements.

28. SPECIAL PROVISIONS

Special Provisions set forth in SECTION B apply with the same force and effect as these General Provisions. However, conflicts or inconsistencies shall be resolved in favor of the Special Provisions.

SOLICITATION REQUEST

☐ Request for Quote ☐ Request for Proposal ☐ Request for Bid **Dispatch via Print**

Request Quote ID.	Date	Buyer	Page
5800000528	07/16/2009	Keith Hicks	1
Payment Terms	**DateTime Quote Open**	**Closing**	
0 Days	08/14/2009 03:09 PM	08/25/2009 04:00 PM	

Requisition Number Reference: From Req ID - 5800001438

Department of Central Services

DEPARTMENT OF CENTRAL SERVICES
2401 N LINCOLN, WILL ROGERS BLDG
OKLAHOMA CITY OK 73105

Ship To: DEPARTMENT OF CENTRAL SERVICES
SEE BELOW
OK

Vendor: NAME
Address:_____
Address:_____
City:_____ST:____ ZIP:_____

Bill To: DEPARTMENT OF CENTRAL SERVICES
ACCOUNTING DIVISION
PO BOX 53488
OKLAHOMA CITY OK 731123488

Line	Item # - Descr	Qty.	UOM	Supplier Responses Unit Cost	Ext. Cost
1	06705530 Model #3355.160.020: Closets, water	60	EA	_____	_____

Brand name_____

Brand No._____

Remarks:_____

Qty (60): American Standard Afwall One Piece Elongated commercial toilet (Model #3355.160.020) or using agency approved equivalent to be delivered complete with the following features:

-Wall-mounted flushometer valve toilet
-Vitreous china
-Low-consumption (6.0 Lpf/1.6 gpf)
-EverClean anti-microbial surface which inhibits the growth of stain and odor causing bacteria, mold, and mildew
-Elongated bowl
-Powerful direct-fed siphon jet action
-Fully-glazed 2-1/8" trapway
-10" x 12" water surface area
-Condensation channel
-1-1/2" inlet spud
-100% factory flush tested
-Color: white

Option #1: add 1 to 60 - price per each _____

Option #2: add 61 to 120 - price per each _____

Option #3: add 120 to 200 - price per each _____

Ship Qty (16) to: Agriculture Building - 2800 N. Lincoln, OKC, OK 73105
Ship Qty (32) to: Hodge Building - 2500 N. Lincoln, OKC, OK 73105
Ship Qty (12) to: Kerr-Edmondson Building - 440 S. Houston, Tulsa, OK 74127

Freight Terms: FOB DEST **Ship Via:** COMMON

Lead Time: _____

Supplier Remarks:

COMMENTS:
Non Binding Contract.

Indefinite Quantity Contract: This contract is for an indefinite quantity and the State may, or may not, buy the quantity mentioned in this contract. Vendor must clear all shipments with agency prior to shipping any portion of this contract.

Immediate cancellation shall be administered when violations are found to be an impediment to the function of the agency and detrimental to its cause.

This is NOT AN ORDER
All returned quotes and related documents must be identified with our request for quote Number.

Authorized Signature

SOLICITATION REQUEST

☐ Request for Quote ☐ Request for Proposal ☐ Request for Bid **Dispatch via Print**

Request Quote ID.	Date	Buyer	Page
5800000528	07/16/2009	Keith Hicks	2
Payment Terms	**DateTime Quote Open**	**Closing**	
0 Days	08/14/2009 03:09 PM	08/25/2009 04:00 PM	

Requisition Number Reference: From Req ID - 5800001438

Department of Central Services

DEPARTMENT OF CENTRAL SERVICES
2401 N LINCOLN, WILL ROGERS BLDG
OKLAHOMA CITY OK 73105

Ship To: DEPARTMENT OF CENTRAL SERVICES
SEE BELOW
OK

Vendor: NAME
Address:_____
Address:_____
City:_____ST:____ ZIP:_____

Bill To: DEPARTMENT OF CENTRAL SERVICES
ACCOUNTING DIVISION
PO BOX 53488
OKLAHOMA CITY OK 731123488

Supplier Responses

Line	Item # - Descr	Qty.	UOM	Unit Cost	Ext. Cost

Blank Page

This is NOT AN ORDER
All returned quotes and related documents must be identified with our request for quote Number.

Authorized Signature

SOLICITATION REQUEST

☐ Request for Quote ☐ Request for Proposal ☐ Request for Bid **Dispatch via Print**

Request Quote ID.	Date	Buyer	Page
5800000528	07/16/2009	Keith Hicks	3
Payment Terms	**DateTime Quote Open**	**Closing**	
0 Days	08/14/2009 03:09 PM	08/25/2009 04:00 PM	

Requisition Number Reference: From Req ID - 5800001438

Department of Central Services

DEPARTMENT OF CENTRAL SERVICES
2401 N LINCOLN, WILL ROGERS BLDG
OKLAHOMA CITY OK 73105

Ship To: DEPARTMENT OF CENTRAL SERVICES
SEE BELOW
OK

Vendor: NAME
Address:_____
Address:_____
City:_____ST:____ ZIP:_____

Bill To: DEPARTMENT OF CENTRAL SERVICES
ACCOUNTING DIVISION
PO BOX 53488
OKLAHOMA CITY OK 731123488

Supplier Responses

Line	Item # - Descr	Qty.	UOM	Unit Cost	Ext. Cost

PRICE REDUCTION: If at any time after the date of the bid the Contractor makes a general price reduction in the comparable price of any material covered by the contract to customers generally, an equivalent price reduction based on similar quantities and/or considerations shall apply to this contract for the duration of the contract period (or until the price is further reduced). Such price reduction shall be effective at the same time and in the same manner as the reduction in the price to customers generally. For purpose of this provision, a "general price reduction" shall mean any horizontal reduction in the price of an article or service offered (1) to Contractor's customers generally, or (2) in the Contractor's price schedule for the class of customers, i.e., wholesalers, jobbers, retailers, etc., which was used as the basis for bidding on this solicitation. An occasional sale at a lower price, or sale of distressed merchandise at a lower price, would not be considered a "general price reduction" under this provision. The Contractor shall submit their invoice at such reduced prices indicating on the invoice that the reduction is pursuant to the "Price Reduction" provision of the contract documents. The Contractor in addition will within ten days of any general price reduction notify the Purchasing Agent of such reduction by letter. FAILURE TO DO SO MAY REQUIRE TERMINATION OF THE CONTRACT.

Renewable Terms. The State shall have the option to renew this contract for one additional twelve-month period on the same terms and conditions.

Bids will only be considered when brochure/specifications are included with bid for evaluation.

Alternate bids will be considered. Submit brochure and complete specifications with bid.

Contract Period: Date of Award through June 30, 2010.

This is NOT AN ORDER
All returned quotes and related documents must be identified with our request for quote Number.

Authorized Signature

American Standard

AFWALL™ ADA RETROFIT 1.6 GPF FLUSHOMETER TOILET

BARRIER FREE

AFWALL™ ADA RETROFIT

- Wall-mounted flushometer valve toilet
- Vitreous china
- Low-consumption (6.0 Lpf/1.6 gpf)
- EverClean™ anti-microbial surface which inhibits the growth of stain and odor causing bacteria, mold, and mildew
- Elongated bowl
- Powerful direct-fed siphon jet action
- Fully-glazed 2-1/8" trapway
- 10" x 12" water surface area
- Condensation channel
- 1-1/2" inlet spud
- 100% factory flush tested

❑ **3355.160** Elongated bowl only, top spud
❑ **3356.160** Elongated bowl only, top spud with slotted rim for bedpan holding (White only)
❑ **3357.160** Elongated bowl only, back spud
❑ **3358.160** Elongated bowl only, back spud with slotted rim for bedpan holding (White only)

Afwall ADA 1.6 replaces standard wall-hung 3.5 GPF or 1.6 GPF models and roughs-in at 410mm (16-1/8") rim height **to meet ADA with no need to modify the existing carrier or through wall supply** (providing centerline of current outlet is 133mm [5-1/4"] above finished floor).

Component Parts:

❑ **047007-0070A** Inlet spud (furnished with bowl)
❑ **736046-100** Flushometer valve rough-in adapter kit (furnished with bowl)

Nominal Dimensions:
660 x 356 x 419mm
(26" x 14" x 16-1/2")

For Top spud bowls, American Standard kit #736046-100 Flushometer Valve Conversion Kit containing a 25mm (1") chrome-plated street ell, a vacuum breaker, and a 330mm (13") tail piece included to meet minimum 152mm (6") code between bowl and vacuum breaker.

Recommended working pressure–between 25 psi at valve when flushing and 80 psi static

Fixture only, less seat, carrier, bolt caps, and flush valve

Compliance Certifications -
Meets or Exceeds the Following Specifications:
- ASME A112.19.2 for Vitreous China Fixtures
- CAN/CSA International B45

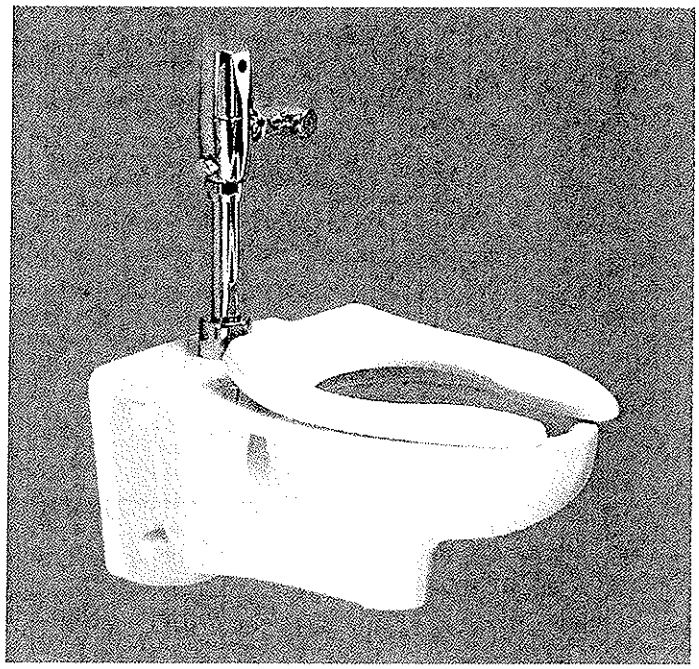

SEE REVERSE FOR ROUGHING-IN DIMENSIONS

To Be Specified:
❑ Color: ❑ White ❑ Bone ❑ Silver ❑ Linen
❑ Seat:
  ❑ American Standard #5901.100 Heavy duty open front less cover
  ❑ American Standard #5905.100 Extra heavy duty open front less cover
❑ Alternative Seat:
  ❑ Olsonite #95 open front seat less cover
  ❑ Church #9500C open front seat less cover
❑ Flushometer Valve:
  ❑ American Standard Selectronic™ #6065.161.002 (Top Spud) Available Nov. 1, 2007
  ❑ American Standard Selectronic™ #6065.262.007 (Concealed Back Spud) Available Nov. 1, 2007
❑ Alternative Flushometer Valve:
  ❑ Sloan Royal #111 (Top Spud)
  ❑ Sloan Royal #144-1.5 (Back Spud)

MEETS THE AMERICANS WITH DISABILITIES ACT GUIDELINES AND ANSI A117.1 REQUIREMENTS FOR ACCESSIBLE AND USABLE BUILDING FACILITIES - CHECK LOCAL CODES.
- When installed so top of seat is 432 to 483mm (17" to 19") from the finished floor.

© 2007 American Standard Inc.

American Standard

BARRIER FREE

AFWALL™ ADA RETROFIT 1.6 GPF FLUSHOMETER TOILET

3355.160/3356.160

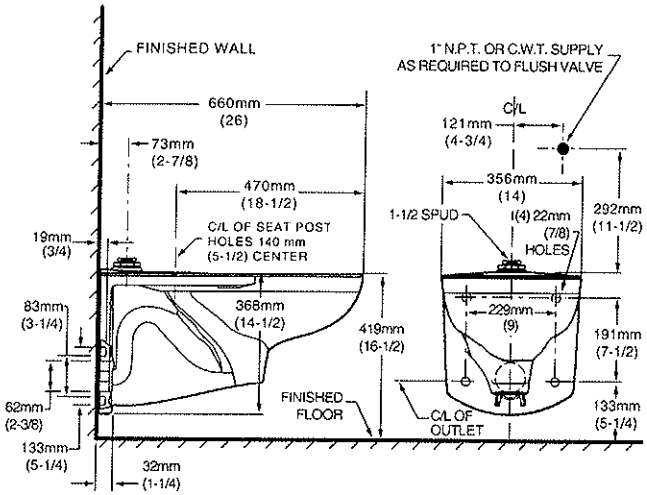

3357.160/3358.160

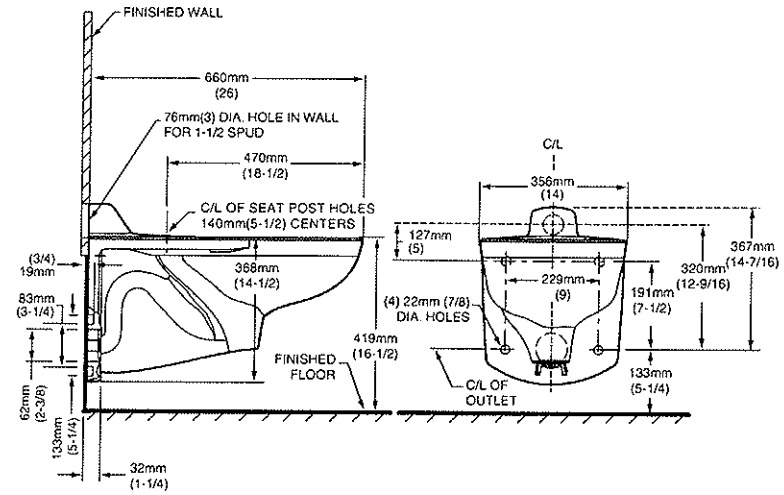

NOTES:

- **Toilet designed to meet ADA accessibility standards when top of seat height set at 432 to 483mm (17" to 19") from finished floor.**

PRODUCT 3355.160 AND 3357.160 SHOWN, 3356.160 AND 3358.160 SAME AS EXCEPT WITH SLOTTED RIM FOR BED PAN HOLDING.
* REQUIRES AMERICAN STANDARD KIT 736046-100 TO UPGRADE EXISTING INSTALLATION OF FLUSHOMETER VALVE AND COMPONENTS.
WASTE OUTLET SEAL RING MUST BE NEOPRENE OR GRAPHITE-FELT (WAX RING NOT RECOMMENDED).
SUGGESTED 1/16 CLEARANCE BETWEEN FACE OF WALL AND BACK OF BOWL.
TO COMPLY WITH AREA CODE GOVERNING THE HEIGHT OF VACUUM BREAKER ON THE FLUSHOMETER VALVE, THE PLUMBER MUST VERIFY DIMENSIONS SHOWN FOR SUPPLY ROUGHING.
FLUSHOMETER VALVE NOT INCLUDED WITH FIXTURE AND MUST BE ORDERED SEPARATELY.
CARRIER FITTING AS REQUIRED TO BE FURNISHED BY OTHERS.
PROVIDE SUITABLE REINFORCEMENT FOR ALL WALL SUPPORTS.

IMPORTANT: Dimensions of fixtures are nominal and may vary within the range of tolerances established by ANSI Standard A112.19.2.
These measurements are subject to change or cancellation. No responsibility is assumed for use of superseded or voided pages.

© 2007 American Standard Inc.